May 18, 1943 E. G. GAGE 2,319,594

SAFETY HIGH POTENTIAL ELECTRICAL SOURCE AND CIRCUIT

Filed April 20, 1940

Fig. 1.

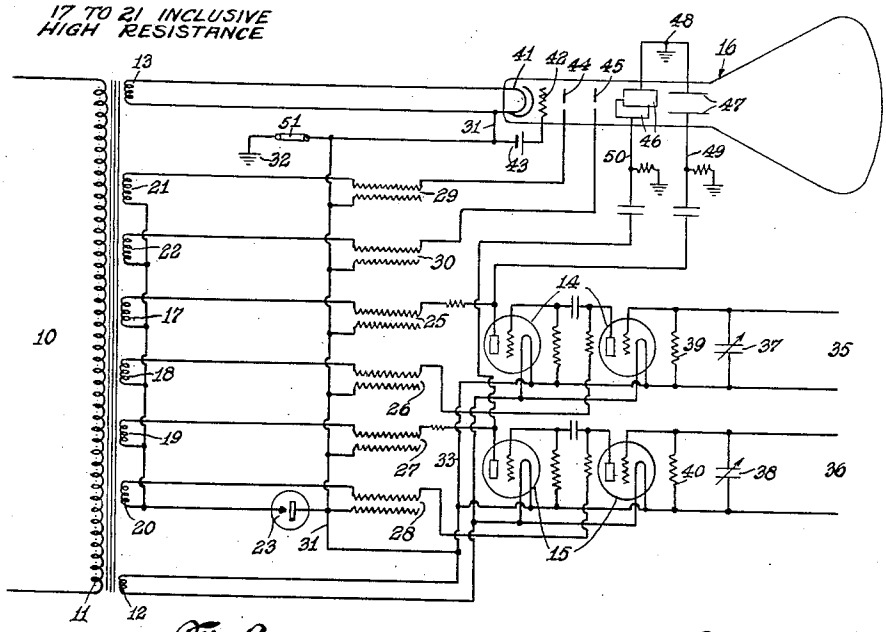

Fig. 2.

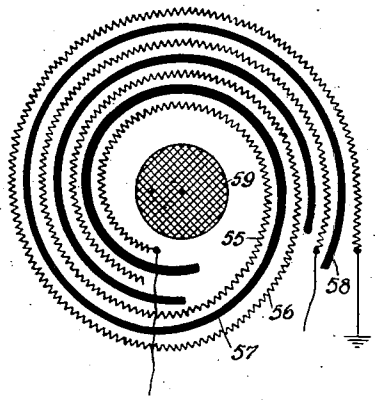

Fig. 4.

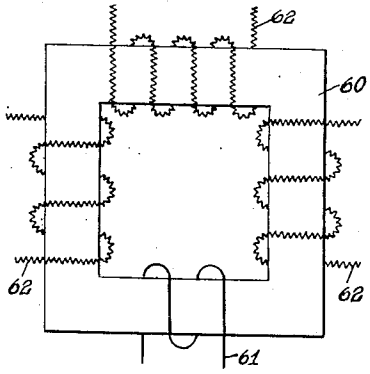

Fig. 3.

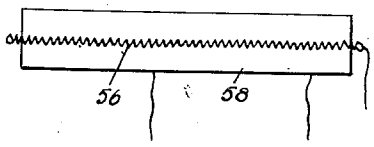

INVENTOR.
EDWARD G. GAGE

BY

ATTORNEY.

Patented May 18, 1943

2,319,594

UNITED STATES PATENT OFFICE

2,319,594

SAFETY HIGH POTENTIAL ELECTRICAL SOURCE AND CIRCUIT

Edward G. Gage, Brooklyn, N. Y., assignor, by direct and mesne assignments, of two-thirds to Leon Ottinger, New York, N. Y.

Application April 20, 1940, Serial No. 330,636

4 Claims. (Cl. 175—294)

This application is a continuation-in-part of my prior U. S. application Serial No. 292,993, now Patent No. 2,254,214, granted September 2, 1941. In this application I have disclosed a safety circuit for electrical devices employing dangerous voltages, supplied from a transformer which is provided with resistors of relatively high resistivity, the resistors being connected in series with the secondary winding of the transformer. A protective casing is then placed over both transformer and resistors, with terminals provided outside the casing. These resistors are of a value sufficiently low to permit the operation of an associated electrical device, but sufficiently high to prevent a dangerous current from flowing should the secondary circuit be contacted by the human body at any point at or connected with the said resistors outside the protective casing.

By this means a safety circuit is provided which allows safe handling of the circuits exteriorly to a transformer when the power is on.

To further insure safe handling of the associated circuits for servicing, etc., I have shown a special filter condenser arrangement including a protective casing, with resistors of relatively high resistivity in series with the input and output of the condenser. These resistors are of a value low enough to permit the required current to pass for the operation of the electrical device, usually a cathode ray tube or high impedance amplifier tube, but sufficiently high to prevent a dangerous current from passing from the filter condenser through the human body. As the resistors are located within the protective casing, it is not possible to contact the condenser electrodes directly, which might otherwise supply a dangerous current for a short time.

To further prevent accidental surge shock from the condenser, a high resistance leak resistor is connected within the casing in shunt with the condenser electrodes. This prevents the accumulation of a heavy residual charge, should the power supply be disconnected. A rectifier is inserted between the transformer and the condenser, and as it possesses unilateral conductivity, no current can flow out of the condenser through the rectifier or input circuit, should this portion of the circuit be contacted. It will therefore be seen that, irrespective of the portion of the circuit connected to the condenser terminals that may be contacted, only a small current, substantially of the same value as the operating current, can be drawn through the body. The value of this current is determined by the impedance of the electrical device employed which is preferably very high with relation to the impedance of the supply circuit. Such a condition exists in the anode circuits of a cathode ray tube. In the current supply thereto, there are, therefore, two main sources of dangerous potentials, i. e. the transformer secondary winding and the filter condensers.

The present invention has for an object, in circuits connected with a source of electrical potential supply of dangerous value, and connected with a high impedance electrical device, to provide for a novel construction of such supply means whereby when the source or circuits connected therewith are contacted by a human body, the current flow through the included portion of a circuit or supply and the body is limited to a safe value.

A further object of the invention is to provide a transformer supplying a dangerous voltage and constructed without a protective casing, the safety resistors being incorporated in the secondary winding itself, making it possible to contact any part of the transformer or circuit connected thereto without injury, while the power is on.

Another object is to provide a transformer which may be used to supply a plurality of dangerous high voltages with low current supply individually to a number of electrical devices, all circuits being harmless if contacted, and therefore permitting the safe handling of the entire associated apparatus or any portion thereof while the power is on.

Still another object is to provide a condenser supplying dangerous voltages and constructed wihout a protective casing, the safety resistors being incorporated in one or both of the electrodes themselves, making it possible to contact any part of the condenser or circuit connected thereto without injury, while the power is on.

The invention has for an object, also, to combine the impedance and capacity of a condenser filter circuit in the electrodes of the condenser itself.

Other and ancillary objects will hereinafter appear.

In carrying out the invention, a source of high potential supply such as the secondary of a transformer or the electrodes of a condenser is constructed of an elongated conductor of a resistivity such that contact by the human body with any portion of the said elongated conductor or circuit connected therewith will not result in a current of dangerous value flowing through the body.

To this end, the resistivity of the conductor,

while sufficiently high to prevent such flow, is also made sufficiently low to pass the required current for operating, at the rated voltage, apparatus connected in circuit with the said source.

The nature of the invention, however, will best be understood when described in connection with the accompanying drawing, in which

Fig. 1 is a diagrammatic view illustrating the application of my invention to the operation of a cathode ray tube.

Fig. 2 is a transverse section through a novel condenser as utilized therein; and Fig. 3 is an elevation thereof.

Fig. 4 is an elevation of a novel transformer as utilized in the operation, for example, of a cathode ray tube.

Referring to the drawing, more particularly Fig. 1, 10 indicates a source of alternating current which may for convenience be the usual 110-volt, 60-cycle A. C. supply connected with a primary winding 11 associated with a plurality of secondary windings 12 and 13 designating low-voltage secondary sections which may be used to supply filament currents to amplifiers 14 and 15 and a cathode ray tube 16, as hereinafter set forth. 17 designates another secondary section of very high voltage, which may be 1,000 volts, for use in the plate circuit of a tube of amplifier 14, and 18 is a similar section supplying a separate high voltage to its associated amplifier tube, which voltage may be 1,000 volts. Similarly, another secondary section 19 supplies voltage to one of the tubes of amplifier 15 and a secondary section 20, voltage to the other.

A further secondary section 21 supplies a high voltage to the first anode of the cathode ray tube, which may be of the order of magnitude of 1,000 volts, and a section 22, a higher voltage to the second anode of the cathode ray tube and which may be of the order of magnitude of 4,000 volts. A high voltage rectifier 23 suitable for rectifying the highest voltage of the series, in this case 4,000 volts, is included in circuit with all of the high voltage sections.

Interposed between the respective high voltage sections and the amplifier tubes and cathode ray tube anodes are respective filter condensers 25, 26, 27, 28, 29, and 30 of novel construction hereinafter more fully described. One electrode of each of these condensers as well as the anode of the rectifier 23 is connected to a common lead or return 31 which is grounded at 32 and serves also to ground a return 33 for one side of the filament heating circuits of the tubes of the amplifiers.

Input circuits 35 and 36 of vacuum tube amplifiers 14 and 15, which latter are of ultra high impedance especially for video circuits, are each provided with an input tuning condenser such as the condensers 37, 38, respectively.

The coupling resistance of the usual resistance coupled video amplifier is formed in this instance in whole or in part by the novel type of transformer and condenser with protective resistances, hereinafter more fully described; and which provide the necessary impedance, of the order of magnitude of 100,000 ohms, across the plate circuits of the first stage tubes of each amplifier.

Similarly, the second stage tubes of each amplifier have across their plate circuits the impedances of their transformers and condensers for coupling the output of these tubes to the respective deflecting plates of the cathode ray tube 16.

In the input circuits of the second stage tubes of each of the amplifiers 14, 15 are shown the usual high resistance leaks 39, 40 across grid to filament of these tubes.

The cathode ray tube 16 is indicated as provided with a filament 41 heated from the secondary section 13, with a control grid 42 with a negative bias battery 43, the filament 41 being normally grounded at 32. In addition, the tube 16 is also provided with a first anode 44 supplied with voltage from transformer secondary section 21 and with a second anode 45, supplied with voltage from the transformer secondary section 22. The vertical deflection plates 46 and the horizontal deflection plates 47 have one plate of each pair connected to ground as at 48 and the other plates of the pairs are connected respectively to the output leads 49 and 50 of the amplifiers 14 and 15. The particular cathode ray tube illustrated and herein described is the type having an ungrounded second anode and grounded filament. By the provision of a switch 51, which as shown serves to connect the filament 41 with the associated return lead 31 to ground, a cathode ray tube (not shown) having a grounded second anode may be substituted, switch 51 being opened to disconnect the filament ground connection.

The filter condensers utilized, for example, in the circuit hereinbefore described, are of the nature shown more particularly in Figs. 2 and 3 of the drawing, and comprise electrodes 55 and 56 which are of elongated conducting material in the form of very thin, narrow strips of high resistance metal or alloy such as "Nichrome," or a metallic film, or an extremely thin deposit of metal or carbon, or a conductive composition of both, with a dielectric 57 between two such electrodes. This dielectric may be heavy paraffined paper with an insulating follower such as an extra strip 58, all being wound spirally substantially into a cylindrical form as in the well-known rolled type of condenser. This form of condenser provides, of course, a certain degree of inductance which may be enhanced by the introduction of a central core 59 of iron. Because of the large number of turns due to the great length of the electrodes necessary to obtain a protective resistance value, the condenser may provide a high inductance even without the iron core.

It is to be understood that because the protective resistances 55 and 56 protect a person from injurious shock from the instantaneous surge discharge of the filter condenser only, and not from the transformer current, the resistance value of the electrode may be only one fourth that which would be necessary for a continuously applied current such as from the transformer. It has been found that the body can safely withstand an instantaneous current of approximately four times that of a continuously applied current. This allows for a corresponding reduction of protective resistance value necessary for safe handling of the condenser or connected circuit portion. The coiled form also prevents bodily contact with more than one electrode and thus adds to the safety feature provided by the inherent high resistance of the electrodes themselves.

Should two electrodes of such a condenser be bodily contacted, the shock received will be the result of current determined by the capacity of the condenser with the resistance included in series between the points of contact and the terminals of the electrodes. No casing about a

condenser is, therefore, required, nor is a shunt leak resistor necessary.

A suitable total resistance value of the elongated conductor forming a protective electrode of the condenser would be 20,000 ohms, measured from one end to the other, which is low enough to allow the condenser to act as a device to smooth out ripples but high enough to obviate objectionable capacity effects on the impedance coupling between stages of the thermionic tubes.

Assuming the length of the conductor or electrode to be, for example, one hundred feet having a width of one-half inch and having a capacity of 0.5 mfd., it will be apparent that to get the maximum surge charge voltage due to the total capacity of the electrodes through the body, a person would be obliged to contact the entire area of the electrode, a feat which is obviously impossible.

Contacting but a single point or at most a fraction of a square inch, as might happen accidentally, would place at all times a very high resistance between the person and the remaining portions of the electrode making up the total capacity, so that the maximum surge voltage transferred to the body without resistance in series would be determined by the area under contact, which, as just stated, would be but a fraction of a square inch. Such a small area could have but negligible capacity, consequently negligible current would pass.

Similarly, in the case of the transformer, in the practical application of my invention the safety resistors and protective casing for the transformer described in my prior application are replaced by a secondary winding or windings made of very fine high resistance wire, such as iron, German silver or "Nichrome" wire. Thus, as indicated in Fig. 4 of the drawing, about the core 60 is wound the primary 61 which is of the usual low resistance copper wire, while the secondaries 62 are composed of wire of a relatively high resistance, although, as hereinafter set forth, even copper wire may be utilized under certain conditions. In the particular circuit indicated in connection with the application of the novel type of transformer, a separate section of secondary winding is used for every high impedance device supplied with high voltage. By dividing up the secondary in this manner, the danger from the possibility of contacting a secondary winding of relatively low resistance and high voltage such as would be necessary if the devices were operated in parallel in the conventional manner, is avoided.

I have found that a suitable size of wire for the secondary sections may be #36 "Nichrome" wire having a resistance of 22 ohms per foot. By proper design of transformer, which is well understood, it is possible to provide the desired voltage by increasing the ratio of the number of turns of the secondary to those of the primary, which primary may be wound of copper wire in the conventional manner, the secondary affording in accordance with the present invention a resistance of the order of magnitude of some 200,000 ohms.

The difference between the novel safety secondary winding and the conventional secondary winding consists in the current limiting properties of the winding itself. Whereas with copper wire, if used, a practical limit is soon reached for the size and resistance of the secondary winding, determined by the low resistance of copper and its mechanical strength, a safety secondary winding of "Nichrome" wire may be made with the same size wire, namely #36, as a practical limit and have approximately fifty times the resistance, or, in other words, pass only one-fiftieth the current passed by a copper-wire-wound secondary of the same number of turns.

As an example, assuming that the electrical devices employed were to consist of video circuits including a cathode ray tube with first anode operating at 1,000 volts and 3 milliamperes, the second anode at 4,000 volts and 3 milliamperes, and four amplifier tubes, as shown, each operating at 500 volts and 5 milliamperes, the usual transformer secondary winding would have to pass in this case a current of 26 milliamperes which would closely approach a dangerous value and could not be handled with safety. With the safety secondary winding, however, employing the same cathode ray tube and ultra high impedance amplifier tubes operating at 1,000 volts and 2.5 milliamperes, and individually energized, the maximum current in any one secondary would be but three milliamperes, which is a safe value to handle.

The advantage is much more marked in the case of lower impedance devices such as the plate circuits of radio transmitters. In such a case, assuming the transmitter to consist of six or more tubes, the margin between danger and safety is very small, even with extremely high impedance transmitting tubes. Assuming, for example, that each of the tubes in such case draws 10 milliamperes plate current at 10,000 volts, a secondary of the conventional type would be required capable of passing a minimum of 60 milliamperes, a very dangerous current. With the safety circuit secondary winding, however, the minimum current required by any single section would be but 10 milliamperes, a safe current.

It is to be understood that the current passed through the human body, and not the voltage alone, is dangerous.

In addition to the current limitation by virtue of the character of the wire used in the winding, a further current limitation is provided by dividing up the secondary into a number of sections, each section then passing only a fraction of the total current that would be necessary in a single secondary of a transformer wound with copper wire and supplying all devices in parallel, in the conventional manner.

In order that each secondary section of the transformer may be isolated from the other secondary sections, the separate safety filter condensers and impedances are employed for each section of the secondary. Since a common return is used for all secondary sections, the single rectifier placed in the common return is sufficient. If desired, however, a separate rectifier for each section may be used.

Since the output resistances of each filter condenser may be of the order of 20,000 ohms, and prevents the passage of a dangerous current, any portion of both electrodes may be contacted by the human body and less than the maximum current, as determined by the value of the resistors, will flow through the body due to its added resistance of from 5,000 to 50,000 ohms.

The novel safety transformer, condenser, and associated circuits are preferably employed with electrical devices of extremely high impedance such as the anodic circuits of thermionic tubes; but I do not wish to limit myself to these circuits, since other devices may be used having

lower impedances and having circuits so arranged that they may employ larger currents and under certain circumstances, depending upon the physical characteristics of the human body, may be safely handled.

I claim:

1. The combination with an electrical circuit and apparatus of an impedance substantially greater than the normal resistance of the human body, permanently connected in the circuit and operating at a dangerously high potential but relatively small current; of a source of electrical potential supply of dangerous value for the circuit and apparatus and comprising an elongated coiled conducting element of the same material throughout its length, permanently connected in series in the apparatus circuit and of resistivity sufficiently low to pass the required current for operating the apparatus and of such high magnitude with respect to said voltage that, upon establishment of a closed circuit through the said source and the human body, the current flowing in such closed circuit and through the body and the voltage applied to the body are reduced by said resistivity to a safe value.

2. The combination with an electrical circuit and apparatus of an impedance substantially greater than the normal resistance of the human body, permanently connected in the circuit and operating at a dangerously high potential but relatively small current; of a source of electrical potential supply of dangerous value for the circuit and apparatus and comprising an elongated coiled conductor consisting of "Nichrome" wire permanently connected in series in the apparatus circuit and of resistivity sufficiently low to pass the required current for operating the apparatus and of such high magnitude with respect to said voltage that, upon establishment of a closed circuit through the said source and the human body, the current flowing in such closed circuit and through the body and the voltage applied to the body are reduced by said resistivity to a safe value.

3. The combination with an electrical circuit and apparatus of an impedance substantially greater than the normal resistance of the human body, permanently connected in the circuit and operating at a dangerously high potential but relatively small current; of a transformer having a secondary coil affording a potential supply of dangerous value for the circuit and apparatus, said secondary consisting of an electrical conductor connected in series in the circuit, of substantially the same resistivity throughout its length and of a total magnitude sufficiently low to pass the required current for operating the apparatus and of such high magnitude with respect to said voltage that, upon establishment of a closed circuit through the said source and the human body, the current flowing in such closed circuit and through the body and the voltage applied to the body are reduced by said resistivity to a safe value.

4. The combination with an electrical circuit and apparatus of an impedance substantially greater than the normal resistance of the human body, permanently connected in the circuit and operating at a dangerously high potential but relatively small current; of a transformer having a secondary coil affording a potential supply of dangerous value for the circuit and apparatus, said secondary consisting of "Nichrome" wire connected in series in the circuit, of substantially the same resistivity throughout its length and of a total magnitude sufficiently low to pass the required current for operating the apparatus and of such high magnitude with respect to said voltage that, upon establishment of a closed circuit through the said source and the human body, the current flowing in such closed circuit and through the body and the voltage applied to the body are reduced by said resistivity to a safe value.

EDWARD G. GAGE.