JAMES S. RANKIN'S

Jointed Beam for Supporting & Connecting School Desks.

No. 121,471. Patented Dec. 5, 1871.

FIG. I.

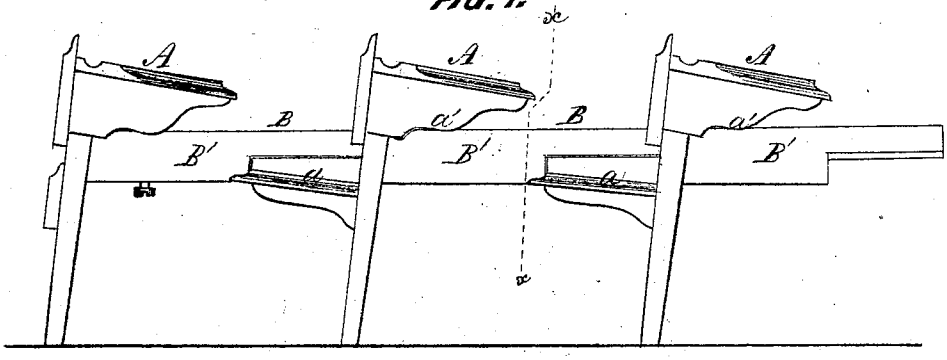

FIG. II.

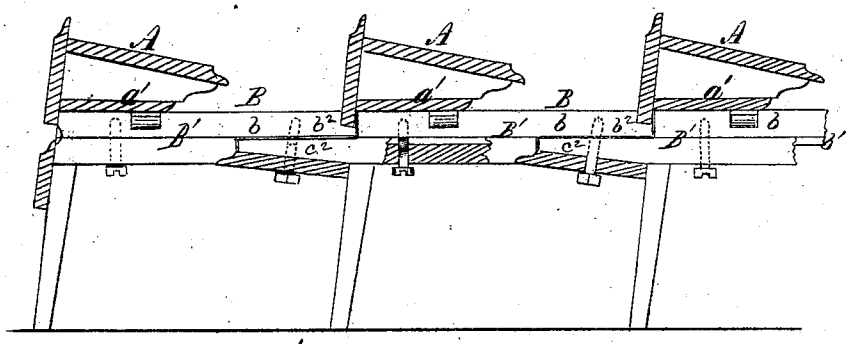

FIG. III.

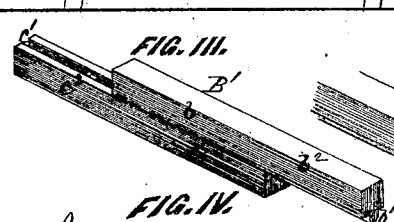

FIG. VI.



FIG. V.

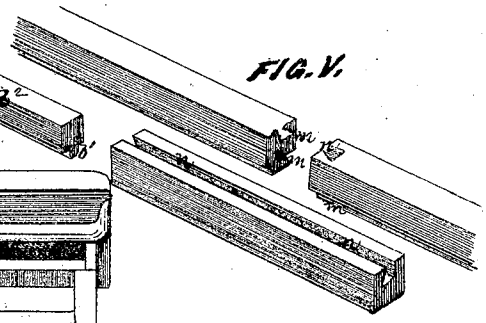

FIG. IV.

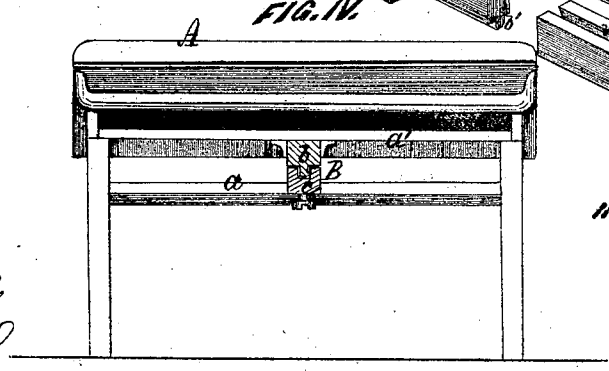

WITNESSES.

J. G. Grefenhagen

J. C. Peck

INVENTOR.

James S. Rankin

By Peck & Miatt

Attorneys

AM. PHOTO-LITHOGRAPHIC CO. N.Y. (OSBORNE'S PROCESS.)

UNITED STATES PATENT OFFICE.

JAMES S. RANKIN, OF MINNEAPOLIS, MINNESOTA.

IMPROVEMENT IN DEVICES FOR SUPPORTING AND CONNECTING SCHOOL-DESKS.

Specification forming part of Letters Patent No. 121,471, dated December 5, 1871.

To all whom it may concern:

Be it known that I, JAMES S. RANKIN, of the city of Minneapolis, in the county of Hennepin and State of Minnesota, have invented certain new and useful Improvements in Beams for Supporting and Connecting Desks, of which the following is a description:

This invention consists in forming the beam in convenient sections or lengths, which fit and are secured together, and in the peculiar manner of joining the parts, for the purpose hereinafter described.

In the drawing, Figure 1 is a side elevation of three school-desks connected in my improved manner; Fig. 2, a horizontal vertical section of the same; Fig. 3, a perspective view of a section of the beam detached; Fig. 4, a vertical cross-section in plane of line *x x*, Fig. 1; Fig. 5, a perspective view of several sections provided with dovetails and mortises; Fig. 6, a cross-section of two lengths as connected by dovetail and mortises.

A A A represent school-desks of ordinary construction, which are connected and supported in an upright position by a central horizontal beam, B. The latter is made in sections, preferably of the form shown at B′ B′ B′, which are respectively secured to separate desks between the seat *a* and under side of the desk-shelf *a′* in any suitable manner. These sections B B intermatch and are connected to each other to form a continuous beam.

I prefer to form and connect the different lengths in the following manner, although any other plan may be adopted that may be found convenient: An upper length, *b*, of the section B′, Fig. 2, is formed with a projecting tongue or tenon, b^1, which fits into a corresponding groove, c^1, cut in the upper edge of the length *c*. These two lengths *b c* overlap and are secured to each other a portion of their length, leaving ends b^2 c^2 projecting outward in opposite directions.

In use, one whole section, B′, is attached to each desk by securing the upper length *b* to the under side of the desk-shelf *a′*, and the lower length *c* to the upper side of the seat *a*. To connect and support the desks, the projecting ends b^2 of the upper lengths *b* are lapped over and matched with the ends c^2 of the lower lengths *c*, and firmly secured together by means of screws or other convenient methods, the tongue b^1 and groove c^1 insuring a close and reliable unity of parts. If desired, the different lengths *b c* need not be secured to each other, as described, until during the operation of setting up the desks, thus economizing space in transportation.

In some cases, to avoid the employment of screws and similar fastenings, and to render the parts more convenient to transport, put together, &c., I intend to provide the different lengths with vertical and horizontal dovetails and mortises *m m n n*, Figs. 5 and 6, and, in putting together, the horizontal connections are so arranged as to break joints with and lock the vertical connections. The beam may also be attached to the desk and seat in a similar manner, the numerous joints all combining to sustain and lock each other.

Among the many advantages secured by my construction may be mentioned its peculiar adaptation for packing and transportation, and the ease and rapidity with which the parts may be put together, forming a perfectly secure and reliable beam, possessing to all intents and purposes the advantages of an integral beam with none of its defects. By the use of short sections, as described, great economy is attained in both material and manufacture. Short lengths of lumber can be more easily procured, and there is less waste than when long lengths are employed. The short lengths can also be more quickly and conveniently handled, and admit of the substitution of machine for hand-work, heretofore employed. Another great advantage secured by my plan is that the danger from warping is reduced to a minimum, the long beams, when formed in one piece, as of old, frequently being rendered useless from this cause. As a result of the numerous advantages secured by my improved construction the cost of the whole is greatly reduced.

In the patent granted to me February 18, 1862, I claim a continuous wooden beam.

What I now claim as my invention, and desire to secure by Letters Patent, is—

The central beam B, formed of a series of sections by the combination of the upper lengths *b* and the under lengths *c*, constructed, substantially as described, for supporting and connecting a series of school-desks, as set forth.

In witness whereof I have hereunto signed my name in the presence of two subscribing witnesses.

JAMES S. RANKIN.

Witnesses:
GEO. W. MIATT,
J. B. GREIFENHAGEN.

(62)