July 24, 1956 F. J. GRALINSKI 2,755,523

SUN VISOR AWNING

Filed Jan. 15, 1954 2 Sheets-Sheet 1

Fig. 1.

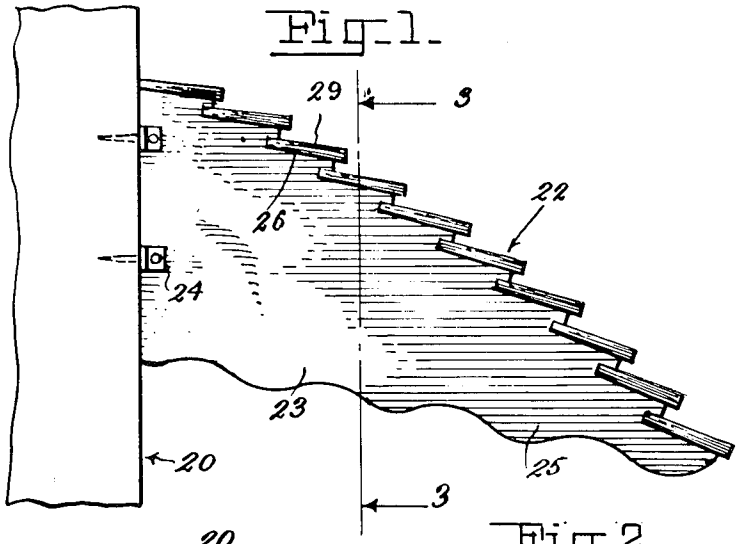

Fig. 2.

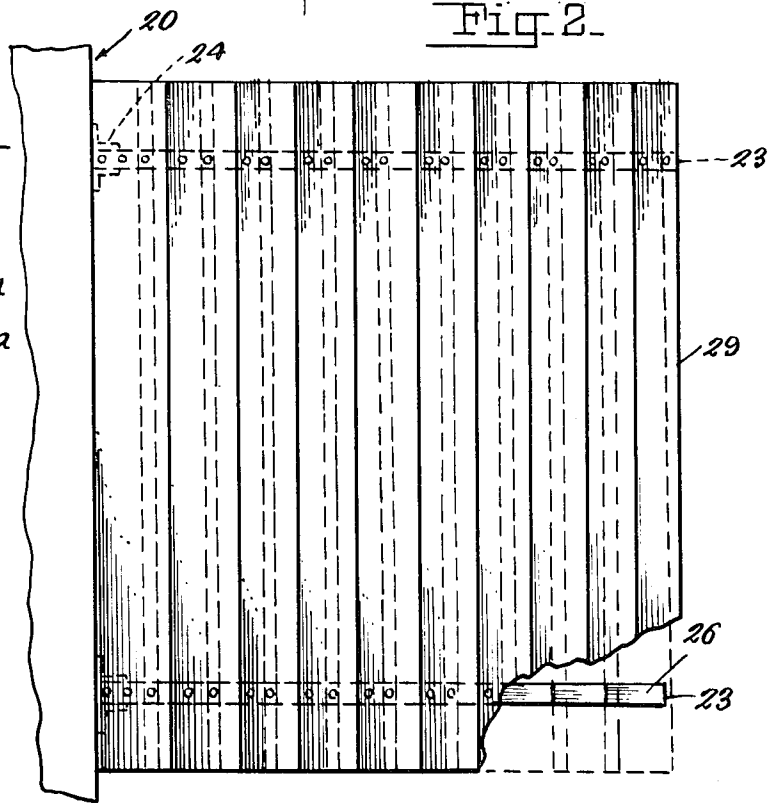

Fig. 3.

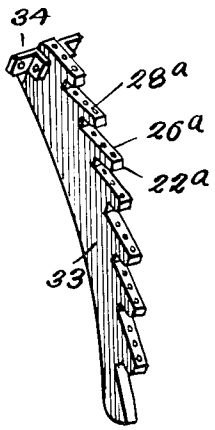

INVENTOR.
FRANK J. GRALINSKI

BY

Patrick D Beavers
ATTORNEY

July 24, 1956 F. J. GRALINSKI 2,755,523

SUN VISOR AWNING

Filed Jan. 15, 1954 2 Sheets-Sheet 2

Fig-3-

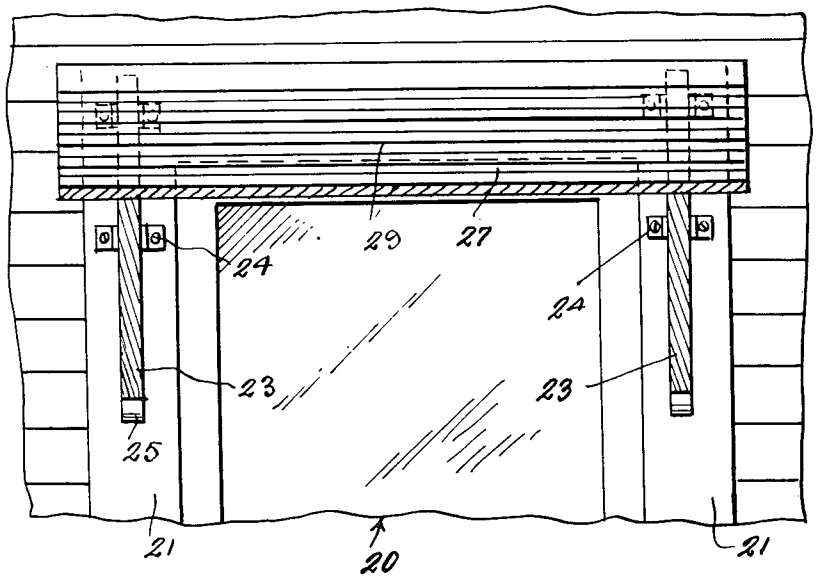

Fig-4-

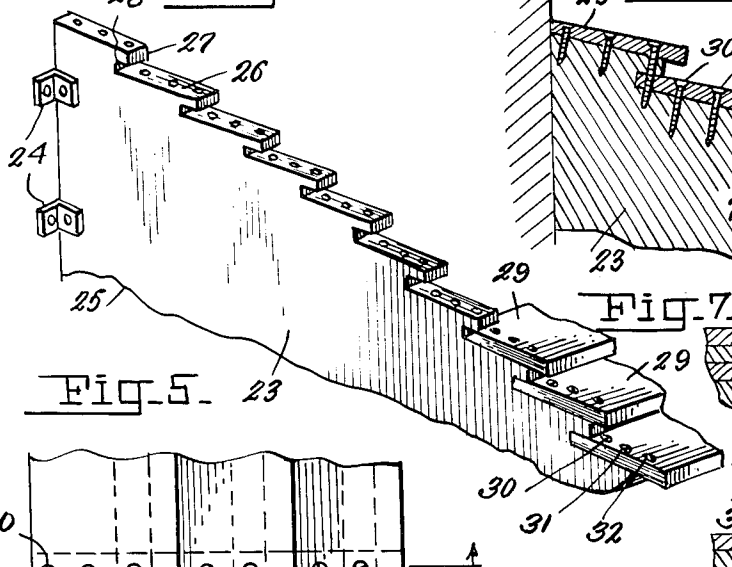

Fig-5-

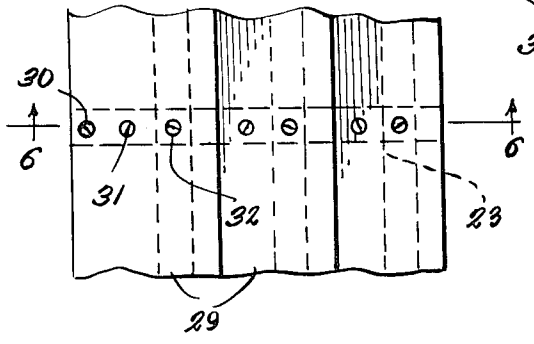

Fig-6-

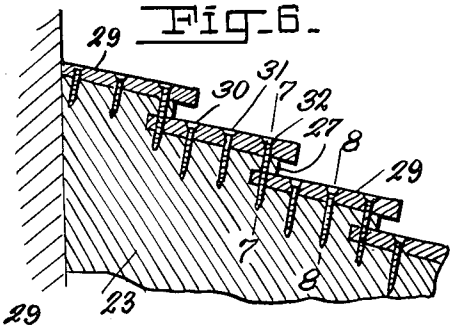

Fig-7-

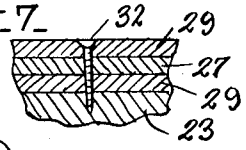

Fig-8-

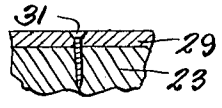

INVENTOR.
FRANK J. GRALINSKI

BY

Patrick D Beavers
ATTORNEY

United States Patent Office

2,755,523

Patented July 24, 1956

2,755,523

SUN VISOR AWNING

Frank J. Gralinski, Dearborn, Mich.

Application January 15, 1954, Serial No. 404,217

1 Claim. (Cl. 20—57.5)

This invention relates to improvements in awnings and more particularly to awnings or shade visors of the permanent type, that is, such as are used over windows and doorways.

The principal object of the present invention is to provide a permanent type awning which is constructed of two main parts namely the braces and the slats, this permitting manufacture and assembling by unskilled workmen, thus maintaining the cost low to promote a low retail price.

Another object of the invention is to provide an awning of the character stated which when once placed in position need not be removed, the year round.

A further object of the invention is to provide a permanent type awning for windows and doorways which may be of wood or plastic and colored to suit personal taste.

These and various other objects and advantages of the invention will become apparent to the reader of the following description.

In the drawings:

Figure 1 is a fragmentary end elevational view of the awning.

Figure 2 is a fragmentary top plan view of the portion broken away.

Figure 3 is a section taken on line 3—3 of Figure 1.

Figure 4 is a perspective view of one of the stepped braces showing fragmentarily some of the slats secured in place.

Figure 5 is a fragmentary top plan view of an intermediate portion of the awning.

Figure 6 is a fragmentary sectional view taken on line 6—6 of Figure 5.

Figure 7 is a fragmentary section taken on line 7—7 of Figure 6.

Figure 8 is a section taken on line 8—8 of Figure 6.

Figure 9 is a perspective view of an intermediate narrow brace to be used for wide windows.

Referring to the drawings wherein like numerals designate like parts, it can be seen that the numeral 20 generally refers to a window construction having a window frame including vertical frame members 21, 21. The present invention is generally referred to by numeral 22 and this normally includes a pair of brace structures 23, 23. The inner ends of these brace structures 23 are provided with angle brackets 24 apertured to receive securing elements for securing the braces 23 in position on the window frame portions 21, as shown in Figure 3. The lower edge of the brace structure 23 may be undulated or otherwise formed as at 25.

The upper edge of the brace structure 23 is stepped downwardly to its outer end, these step formations defining slat touching surfaces 26 and riser portions 27, these riser portions being undercut or notched as at 28.

In further carrying out the present invention, a plurality of slats 29 each of transverse taper are employed. It is preferable that the slat structure 23 at each of the surfaces 26 be drilled with openings to accommodate screws 30, 31 and 32. Incidentally, the screws 32 not only pass through the thick edge portions of the slat 29 but also through the underlying riser portions 27 and through the thin edge portion of the underlying slat 29 and into the main portion of the brace structure 23.

Thus it can be seen that the slats and brace structures 23 are firmly secured together and in the instance of a wide window where long slats must be employed, one or more intermediate brace arms (see Figure 9) denoted by numeral 33 can be employed. These brace members 33 are narrow and have angle brackets 34 at their inner ends for securing the same to the upper portions of the window frames.

The narrow intermediate brace 33 is further constructed to provide the steps having the surfaces 26*a*, notches 28*a* and risers 27*a*, as shown in the construction of the wider brace 23.

It can be seen that in constructing these awnings, all that is necessary is to take the measurement of the windows of a house. The only cutting required is on the slats and of course to facilitate matters the openings for the screws are preferably pre-bored.

As before stated, the awnings may be made entirely of some good durable wood or if desired of a plastic material.

It will also be understood that with the adjacent edges of the slats spaced, no warm air can collect under the awning. This awning construction will liberate all warm air from within its confines.

While the foregoing description sets forth the invention in specific terms, it is to be understood that numerous changes in the shape, size and materials may be resorted to without departing from the spirit and scope of the invention as claimed hereinafter.

Having described the invention what is claimed as new is:

A permanent awning comprising a pair of side braces for building side attaching, the top edges of the braces being formed to provide steps extending upwardly from the forward ends thereof, each of the steps having a top surface and a riser portion, said riser portions being notched inwardly at the lower portions thereof, slats bridging the braces and corresponding top surfaces, said slats outer and inner longitudinal edge portions, the inner edge portions of the slats being disposed into the notched portions of the riser portions of the side braces, securing elements disposed downwardly through the slats and top surfaces and into the braces to secure the slats in position, and additional securing elements disposed through the outer longitudinal edge portions of the slats and down through the notched portions of the risers to pass through the inner longitudinal edge portions of the slats and the brace members to more thoroughly secure the slats in position on the braces.

References Cited in the file of this patent

UNITED STATES PATENTS

2,394,736	Adelsperger	Feb. 12, 1946
2,595,612	Snider et al.	May 6, 1952
2,614,299	Lowe	Oct. 21, 1952