(12) INTERNATIONAL APPLICATION PUBLISHED UNDER THE PATENT COOPERATION TREATY (PCT)

(19) World Intellectual Property Organization
International Bureau

(43) International Publication Date
3 March 2011 (03.03.2011)

PCT

(10) International Publication Number
WO 2011/025449 Al

(51) International Patent Classification:
BOIL 3/14 (2006.01)

(21) International Application Number:
PCT/SE20 10/0509 11

(22) International Filing Date:
24 August 2010 (24.08.2010)

(25) Filing Language: English

(26) Publication Language: English

(30) Priority Data:
095061 1-4 26 August 2009 (26.08.2009) SE

(71) Applicant *(for all designated States except US):* **GE HEALTHCARE BIO-SCIENCES AB** [SE/SE]; Patent Department, Bj δrkgatan 30, S-751 84 Uppsala (SE).

(72) Inventors; and
(75) Inventors/Applicants *(for US only):* **ROSENGREN, Lars** [SE/SE]; GE Healthcare, Bj δrkgatan 30, S-75 1 84 Uppsala (SE). **SVENSSON, Johan** [SE/SE]; GE Healthcare, Bj δrkgatan 30, S-75 1 84 Uppsala (SE). AGREN, **Tomas** [SE/SE]; GE Healthcare, Bj δrkgatan 30, S-75 1 84 Uppsala (SE). ÖSMARK, **Mathias** [SE/SE]; Frδsundaleden 2, S-169 99 Solna (SE). STRÖMBERG, **Per** [SE/SE]; Banergatan 10 b, S-752 37 Uppsala (SE).

(74) Agents: GE HEALTHCARE BIO-SCIENCES AB et al.; Patent Department, Bj δrkgatan 30, S-75 1 84 Uppsala (SE).

(81) Designated States *(unless otherwise indicated, for every kind of national protection available):* AE, AG, AL, AM, AO, AT, AU, AZ, BA, BB, BG, BH, BR, BW, BY, BZ, CA, CH, CL, CN, CO, CR, CU, CZ, DE, DK, DM, DO, DZ, EC, EE, EG, ES, FI, GB, GD, GE, GH, GM, GT, HN, HR, HU, ID, IL, IN, IS, JP, KE, KG, KM, KN, KP, KR, KZ, LA, LC, LK, LR, LS, LT, LU, LY, MA, MD, ME, MG, MK, MN, MW, MX, MY, MZ, NA, NG, NI, NO, NZ, OM, PE, PG, PH, PL, PT, RO, RS, RU, SC, SD, SE, SG, SK, SL, SM, ST, SV, SY, TH, TJ, TM, TN, TR, TT, TZ, UA, UG, US, UZ, VC, VN, ZA, ZM, ZW.

(84) Designated States *(unless otherwise indicated, for every kind of regional protection available):* ARIPO (BW, GH, GM, KE, LR, LS, MW, MZ, NA, SD, SL, SZ, TZ, UG, ZM, ZW), Eurasian (AM, AZ, BY, KG, KZ, MD, RU, TJ, TM), European (AL, AT, BE, BG, CH, CY, CZ, DE, DK, EE, ES, FI, FR, GB, GR, HR, HU, IE, IS, **IT,** LT, LU, LV, MC, MK, MT, NL, NO, PL, PT, RO, SE, SI, SK, SM, TR), OAPI (BF, BJ, CF, CG, CI, CM, GA, GN, GQ, GW, ML, MR, NE, SN, TD, TG).

Published:

— *with international search report (Art. 21(3))*

(54) Title: LIQUID RECEPTACLE

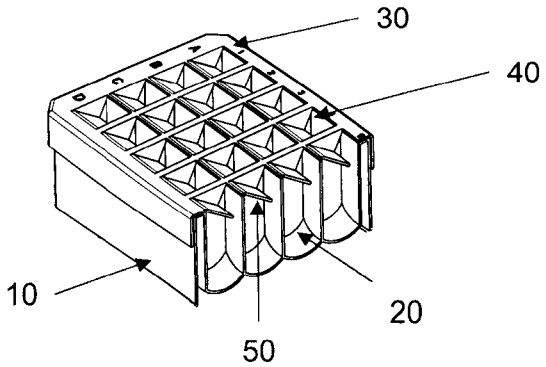

Fig. 1

(57) Abstract: Liquid receptacle with an opening for receiving liquid dispensed at a distance there above, wherein the receptacle comprises a liquid receiving member arranged in the vicinity of the opening and at an angle with respect to the motion of dispensed liquid to receive and direct dispensed liquid into the receptacle.

WO 2011/025449 A1

LIQUID RECEPTACLE

Technical field of the invention.

The present invention pertains to the field of liquid receptacles, particularly to liquid receptacles for receiving liquid dispensed at a distance there above.

Technical back-ground of the invention.

In many situations, such as in many types of fraction collectors, liquid is dispensed at a distance above the receptacle. When liquid is dispensed from a nozzle as a stream or in the form of drops are into a receptacle or vessel containing liquid, there are often minute droplets generated, that actually may fly up higher than the entrance opening of the receptacle. Such droplets may in fact reach the nozzle and foul it. In the case of fraction collectors, this can be seen as salt stains on the fraction dispensing nozzle, particularly with high salt eluents. These stains can constitute a problem, as they disrupt nozzle functions, such as optical sensor arrangements or the like located at the nozzle. Another, in some cases more severe, consequence of these droplets could occur if they jump over to a nearby tube or well. It has been found that up to 0,1 ‰ or more of the supposed contents of a well may be found in another nearby well, in a normal fractionation case in a 96 well Deep Well plate as a result of this "splashing" effect. In an extremely sensitive application this could be devastating.

The reasons for this effect are suggested to be both mechanical and electrostatic. As the droplet strikes a liquid surface a shower of minute droplets are created. Most of these fall directly back into the liquid, but some of them can fly as high as out of the well or tube. According to an electrostatic theory, if the liquid in the well and the drop together has a high enough charge, positive or negative, there is a chance that the small droplet created at impact is repelled by the static liquid, hence "pushed" out of the well/ tube.

Summary **of the invention.**

The object of the invention is to provide a new liquid receptacle and liquid receptacle lid, which overcomes one or more drawbacks of the prior art. This is achieved by the liquid receptacle and liquid receptacle lid as defined in the independent claims.
One advantage with such a liquid receptacle is that creation of droplets by the splash effect is minimized by reducing the energy of the drop impact upon entrance to the receptacle.

Further scope and applicability of the present invention will become apparent from the detailed description given hereinafter. However it should be understood that a detailed description and specific examples while indicating preferred embodiments of the invention are given by illustrations only. There are changes and modifications in the spirit and scope of the invention which will become apparent to those skilled in the art from the detailed description below.

Brief description of **the** drawings.

The present invention will be more fully understood from the detailed description given herein including the accompanying drawings which are given by way of illustration only and thus are not limiting the present invention and in which:

Fig. 1 is a perspective view of a well plate with a liquid receptacle lid according to the present invention;

Fig. 2 is a perspective view of a test tube cassette with a liquid receptacle lid;

Figs. 3a and 3b schematically illustrates a liquid receptacle in the form of a well plate.

Detailed description embodiments.

According to one embodiment, there is provided a liquid receptacle with an opening for receiving liquid dispensed at a distance there above, e.g. drops/stream from a fraction collector

nozzle. In order to reduce the energy of the dispensed liquid impact upon entrance to the receptacle, the receptacle comprises a liquid receiving member arranged in the vicinity of the opening and at an angle with respect to the motion of dispensed liquid to receive and direct dispensed liquid into the receptacle. As mentioned above, the disclosed liquid receptacle is suitable to be used as a fraction collection receptacle in fraction collectors, but it may be used in any application wherein a lab receptacle is arranged to receive liquid dispensed at a distance there above, especially when the receptacle is a part of an array of receptacles such as a well in a well plate with a plurality of wells, or a test tube in a cassette with a plurality of test tubes.

In the embodiments disclosed in figs 1 and 2, the liquid receiving member is formed in a lid attached to the top of the liquid receptacle. In fig. 1 a plurality liquid receptacles are provided in the form of an array of wells 20 in a well plate 10. Such well plates 10 are commonly used in the field of lab scale liquid handling and are available in a large number of formats and configurations. A splash preventing lid 30 is formed to be arranged on top of the well plate 10 and it comprises a plurality of openings 40, each associated with a well in the well plate 10. At each opening 40, there is provided a liquid receiving member 50 to receive and direct dispensed liquid into the associated well 20.

In fig. 2 there is shown a cassette 60 supporting a plurality of test tubes 70 in an array pattern. A splash preventing lid 80 arranged to be placed on top of the test tube cassette assembly. The lid comprises a plurality of openings 90, each associated with a test tube 70 in the cassette 60. At each opening 90, there is provided a funnel shaped liquid receiving member 100 to receive and direct dispensed liquid into the associated test tube 70.

The lids 30, 80 will also serve as just lids, preventing any droplets from leaving the receptacle from below. After the liquid dispensing operation the lid may be removed to provide a larger access opening to the liquid receptacles in order to withdraw liquid there from e.g. using an auto-sampler or the like.

In the embodiment disclosed in figs 3a and 3b, the liquid receiving member is of the liquid receptacle. Figs. 3a and 3b shows a well plate 110 wherein each well 120 is provided with an integrated liquid receiving member 130 formed as an integrated part of the well plate 110. Fig. 3b shows one well 120 partially transparent to illustrate the interior design of the well. In

the disclosed embodiment, the liquid receiving member 130 is a curved surface providing an inclined liquid reception surface. The liquid receiving member 130 is provided with an elongated division member 140, dividing the well 120 into two compartments 150a and 150b with a communication opening 160 at the bottom portion of the well 120. By this design the well plate may be handled in a tilted position with edge 170 downwards if desired, as long as the liquid volume in each well is less than the volume of compartment 150b, or even upside down if turned over in the correct way. As is shown in this embodiment, the free opening area for access to the well needs to be large enough to provide access to the liquid dispensed therein.

As is shown in figs. 1-3, the liquid receiving member 50, 90 is arranged to provide an inclined surface for the droplet to hit. Since the drop hits the inclined surface at an angle, most energy is lost at the impact without creating these minute droplets. The drop subsequently slides down the plane, and either reaches the wall to slide down against, or falls directly to the bottom, but now from a much lower distance, hence creating a lot less droplets at impact. In order to achieve the desired reduction of energy of the impact of the dispensed liquid, the liquid receiving member may be arranged at an angle less than 6Oo and more than 30o with respect to the motion of dispensed liquid. As is exemplified by the figs., the liquid receiving member may be of any suitable shape capable of reducing the impact energy of dispensed liquid.

In order to achieve the desired effect of reduced creation of droplets, the dispensing of liquid have to be controlled so that dispensed liquid, hits the liquid receiving member before it reaches the liquid compartment of the well or tube. In order to promote this for liquid receptacles with a small liquid opening, such as well plates with a large number of wells, the liquid receiving members are preferably formed in a lid and they preferabl covers an area exceeding 50% of the opening.

We claim:

1. Liquid receptacle with an opening for receiving liquid dispensed at a distance there above, wherein the receptacle comprises a liquid receiving member arranged in the vicinity of the opening and at an angle with respect to the motion of dispensed liquid to receive and direct dispensed liquid into the receptacle.

2. Liquid receptacle according to claim 1 wherein the liquid receiving member is formed in a lid attached to the top of the liquid receptacle.

3. Liquid receptacle according to claim 1 wherein the liquid receiving member is formed as an integrated part of the liquid receptacle.

4. Liquid receptacle according to claim 1 wherein it is a fraction collection receptacle.

5. Liquid receptacle according to claim 1 wherein it is a well in a well plate comprising a plurality of wells.

6. Liquid receptacle according to claim 1 wherein it is a test tube.

7. Liquid receptacle according to claim 1 wherein the liquid receiving member cover an area exceeding 50% of the opening.

8. Liquid receptacle according to claim 1 wherein the liquid receiving member is arranged at an angle less than 60° and more than 30° with respect to the motion of dispensed liquid.

9. Liquid receptacle lid to be arranged on a liquid receptacle, with an opening for receiving liquid dispensed at a distance there above and for directing said liquid into the liquid receptacle, wherein the lid comprises a liquid receiving member arranged in the vicinity of the opening and at an angle with respect to the motion of dispensed liquid to receive and direct dispensed liquid into the receptacle.

10. Liquid receptacle lid according to claim 8 comprising a plurality of openings each to be associated with a liquid receptacle in an array of receptacles

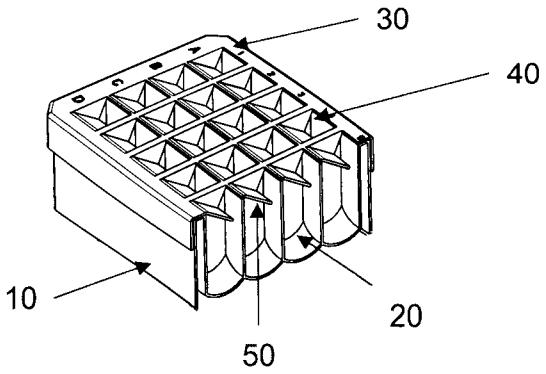

Fig. 1

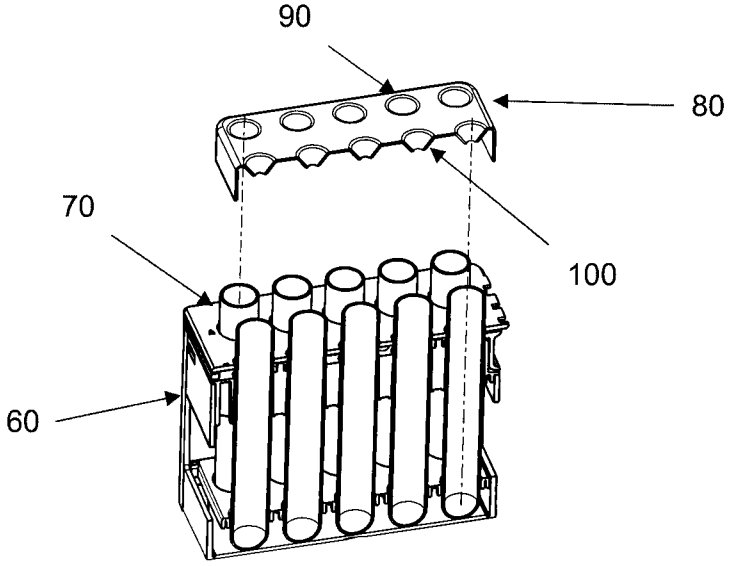

Fig. 2

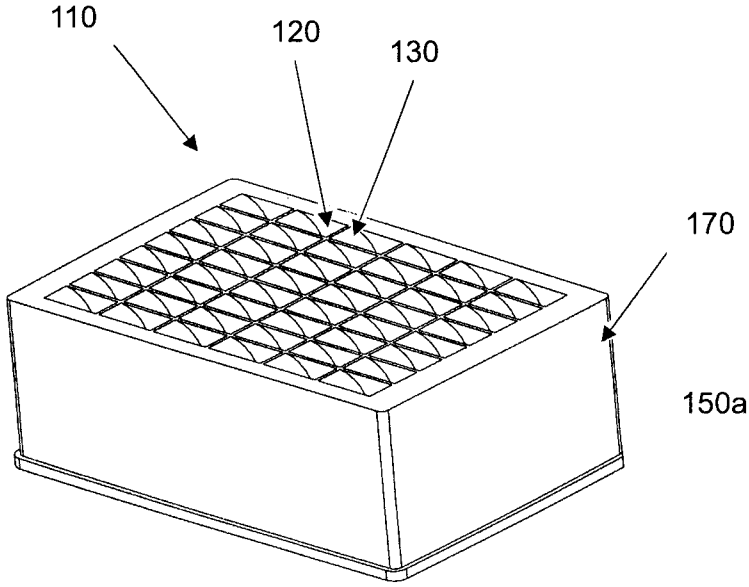

Fig. 3a

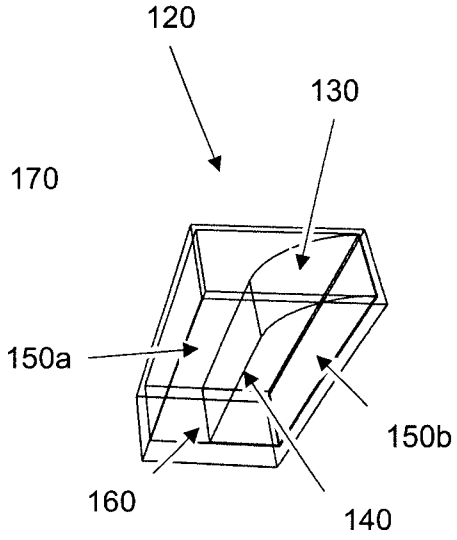

Fig. 3b

INTERNATIONAL SEARCH REPORT

International application No.
PCT/SE2010/050911

A. CLASSIFICATION OF SUBJECT MATTER

IPC: see extra sheet

According to International Patent Classification (IPC) or to both national classification and IPC

B. FIELDS SEARCHED

Minimum documentation searched (classification system followed by classification symbols)

IPC:B01L, B67C, G01N

Documentation searched other than minimum documentation to the extent that such documents are included in the fields searched

SE, DK, FI, NO classes as above

Electronic data base consulted during the international search (name of data base and, where practicable, search terms used)

EPO-Internal, PAJ, WPI data, BIOSIS, COMPENDEX, EMBASE, INSPEC, PUBCHEM, internet

C. DOCUMENTS CONSIDERED TO BE RELEVANT

Category*	Citation of document, with indication, where appropriate, of the relevant passages	Relevant to claim No.
X	WO 0112326 A1 (SPECTRUMEDIX CORP), 22 February 2001 (2001-02-22); pages 3-5, 7-8; figures 3a,3f,11a,11f,12a,12f --	1-10
X	US 4049031 A1 (COOPER DAVID J ET AL), 20 September 1977 (1977-09-20); abstract; figure 1 --	1-2, 4, 6-9
X	US 6660149 B1 (KARGER BARRY L ET AL), 9 December 2003 (2003-12-09); abstract; figure 10 -- ----------	1, 3-6, 8

☐ Further documents are listed in the continuation of Box C. ☒ See patent family annex.

* Special categories of cited documents:

"A" document defining the general state of the art which is not considered to be of particular relevance

"E" earlier application or patent but published on or after the international filing date

"L" document which may throw doubts on priority claim(s) or which is cited to establish the publication date of another citation or other special reason (as specified)

"O" document referring to an oral disclosure, use, exhibition or other means

"P" document published prior to the international filing date but later than the priority date claimed

"T" later document published after the international filing date or priority date and not in conflict with the application but cited to understand the principle or theory underlying the invention

"X" document of particular relevance; the claimed invention cannot be considered novel or cannot be considered to involve an inventive step when the document is taken alone

"Y" document of particular relevance; the claimed invention cannot be considered to involve an inventive step when the document is combined with one or more other such documents, such combination being obvious to a person skilled in the art

"&" document member of the same patent family

Date of the actual completion of the international search	Date of mailing of the international search report
18-10-2010	20-10-2010
Name and mailing address of the ISA/SE Patent- och registreringsverket Box 5055 S-102 42 STOCKHOLM Facsimile No. +46 8 666 02 86	Authorized officer Magnus Hallberg Telephone No. +46 8 782 25 00

Continuation of: second sheet

International Patent Classification (IPC)

B01L 3/14 (2006.01)

Download your patent documents at www.prv.se

The cited patent documents can be downloaded:

- From "Cited documents" found under our online services at www.pry.se (English version)
- From "Anfórda dokument" found under "e-tjanster" at www.prv.se (Swedish version)

Use the application number as username. The password is **BIHIWWNKLH.**

Paper copies can be ordered at a cost of 50 SEK per copy from PRV InterPat (telephone number 08-782 28 85).

Cited literature, if any, will be enclosed in paper form.

INTERNATIONAL SEARCH REPORT
Information on patent family members

International application No.
PCT/SE201 0/05091 1

WO	0 1 12326	Al	22/02/2001	**us**	6241 949	B 1	05/06/2001
us	4049031	A	20/09/1 977	NONE			
US	66601 49	B 1	09/1 2/2003	US	7578915	B2	25/08/2009
				US	7323092	B2	29/01/2008
				US	20040040850	A 1	04/03/2004
				US	20040040851	A 1	04/03/2004