June 18, 1929. G. F. WALTER 1,717,590

METHOD AND APPARATUS FOR FORMING AN INTERIORLY BEADED OR LOOPED TEARING STRIP CAN

Filed Feb. 19, 1926 3 Sheets-Sheet 1

Fig. 1

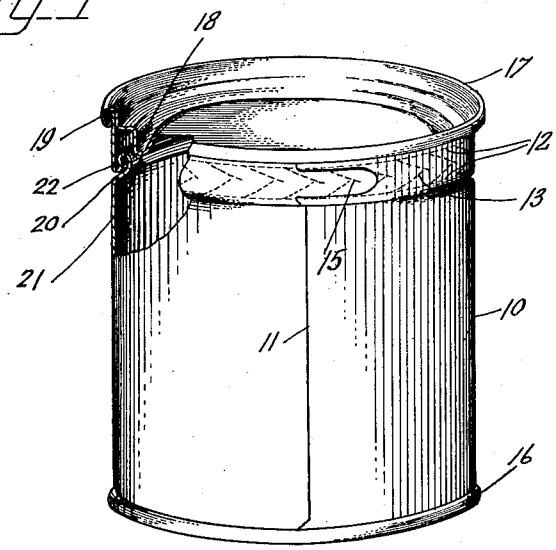

Fig. 2

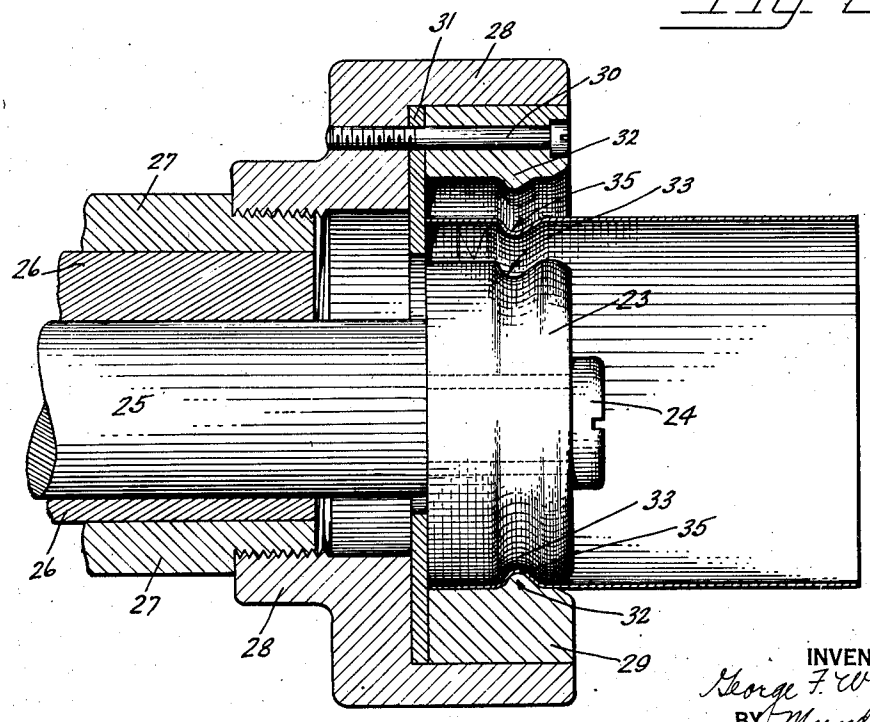

INVENTOR
George F. Walter
BY Munday Clarke
+ Carpenter.
ATTORNEY

June 18, 1929. G. F. WALTER 1,717,590

METHOD AND APPARATUS FOR FORMING AN INTERIORLY BEADED OR LOOPED TEARING STRIP CAN

Filed Feb. 19, 1926 3 Sheets-Sheet 2

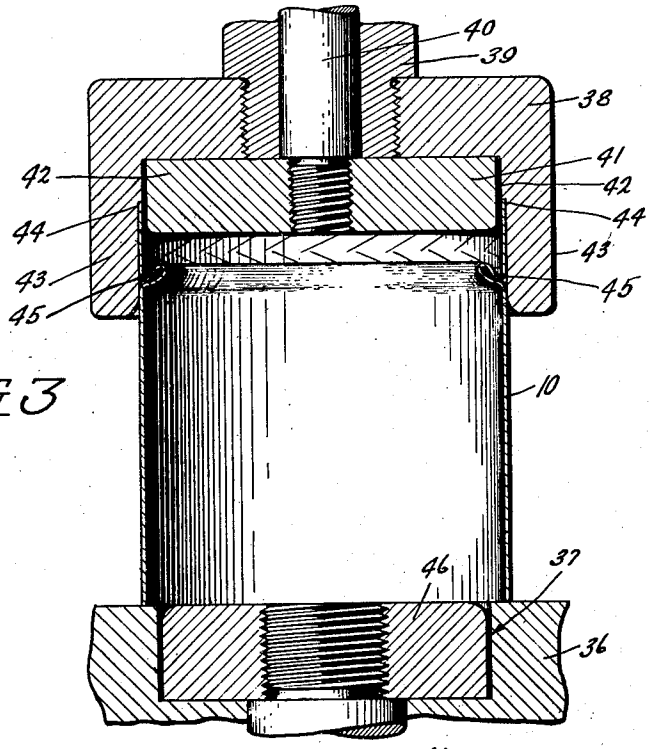

Fig. 3

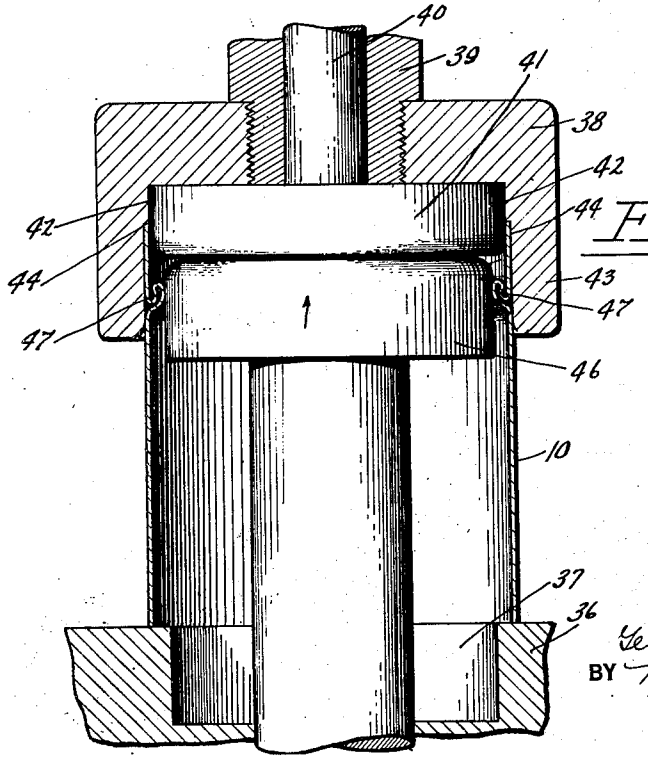

Fig. 4

INVENTOR
George F. Walter
BY Munday, Clarke & Carpenter
ATTORNEY

June 18, 1929. G. F. WALTER 1,717,590

METHOD AND APPARATUS FOR FORMING AN INTERIORLY BEADED OR LOOPED TEARING STRIP CAN

Filed Feb. 19, 1926 3 Sheets-Sheet 3

Fig. 5

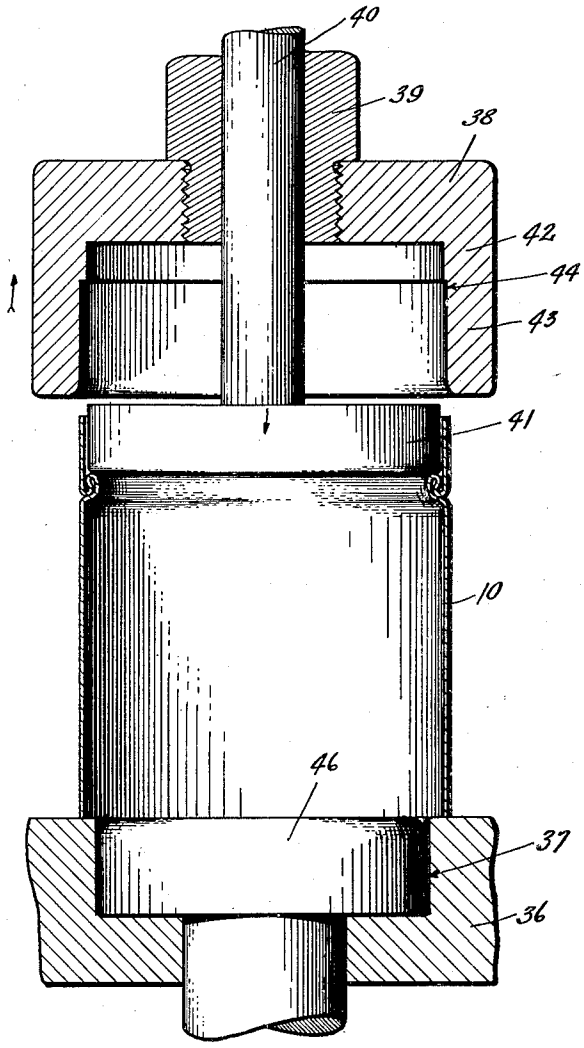

INVENTOR
George F. Walter
BY Munday, Clarke & Carpenter
ATTORNEY

Patented June 18, 1929. 1,717,590

UNITED STATES PATENT OFFICE.

GEORGE FREDRICK WALTER, OF BROOKLYN, NEW YORK, ASSIGNOR TO AMERICAN CAN COMPANY, OF NEW YORK, N. Y., A CORPORATION OF NEW JERSEY.

METHOD AND APPARATUS FOR FORMING AN INTERIORLY-BEADED OR LOOPED TEARING-STRIP CAN.

Application filed February 19, 1926. Serial No. 89,485.

My invention relates in general to a method and apparatus for forming an interiorly beaded or looped tearing strip can with a friction plug reclosure of the type and construction described, illustrated and claimed by John M. Young in his Patent 1,586,277, granted May 25, 1926. In this Young type of tearing strip container with friction plug reclosure a portion of the container wall, a short distance from the top edge, is looped inwardly and upwardly to provide, after said loop or bead has been properly finished and sized, an interior friction wall seat to be engaged by a corresponding interior friction bead or plug formed on the inside of the container cover. Cans of this type have sanitary can ends double seamed to their top and bottom flanges. They also have parallel encircling score lines, with auxiliary score lines between the parallel ones, setting off a tearing strip which terminates into a key engaging tongue. This tearing strip is located between the top double seam and the body bead or loop. When the tearing strip has been removed by means of an opening key the severed container cover with the friction plug element is free to form a reclosure for the container by means of the frictional engagement between the interior can body bead or loop and the inwardly extending friction plug portion of the severed can cover.

A specific object of my invention is the provision of a novel method and apparatus for forming said interior body bead or loop, finishing it to desired shape and for bringing the formed bead or loop to true size or accurate diameter corresponding to the diameter of the friction plug.

The initial beading operation of the can body being the same as already described and illustrated in detail in my co-pending applications Serial Number 89,277 and Serial Number 95,272, emphasis in the present application will be laid upon the novel method and apparatus of collapsing and sizing the body bead or loop. It is most important in the manufacture of this type of container that the inner diameter of the inwardly bent looped portion which is later to form the friction wall seat be properly sized to correctly and tightly and uniformly engage the cover friction plug member when the latter is used as a reclosure after severance from the container by the removal of the tearing strip. This essential truing and sizing condition is easily accomplished by my method and by the mechanism which I have illustrated in the drawings. It should be understood that this mechanism represents only one form of my invention and I do not wish to limit myself to the preferred embodiment shown herein.

One of the objects of my invention resides in providing a very simple and inexpensive method for manufacturing the type of container referred to in a manner adapted to commercial high speed production, consisting of the least number of operations compatible with practical and efficient manufacturing principles.

Another object of my invention resides in providing a very simple method and apparatus of collapsing the preformed peripheral bead of the cylindrical body and thereafter sizing the collapsed bead to true and predetermined circular form.

Still another object of my invention resides in providing a combined device for collapsing the bead, for properly sizing it, and for then ejecting the finished cylinder from the apparatus.

Numerous other objects and advantages of the invention will be apparent as it is better understood from the following description, which, taken in connection with the accompanying drawings, discloses a preferred embodiment thereof.

Referring now to the accompanying drawings which form a part of the specifications,

Fig. 1 is a perspective view, with parts broken away, of the type of container adapted to be formed according to my invention.

Fig. 2 is a longitudinal section through a portion of a beading device, this view illustrating a positioned container body being operated upon by the beading members.

Fig. 3 is a partial longitudinal elevation and cross section through a collapsing mechanism, the view illustrating the second or collapsing operation.

Fig. 4 is a view similar to Fig. 3 illustrating the completion of the collapsing of the bead or loop by a lower chuck member and the sizing or truing of the bead diameter by the same member.

Fig. 5 is a partial, longitudinal elevation and cross section, illustrating the lower chuck member in withdrawn position and the upper collapsing member performing the function of an ejecting mechanism for the can body after the final sizing operation.

Referring more in detail to the drawings and particularly to Fig. 1, the numeral 10 indicates a hollow container body of a cylindrical or other form, provided with the ordinary side seam 11, and circumferentially scored lines 12 setting off a tearing strip 13, and further provided with directing score lines located between and arranged at an angle to the score lines 12. The said tearing strip 13 terminates in the tongue 15 extended beyond the said side seam 11. The container is provided with a bottom member 16 and a cover member 17 double seamed to the container wall. The said cover member 17 is provided with a counter-sink 18, inwardly spaced from the interior wall of the container 10 when the cover member 17 is secured to the seam by the regular double seam 19. The container wall 10 is inwardly presed at 20 to form an upwardly and inwardly extending loop 21, connecting with a downwardly and outwardly extending loop 22, formed in the container wall adjacent and beneath the tearing strip 13. The inner diameter of the looped portion 21 is correctly sized to securely engage the outer diameter of the counter-sink 18 after the tearing strip is removed and when the cover member 17 is used as a reclosure for the opened container 10.

In forming the particular elements described in this container and shown in Fig. 1, it is necessary to first form the container body 10 in the regular manner by properly shaping it to cylindrical or other form and engaging the edges of the blank in the regular side seam 11. This cylindrical or other formed body 10 is then pressed in a beading machine where the first operation of forming the looped construction is accomplished. The forming of the first operation or bead on the container part is clearly illustrated in Fig. 2.

The beading mechanism consists of an inner beading roller 23 rotatably mounted on a stud 24 eccentrically secured to the end of a shaft 25, eccentrically journalled in a sleeve 26 rotatable within a shell 27. A hollow cup member 28 is threaded fixedly to the shell 27 and extends beyond the end of the same as clearly illustrated in Fig. 2. In the annular opening formed in the outer part of the shell there is disposed a ring 29 secured to the cup member 28 by means of screws 30, passing through a hardened steel washer 31 overlying the end of the sleeve 26 and spaced therefrom. The ring 29 is formed with an inwardly extended annular ridge 32 adapted to cooperate at certain periods with an annular groove 33 formed in the roller 23, as clearly illustrated in Fig. 2.

The formed cylindrical container body 10 is inserted within the beading device by being positioned with its inner end against the washer 31, it being understood that the sleeve 26 and the shaft 25 are moved relative to one another, in order, by reason of the eccentricity of each of those members, to position the roller 23 centrally of the ring 29 and away from the inner wall of the ring 29. After the container body 10 has thus been positioned the shaft 25 and the sleeve 26 are both slightly rotated to force the roller 23 toward the inner wall of the ring 29, as illustrated in Fig. 2. In this position the roller 23 engages the inner diameter of the container body 10 and the groove 33 of the said roller forces the material of the container wall against the annular ridge 32 of the ring 29 and causes that part of the container wall to conform to the shape of the ridge 32 and the groove 33. While the sleeve 26 and the shaft 25 is then held in fixed position the shell 27 carrying the cup member 28 and the ring 29 is then rotated, which action causes the ridge 32 to contact the entire circumference of the container body 10 in a circular path of travel, and this action by reason of the cooperation of the roller 23 which works upon the stud 24 forms an inwardly pressed bead 35 into the upper wall of the container body 10 adjacent the tearing strip 13.

After the groove 35 has been formed entirely around the container body 10 the sleeve 26 and the shaft 25 are moved to cause the roller 23 to move inwardly from its position adjacent the ring 29 and thus to free the said container body 10. The formed and now beaded container body is then removed from the beading machine.

After this first or simple beading operation the formed and partially beaded container body 10 is then transferred to a collapsing and sizing or truing mechanism, illustrated in Figs. 3, 4 and 5. Referring now to Fig. 3, where the second or collapsing operation is shown, the can body is positioned upon a die bed plate 36 concentric with a lower chuck holding recess 37 of smaller diameter than the can body and the collapsing device is lowered over the top of the said body. This collapsing device consists of a hollow shell or collapsing die 38 threadedly fixed to a hollow shaft member 39 in which there is movably mounted a plunger shaft 40 to which is threadedly fixed the upper plunger 41. The collapsing die member 38 has two circular recesses of different diameters, the upper and smaller diameter recess 42 forming a snug fitting upper die receiving housing while the lower and wider diameter recess 43 forms a can body receiving holder. The dividing line between the two recesses

42 and 43 is formed by a shoulder 44 against which the upper edge of the can body wall abuts and whereby said can body edge is topped. When the container body 10 is positioned as illustrated in Fig. 3, the hollow shaft 39 carrying the collapsing die 38 is moved downwardly toward the die bed plate 36 and this action collapses the bead 35 shown in Fig. 2 to the looped form 45 shown in Fig. 3, that is to say, the pressure exerted upon the upper edge of the can body 10 by the shoulder part 44 of the collapsing die 38 presses that can body wall portion which lies between the shoulder 44 and the bead 35, downward until the bead assumes the looped form 45 shown in Fig. 3. While the bead 35 is thus collapsed the plunger 41, whose outer diameter is of just sufficient size to snugly fit within the upper part of the can body, acts as an inner pad or supporting mandrel and helps to keep the upper part of the can body, which has to stand the brunt of the pressure of the collapsing die, from being bent out of perfectly straight shape.

Turning our attention now to Fig. 4, it will be noticed that a lower sizing plunger or chuck member 46 is then raised out of its housing recess 37 by any suitable power mechanism not shown and enters the can body from the bottom and by a wedging action squeezes the substantially horizontally pointing loop 45 upwardly to a substantial vertical position 47, at the same time truing the inner diameter of the loop 47 to accurate diameter size corresponding exactly with the uniform outer diameter of the friction plug member 18 of the can cover. The sizing chuck 46 is raised until its upper face meets the lower face of the upper plunger. When the can body bead has thus been finally formed and sized by the lower chuck member 46 the can body is ready to be discharged from the collapsing and sizing mechanism. In order to effectively and positively eject said can body the upper plunger 41 is lowered, while the lower chuck 46 is also withdrawn to its housing recess 37, until it comes to rest upon the rounded top edge of the finished bead 47. Simultaneously the collapsing die shell 38 is withdrawn upwardly by means of the hollow shaft and suitable power connections, not shown, and thus the finished fully beaded can body is stripped from the collapsing and sizing mechanisms which have thus far tightly engaged the same. This stripping or ejecting operation is clearly illustrated in Fig. 5 where the upper plunger is shown extended downwardly to its utmost capacity and where the collapsing die is shown completely freed from the can body wall and the lower chuck 46 is shown returned to its housing recess 37. The lower chuck or sizing member 46 has its upper part gently rounded or tapered which assures a gradual steady wedging entrance into the bead and a final accurate sizing of the same.

It is thought that the invention and many of its attendant advantages will be understood from the foregoing description, and it will be apparent that various changes may be made in the form, construction and arrangement of the parts without departing from the spirit and scope of the invention, or sacrificing all of its material advantages, the form hereinbefore described being merely a preferred embodiment thereof.

I claim:

1. The method of forming a peripheral looped wall portion in a cylindrical body which comprises forming a peripheral bead in the wall of the cylindrical body, subjecting the wall to endwise pressure applied on the end edges of the wall to collapse the bead, and bending the bead in a radial direction throughout its entire circumference a predetermined amount to provide a peripheral looped wall portion of exact dimensions.

2. The method of forming a peripheral looped wall portion in a cylindrical body which comprises forming a peripheral inwardly extending bead in the cylinder wall, subjecting the wall to endwise pressure to collapse the bead, then forcing the bead laterally a uniform amount throughout its circumference to form a peripheral looped wall portion of exact dimensions.

3. The method of forming a peripheral looped wall portion in a cylindrical body which comprises collapsing the peripheral bead formed in the wall of a cylindrical body and thereafter squeezing the collapsed bead by contact with concentric walls of a die of a fixed circumference to size said bead.

4. The method of forming a peripheral looped wall portion in a cylindrical body which comprises forming a peripheral inwardly projecting bead, subjecting the wall to endwise pressure to collapse the bead, and passing a circular die of fixed circumference concentrically through said bead to size it.

5. In a device of the character described, the combination of means for forming a peripheral bead in the wall of the cylindrical body, means for subjecting said body to endwise pressure to collapse the bead, and means for causing a circular die surface of fixed circumferential dimensions to move relatively to said bead and to force said collapsed bead laterally to size it.

6. In a device of the character described, the combination of means for forming a peripheral bead in a cylindrical wall, means for subjecting said wall to endwise pressure to collapse said bead, a circular die of fixed circumference, and means for forcing said circular die concentrically through said bead to force the bead laterally to size it.

7. In a device of the character described, the combination of means for collapsing and sizing devices for the peripheral bead formed in a cylindrical wall comprising a die bed plate adapted to support one end of the cylindrical body, a collapsing head movable relatively thereto, said head having a circular recess formed with a seat for the opposite end of the cylindrical body, means to move said head and die bed plate relatively to collapse said bead, and a sizing chuck carried by said plate and shiftable through said collapsed bead to size said bead.

8. In a device of the character described, the combination of a die bed plate adapted to support one end of a cylinder having a peripherally inwardly extending bead, a sizing chuck carried by said bead, a collapsing die mounted opposite said plate comprising a ring having an annular inner shoulder adapted to receive the other end of the cylinder, said ring being sufficiently deep to enclose the wall portion, provided with the bead, an ejector mounted within said collapsing die, and means for shifting said sizing chuck and ejector to cause said chuck to pass through said bead and size it and to cause said ejector to contact said sized bead and eject the cylinder from said collapsing bead.

9. In a device of the character described, the combination of a die plate having a recess, a sizing chuck normally seated in said recess, a shaft connected to said chuck and movable through said plate to shift said chuck toward and from said plate, a collapsing die comprising a shell having a relatively deep circular recess facing said plate and provided with an annular shoulder thereon to receive a can end, means for shifting said shell toward and from said die plate, an ejector mounted on said shell and means for shifting said ejector toward and from said die plate.

GEORGE FREDRICK WALTER.