US00D741960S

# (12) United States Design Patent

Campanaro et al.

(10) Patent No.: US D741,960 S
(45) Date of Patent: ** Oct. 27, 2015

(54) **JUMPING EXERCISE DEVICE**

(71) Applicant: **Total Gym Global Corp.**, San Diego, CA (US)

(72) Inventors: **Thomas J. Campanaro**, Rancho Santa Fe, CA (US); **Jesse Thomas Campanaro**, San Diego, CA (US); **Dan McCutcheon**, San Diego, CA (US)

(73) Assignee: **Total Gym Global Corp.**, San Diego, CA (US)

(**) Term: **14 Years**

(21) Appl. No.: **29/506,824**

(22) Filed: **Oct. 21, 2014**

(51) **LOC (10) Cl.** ..... **21-02**

(52) **U.S. Cl.**
USPC ..... **D21/676**

(58) **Field of Classification Search**
USPC ..... D6/552; D21/686, 676, 687, 662, 674, D21/666, 673, 690, 679, 694, 691, 675, D21/688; 211/85.7; 206/579; 135/122; 52/83, 27; 482/145, 23, 2, 72, 57, 62, 482/60, 142, 104, 131, 96, 132, 135, 140, 482/121, 130, 95, 92, 73, 144, 143, 907, 482/128, 108, 908, 94, 106, 97, 123, 126, 482/38, 41, 133, 137, 35, 101, 147, 115, 482/138, 91, 70, 110, 52, 71, 8; 136/251; 290/55; 114/264, 382; 472/128; 606/241, 244; 108/4; 5/607, 624; 601/24, 242, 23; 248/300; 29/428
CPC ..... A63B 21/0552; A63B 21/1492; A63B 22/001; A63B 23/0211; A63B 2208/0204; A63B 21/154
See application file for complete search history.

(56) **References Cited**

U.S. PATENT DOCUMENTS

| | | | | | |
|---|---|---|---|---|---|
| D251,079 | S | * | 2/1979 | Shugarman | D21/676 |
| D284,597 | S | * | 7/1986 | Smith et al. | D21/676 |
| D362,700 | S | * | 9/1995 | Breibart et al. | D21/673 |
| D382,319 | S | * | 8/1997 | Gerschefske et al. | D21/674 |
| D405,132 | S | * | 2/1999 | Westfall et al. | D21/676 |
| 6,120,425 | A | * | 9/2000 | Endelman | 482/142 |
| D431,615 | S | * | 10/2000 | Webber et al. | D21/675 |
| D438,918 | S | * | 3/2001 | Batca et al. | D21/676 |
| 6,371,895 | B1 | * | 4/2002 | Endelman et al. | 482/135 |
| D481,428 | S | * | 10/2003 | Giannelli et al. | D21/675 |
| D493,853 | S | * | 8/2004 | Campanaro et al. | D21/676 |
| D556,274 | S | * | 11/2007 | Morgan | D21/662 |
| D608,401 | S | * | 1/2010 | Campanaro et al. | D21/687 |
| D612,000 | S | * | 3/2010 | Campanaro et al. | D21/687 |

(Continued)

*Primary Examiner* — Robert M Spear
*Assistant Examiner* — Ryan Harvey
(74) *Attorney, Agent, or Firm* — Stephen C. Beuerle; Procopio Cory Hargreaves & Savitch LLP

(57) **CLAIM**

The ornamental design for a jumping exercise device, as shown and described.

**DESCRIPTION**

FIG. **1** is a perspective view of the jumping exercise device;
FIG. **2** is a front elevation view of the jumping exercise device;
FIG. **3** is a rear elevation view of the jumping exercise device;
FIG. **4** is a left side elevational view of the jumping exercise device;
FIG. **5** is a right side elevational view of the jumping exercise device;
FIG. **6** is a top plan view of the jumping exercise device; and,
FIG. **7** is a bottom plan view of the exercise device.

**1 Claim, 7 Drawing Sheets**

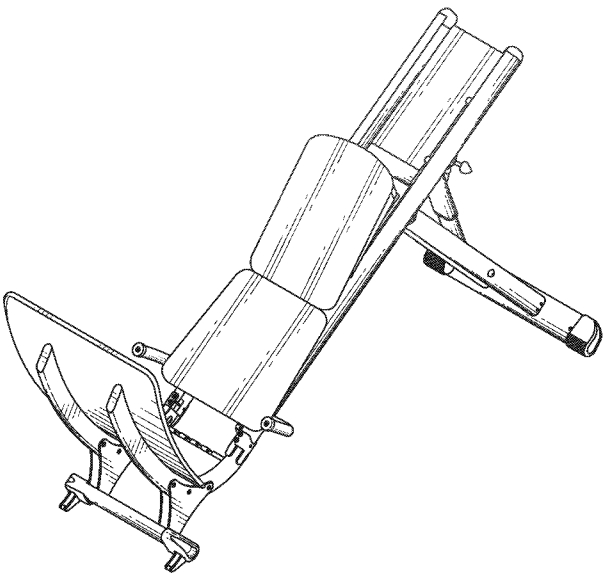

(56) **References Cited**

U.S. PATENT DOCUMENTS

| | | | | |
|---|---|---|---|---|
| D635,205 | S * | 3/2011 | Thulin | D21/676 |
| 8,033,971 | B2 * | 10/2011 | Campanaro et al. | 482/142 |
| 8,075,457 | B2 * | 12/2011 | Campanaro et al. | 482/96 |
| D659,205 | S * | 5/2012 | Endelman et al. | D21/686 |
| 8,323,157 | B2 * | 12/2012 | Campanaro et al. | 482/96 |
| D694,347 | S * | 11/2013 | Campanaro et al. | D21/676 |
| D703,279 | S * | 4/2014 | Ho | D21/673 |
| 8,702,575 | B2 * | 4/2014 | McVay et al. | 482/142 |
| D726,263 | S * | 4/2015 | Anderson | D21/676 |
| 2001/0056011 | A1 * | 12/2001 | Endelman et al. | 482/121 |
| 2006/0019806 | A1 * | 1/2006 | Mikulski | 482/121 |
| 2009/0163323 | A1 * | 6/2009 | Bocchicchio | 482/8 |
| 2010/0227748 | A1 * | 9/2010 | Campanaro et al. | 482/140 |
| 2012/0053028 | A1 * | 3/2012 | Campanaro et al. | 482/131 |
| 2014/0141948 | A1 * | 5/2014 | Aronson et al. | 482/128 |
| 2014/0194260 | A1 * | 7/2014 | Campanaro et al. | 482/131 |

* cited by examiner

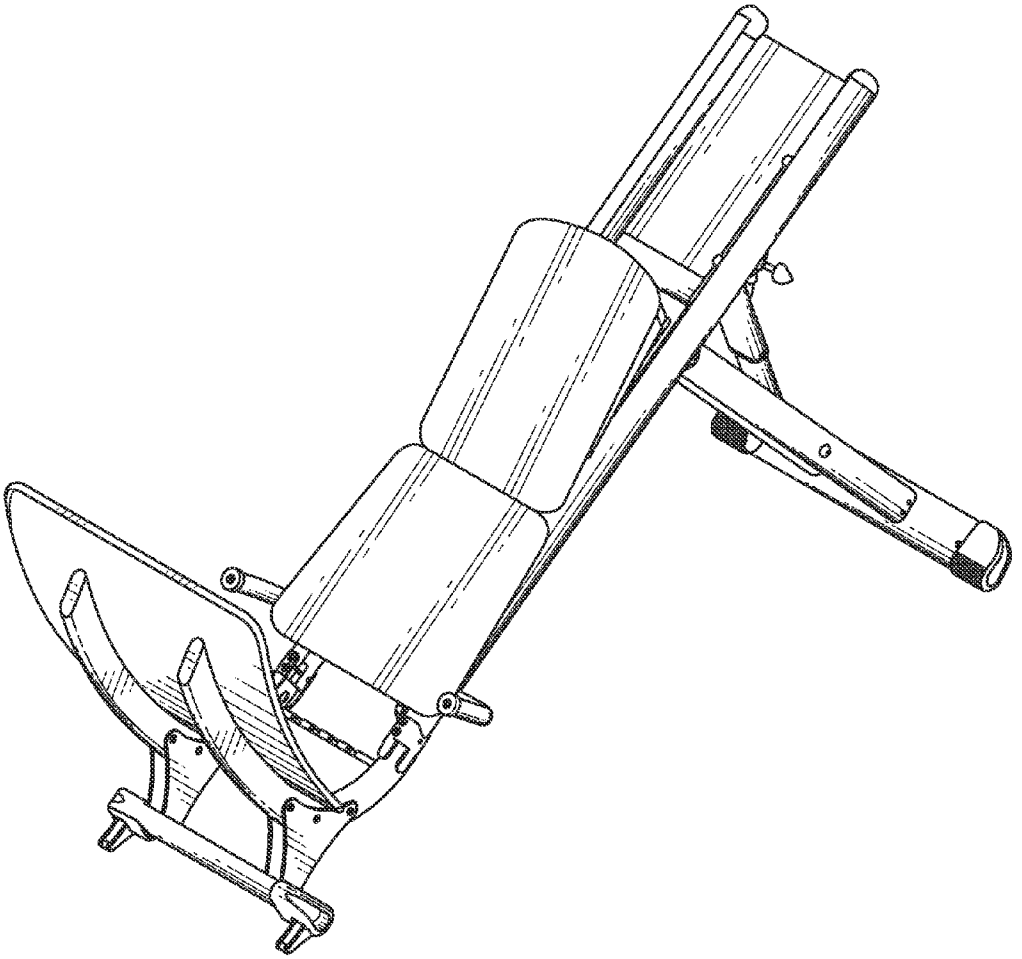

FIG. 1

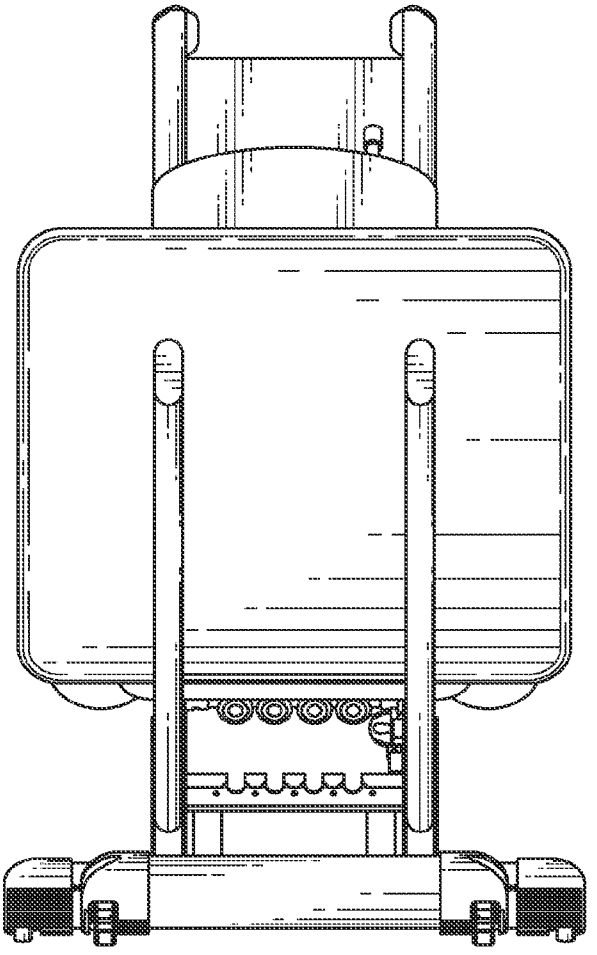

FIG. 2

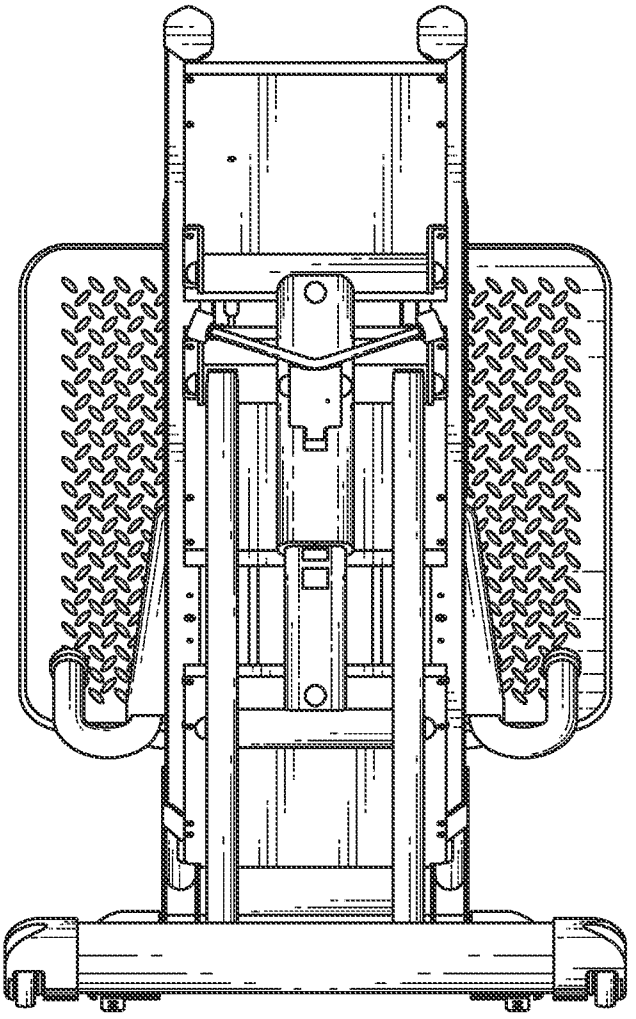

FIG. 3

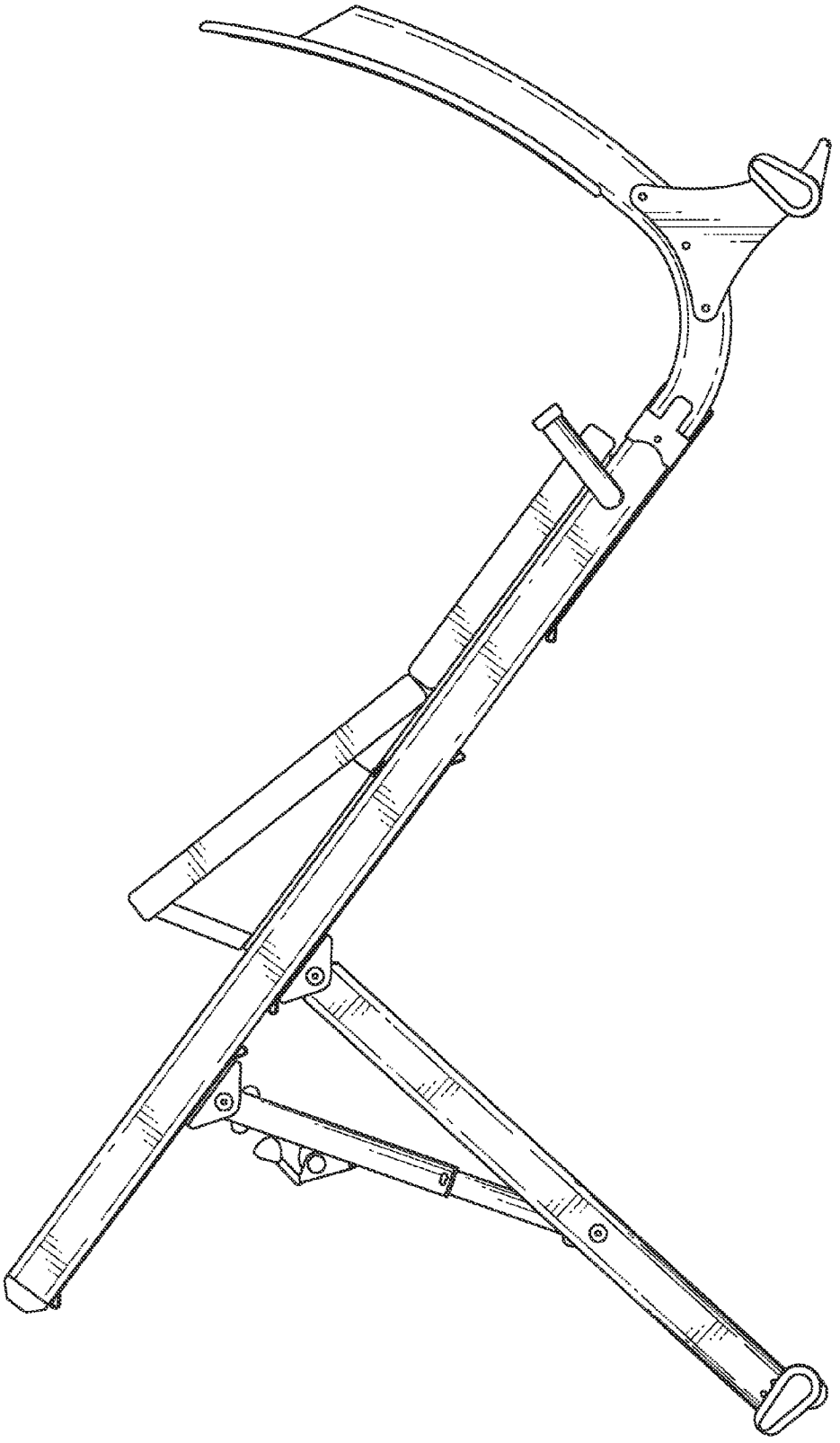

FIG. 4

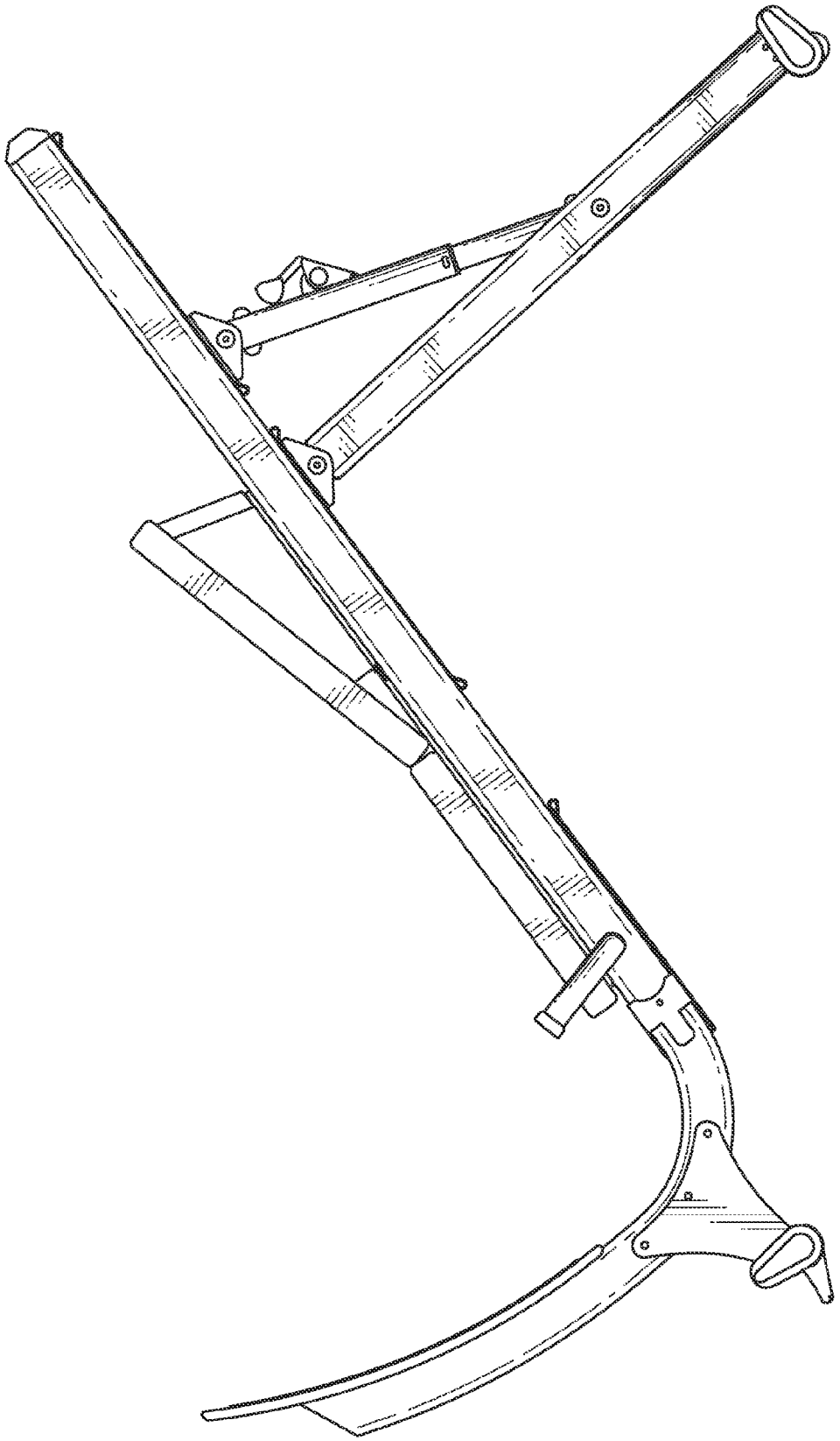

FIG. 5

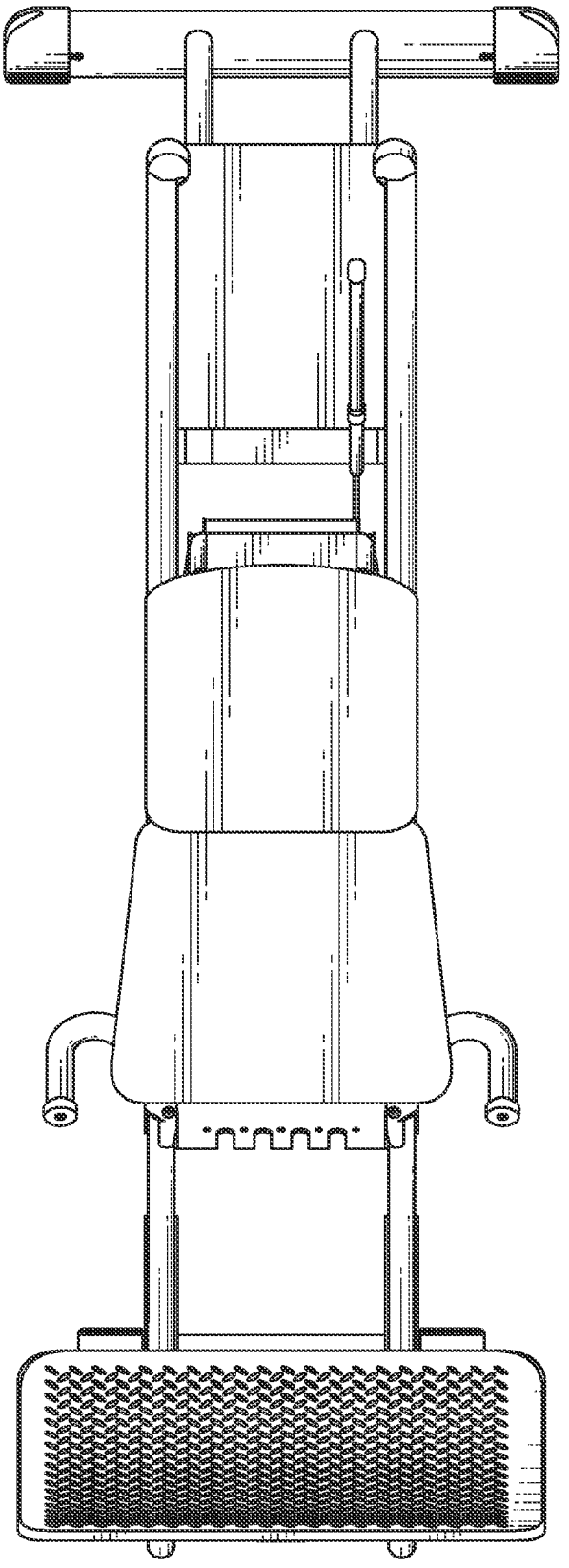

FIG. 6

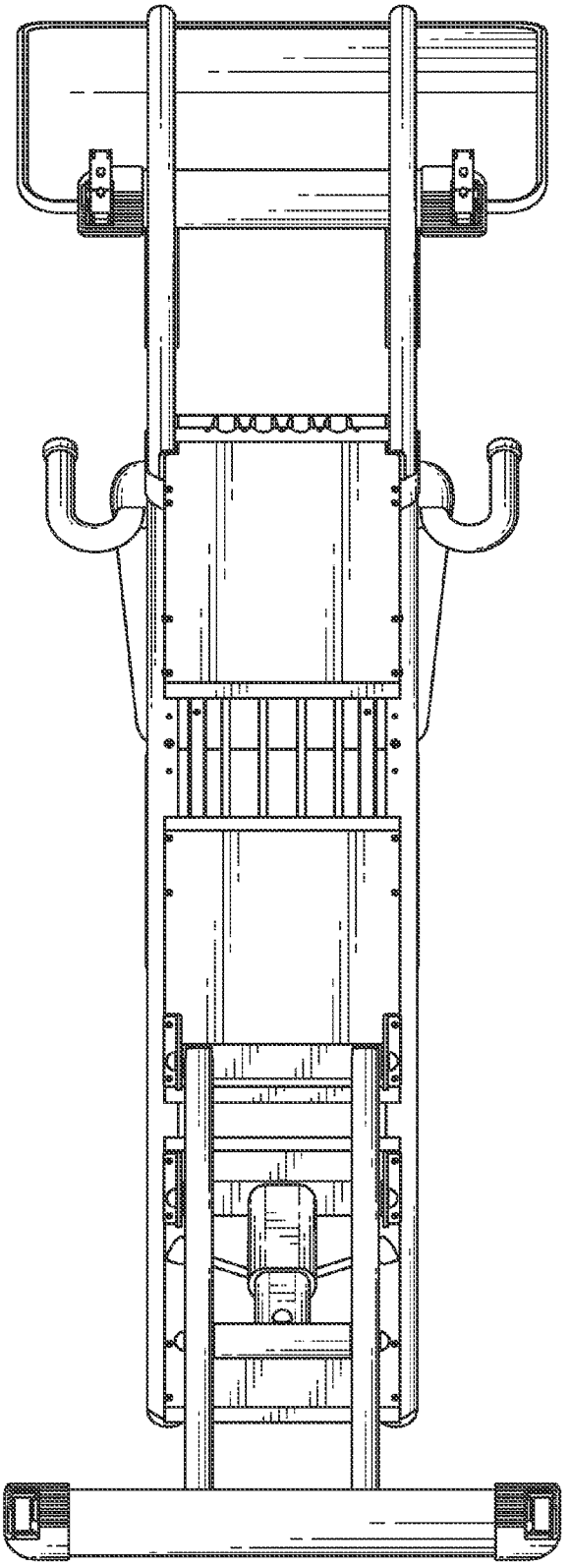

FIG. 7