June 26, 1956 R. BEAUFOY 2,752,511

ELECTRICAL TIMING CIRCUITS

Filed July 7, 1951

FIG. 1.

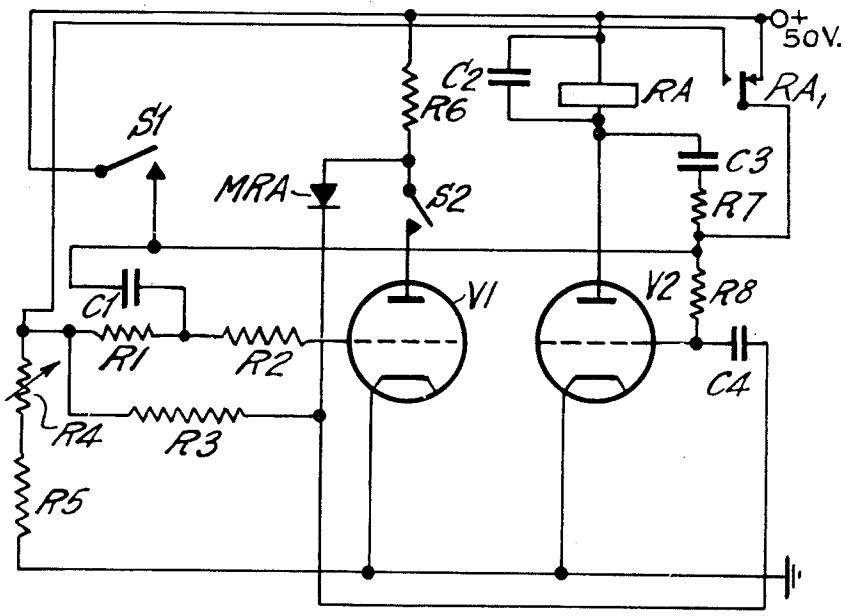

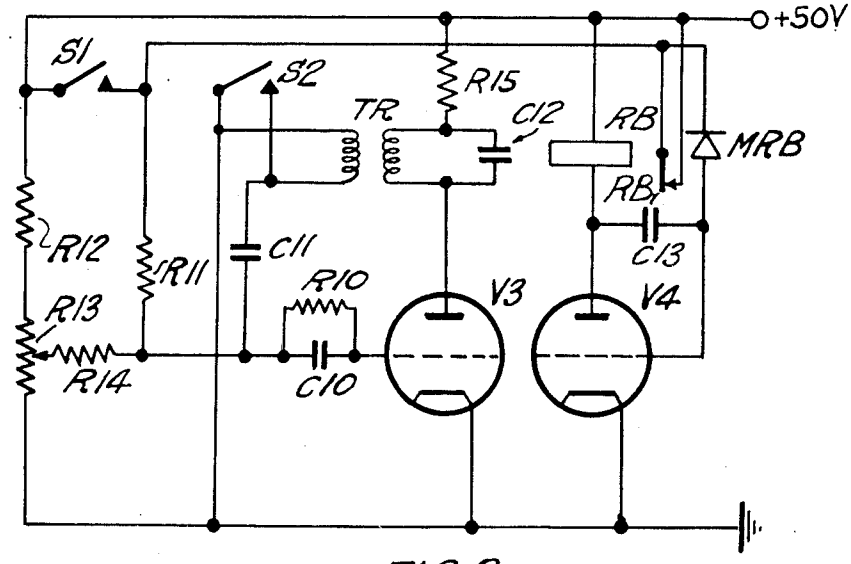

FIG. 2.

INVENTOR

Raymond Beaufoy

BY

Blaine Stinchert

ATTORNEY

United States Patent Office 2,752,511 Patented June 26, 1956

2,752,511

ELECTRICAL TIMING CIRCUITS

Raymond Beaufoy, Taplow, England, assignor to British Telecommunications Research Limited, Taplow, England, a British company

Application July 7, 1951, Serial No. 235,625

Claims priority, application Great Britain July 31, 1950

14 Claims. (Cl. 307—132)

The present invention relates to electrical timing circuits and is particularly concerned with improved arrangements for producing an operation at the end of a timed period which period is preferably capable of variation. In a convenient form the operation concerned comprises the release of an electric relay at a desired time after the performance of a switching operation. Preferably the timed period may be adjusted by a manually-operated control associated with the timer and the timer is also susceptible to external control which may take two forms. One of these controls serves to inhibit the timing operation so that the period from which timing commences may be determined by the removal of this control, while the second produces a re-setting action which may be either partial or complete, that is to say when the second control becomes operative the operation which has taken place is wiped out to a greater or less extent and as soon as the control is removed timing commences from the point to which the circuit has been set back.

A timing device having these characteristics may be useful for a number of purposes but it finds particular application to the control of traffic signals. In this case the first control mentioned above may be effective as long as a traffic lane is denied right of way so that timing only commences when right of way is granted, while the second control may be effective due to the passage of vehicles over a detector in a traffic lane possessing right of way whereby the timer is reset so that the right of way period is extended by further traffic arriving.

The timer according to the invention also possesses the advantages that it is small in size, involving only two thermionic valves, which may be located in the same envelope, and it is constant in its timing regardless of external conditions such as temperature, variation of supply voltage and the adjustment of the relay.

According to the invention in an electrical timing circuit for timing a desired period from the operation of electrical contacts by external control, a relay arranged to effect a switching operation at the end of the timed period is connected in the anode circuit of a thermionic valve the potential on the control grid of which is adapted to be varied under the control of a second thermionic valve on which the external control contacts operate and the operation of which is also controlled by contacts of the relay. The relay will of course have additional contacts controlling the operation for which the timing is required.

In one form of the invention the two valves may be interconnected so as to form a multi-vibrator of substantially known type when the external controls are not operative. The timing is controlled by means of a capacitor the state of charge of which is varied by the different controls. In a second form of the invention the valve which is not directly associated with the relay is arranged to operate as an oscillator valve the output from which when applied to the grid of the other valve serves to render it negative so that the valve no longer conducts and the relay in its anode circuit is therefore released.

Two embodiments of the invention will now be described by way of example with reference to the accompanying drawing comprising Figs. 1 and 2.

Referring first to the arrangement of Fig. 1, it will be assumed that external control contacts S1 are open while contacts S2 are closed. It will also be assumed that the relay RA has just been released as a result of the preceding cycle of operation, this resulting from the fact that the valve V2 becomes non-conductive when its grid is driven negative. With the equipment in the condition assumed, i. e. as shown except that contacts S2 are closed, capacitor C1 will be charged from the 50-volt supply and positive potential is also extended over resistor R8, which is of high value, to the grid of valve V2 so that after a short time valve V2 again conducts and relay RA is operated. Thereupon at its contacts RA1 it disconnects positive from capacitor C1 and this capacitor is connected instead to the trimmer resistor R4 and is also shunted by resistor R1. As a result the grid of valve V1 is now rendered negative with respect to its cathode by an amount represented by 50-volts less the trimmer volts. In consequence of the discharge of capacitor C1 however, this negative voltage is gradually reduced and eventually valve V1 starts to conduct. Due to the flow of current through resistor R6, the potential of the anode of valve V1 is reduced and accordingly the potential of the grid of V2 is correspondingly reduced in view of the circuit by way of rectifier MRA and capacitor C4. The anode of V2 is coupled to the grid of V1 by way of capacitor C3, resistor R7, capacitor C1 and resistor R2. Consequently a trigger action takes place which serves to cut off V2 and repeat the cycle. Accordingly, if S1 remains open and S2 closed, the circuit will continue to operate in a manner similar to a multi-vibrator with a main period, i. e. the time during which V1 is cut-off, determined by the values of R1 and C1. The period during which V2 is cut off need only be sufficiently long to ensure the proper performance of the switching operations effected by relay RA.

If however contacts S1 are closed, capacitor C1 remains connected to the 50-volt supply after the relay is operated. This continuous application of 50-volts by way of resistor R8 to the grid of V2 serves to balance out the drop in voltage by way of resistor R6 and rectifier MRA and accordingly the potential of the grid of V2 remains substantially constant and the relay is therefore held operated. In other words, the timer has been reset and when contacts S1 are again opened, will start to time its full period.

If contacts S2 remain open, it is impossible for valve V1 to conduct since its anode is disconnected and consequently no change in the potential of the grid of V2 occurs and the timer remains inoperative.

It is found that if a plurality of timers are operated from the same supply there is a tendency for the impedance of the source to introduce enough coupling to cause the required periods to be subject to some variation. If however it is arranged that the valve corresponding to V1 is required to oscillate to perform its desired function, this stage of oscillation is virtually unaffected by variations of the common supply voltage and consequently the timing remains constant. Fig. 2 indicates an arrangement incorporating this modification, the general principles of operation remaining unchanged.

Referring now to the working of the Fig. 2 arrangement, in this case also it will be assumed that the relay has just been released in consequence of the previous cycle of operations and that the hold contacts S2 are open which in this case is the requirement for timing operations to proceed.

Capacitor C10 is charged by the flow of grid current by way of resistor R12, trimmer R13 and resistor R14, while at the same time 50-volts positive is applied over the normally closed relay contacts RB1 and rectifier MRB in its high resistance direction to the grid of valve V4

which accordingly conducts after a short period. Thereupon relay RB is operated and opens contacts RB1 so that the grid of V3 becomes negative with respect to its cathode by an amount represented by 50-volts less the trimmer volts. Capacitor C10 now starts to discharge through resistor R10 and this proceeds until a point is reached at which the valve starts to conduct. Thereafter oscillations of the valve V3 are able to take place in view of the parallel tuned circuit represented by capacitor C12 and transformer TR in the anode circuit in series with resistor R15. The transformer TR is connected so as to provide a feed to the grid by way of capacitor C11 and the amplitude of oscillation builds up rapidly to a current value which is sufficient when rectified by MRB to drive the grid of V4 negative and thus cause the valve to become non-conducting. Thereupon relay RB releases and the operation is repeated. The trimmer R13 serves to permit fine adjustment of the time interval to compensate for tolerances of capacitor C10 and valve V3. A suitable frequency of oscillation has been found to be 500 cycles per second but this is not critical.

Considering now the operation of the external controls, if the re-setting contacts S1 are closed, 50-volts is applied by way of resistor R11 to re-charge the capacitor C10 so that the conditions for starting oscillations are not established and oscillations cease if they are in progress and hence no negative potential is fed to the grid of V4 and accordingly relay RB remains operated. The inclusion of resistor R11 enables a partial resetting operation to take place if the contacts S1 are only closed for a very short interval.

If contacts S2 are closed, the secondary winding of the transformer TR is short-circuited and accordingly no oscillations can commence even though valve V3 is conducting. As soon as the contacts are opened however, the oscillations build up and relay RB is released if the predetermined timed interval has elapsed.

Various modifications of the arrangement shown in Fig. 2 are possible. For instance, it is virtually immaterial whether the tuned circuit includes the primary or the secondary of the transformer TR. Similarly the contacts S2 may be arranged to short-circuit either winding but it may be more convenient from other points of view to operate on the secondary so that one of the contacts may be earthed. It may also be desirable to shunt the rectifier MRB by a high value resistor to give operation which is more consistent and less dependent on the characteristics of the rectifier.

I claim:

1. A resettable electrical timing circuit for effecting a switching operation at the end of a predetermined period comprising in combination a first thermionic valve, a relay in the anode circuit of said valve, first contacts operated by said relay for controlling an external circuit, second contacts operated by said relay for controlling the timing circuit, a second thermionic valve, means for varying the potential of the grid of said first thermionic valve under the control of said second thermionic valve, external control contacts for resetting said timing circuit by cancelling a partial operation thereof and means for controlling said second thermionic valve jointly by said external contacts and said second relay contacts.

2. A resettable electrical timing circuit for effecting a switching operation at the end of a predetermined period comprising in combination a first thermionic valve, a relay in the anode circuit of said valve, first contact operated by said relay for controlling an external circuit, second contacts operated by said relay for controlling the timing circuit, a second thermionic valve, a capacitor connected to the grid of said second valve, means for charging said capacitor, means controlled by said second contacts of said relay for progressively discharging said capacitor and thereby causing said second valve to conduct, connections between the anode of said second valve and the grid of said first valve whereby when said second valve conducts said first valve is cut off and external control contacts for resetting said timing circuit by cancelling a partial operation thereof.

3. A resettable electrical timing circuit for effecting a switching operation at the end of a predetermined period comprising in combination a first thermionic valve, a relay in the anode circuit of said valve, first contacts operated by said relay for controlling an external circuit, second contacts operated by said relay and comprising a make-break combination for controlling the timing circuit, a second thermionic valve, a capacitor connected to the grid of said second valve, a circuit including the break contacts of said second relay contacts for charging said capacitor, a circuit including the make contacts of said second relay contacts for progressively discharging said capacitor and thereby causing said second valve to conduct, connections between the anode of said second valve and the grid of said first valve whereby when said second valve conducts said first valve is cut off and external control contacts shunting said break contacts of said second relay contacts for resetting said timing circuit by cancelling a partial operation thereof.

4. A resettable electrical timing circuit for effecting a switching operation at the end of a predetermined period comprising in combination a first thermionic valve, a relay in the anode circuit of said valve, first contacts operated by said relay for controlling an external circuit, second contacts operated by said relay for controlling the timing circuit, a second thermionic valve, a capacitor connected to the grid of said second valve, means for charging said capacitor, means controlled by said second relay contacts for progressively discharging said capacitor and thereby causing said second valve to conduct, connections between the anode of said second valve and the grid of said first valve whereby when said second valve conducts said first valve is cut off, first external control contacts cooperating with said second contacts of said relay for resetting said timing circuit by cancelling a partial operation thereof and second external control contacts located in the anode circuit of said second valve for inhibiting the timing operation of said timing circuit.

5. A resettable electrical timing circuit for effecting a switching operation at the end of a predetermined period comprising in combination a first thermionic valve, a relay in the anode circuit of said valve, first contacts operated by said relay for controling an external circuit, second contacts operated by said relay for controlling the timing circuit, a second thermionic valve, a capacitor connected to the grid of said second valve, means for charging said capacitor, means controlled by said second contacts of said relay for progressively discharging said capacitor and thereby causing said second valve to conduct, coupling means between the anode and grid circuits of said second valve whereby when said valve conducts oscillations are set up, a connection between the anode of said second valve and the grid of said first valve whereby when said second valve is set in oscillation said first valve is cut off, and external control contacts for resetting said timing circuit by cancelling a partial operation thereof.

6. An electrical timing circuit as claimed in claim 5, in which the connection between the anode of said second valve and the grid of said first valve includes a rectifier.

7. An electrical timing circuit as claimed in claim 5, said external control contacts serve to apply positive potential to the grid of said second valve and thereby prevent the valve from oscillating.

8. An electrical timing circuit as claimed in claim 5, in which the anode circuit of said second valve includes a parallel tuned circuit comprising a capacitor and a transformer by means of which feed-back is provided to the grid circuit.

9. An electrical timing circuit as claimed in claim 8, in which further external control contacts serve to short-

circuit a winding of the transformer and thereby inhibit the timing operation of the timing circuit.

10. An electrical timing circuit for effecting a switching operation at the end of a predetermined period comprising in combination, a first thermionic valve, a relay in the anode circuit of said valve, first contacts operated by said relay for controlling an external circuit, second contacts operated by said relay for controlling the timing circuit, a second thermionic valve, means for varying the potential of the grid of said first thermionic valve under the control of said second thermionic valve, circuit connections including said second relay contacts for initiating a progressive change in the grid potential of said second valve and means for causing said change to become very rapid after it has proceeded to a predetermined extent thereby securing a rapid change of said second valve to the opposite state and hence a rapid control of said first valve.

11. An electrical timing circuit for effecting a switching operation at the end of a predetermined period comprising in combination, a first thermionic valve, a relay in the anode circuit of said valve, first contacts operated by said relay for controlling an external circuit, second contacts operated by said relay for controlling the timing circuit, a second thermionic valve, means for reducing the potential of the grid of said first thermionic valve under the control of said second thermionic valve, circuit connections including said second relay contacts for initiating a progressive increase in the grid potential of said second valve and means for causing said increase to become very rapid after it has proceeded to a predetermined extent thereby securing a rapid change of said second valve to the conducting state and hence a rapid cut-off of said first valve.

12. An electrical timing circuit for effecting a switching operation at the end of a predetermined period comprising in combination, a first thermionic valve, a relay in the anode circuit of said valve, first contacts operated by said relay for controlling an external circuit, second contacts operated by said relay for controlling the timing circuit, a second thermionic valve, means for reducing the potential of the grid of said first thermionic valve under the control of said second thermionic valve, circuit connections including said second relay contacts for initiating a progressive increase in the grid potential of said second valve and circuit connections between the anode of said first valve and the grid of said second valve such as to cause said increase to become very rapid after

it has proceeded to a predetermined extent thereby securing a rapid change of said second valve to the conducting state and hence a rapid cut-off of said first valve.

13. An electrical timing circuit for effecting a switching operation at the end of a predetermined period comprising in combination, a first thermionic valve, a relay in the anode circuit of said valve, first contacts operated by said relay for controlling an external circuit, second contacts operated by said relay for controlling the timing circuit, a second thermionic valve, circuit connections including said second relay contacts for initiating a progressive increase in the grid potential of said second valve and thereby causing said second valve to conduct, coupling means between the anode and grid circuits of said second valve whereby when said valve starts to conduct oscillations of rapidly increasing amplitude are set up, and circuit connections including a rectifier between the grid of said second valve and the grid of said first valve whereby when said second valve is set in oscillation a negative potential for effecting the cut-off of said first valve is rapidly built up on the grid thereof.

14. An electrical timing circuit for effecting a switching operation at the end of a predetermined period comprising in combination, a first thermionic valve, a relay in the anode circuit of said valve, first contacts operated by said relay for controlling an external circuit, second contacts operated by said relay for controlling the timing circuit, a second thermionic valve, a capacitor connected to the grid of said second valve, means for charging said capacitor, means controlled by said second relay contacts for progressively discharging said capacitor so as to increase the grid potential and thereby cause said second valve to conduct, coupling means between the anode and grid circuits of said second valve whereby when said valve starts to conduct oscillations of rapidly increasing amplitude are set up, and circuit connections including a rectifier between the grid of said second valve and the grid of said first valve whereby when said second valve is set in oscillation a negative potential for effecting the cut-off of said first valve is rapidly built up on the grid thereof.

References Cited in the file of this patent

UNITED STATES PATENTS

2,458,283	McCreary	Jan. 4, 1949
2,583,792	Nelson	Jan. 29, 1952
2,591,810	Hart	Apr. 8, 1952