Feb. 14, 1950 M. SORKIN 2,497,744

TOY FLATIRON

Filed Dec. 27, 1945

Fig. 1

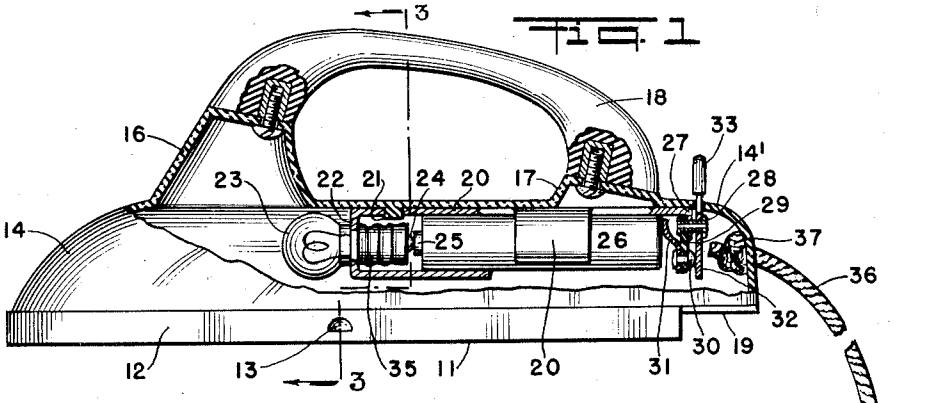

Fig. 2

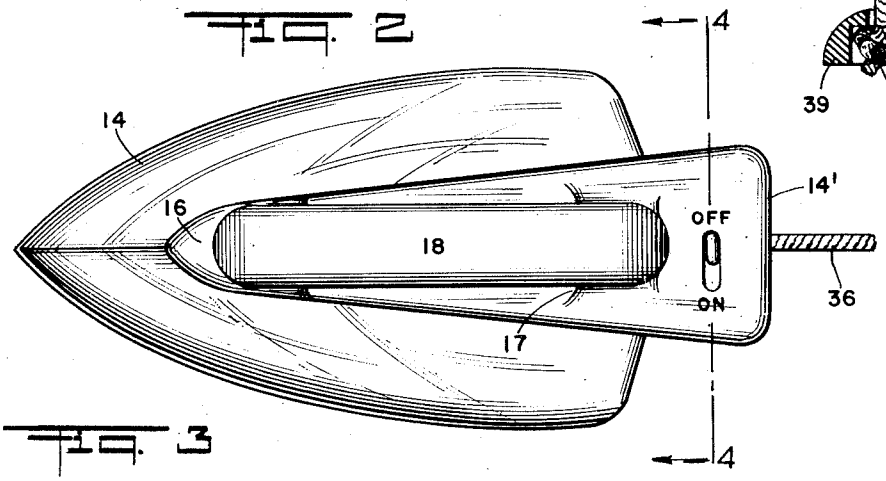

Fig. 3

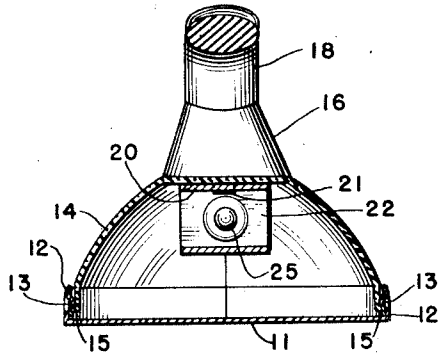

Fig. 4

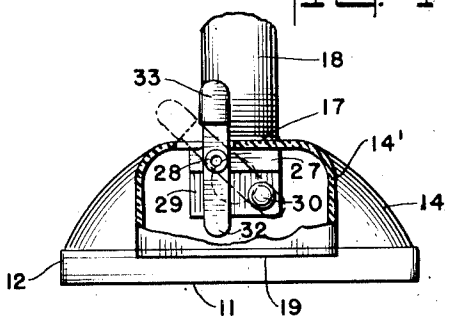

Fig. 5

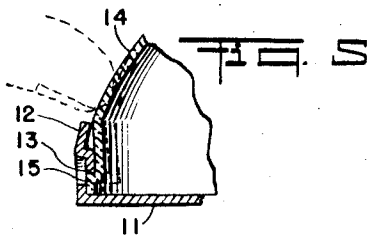

INVENTOR.

MORRIS SORKIN,

Irving Seidman

ATTORNEY

Patented Feb. 14, 1950 2,497,744

UNITED STATES PATENT OFFICE

2,497,744

TOY FLATIRON

Morris Sorkin, New York, N. Y., assignor to Scientific Development Corp., a corporation of New York

Application December 27, 1945, Serial No. 637,299

1 Claim. (Cl. 46—14)

1

This invention relates to toys, and has particular reference to a toy constructed to simulate a household flatiron such as is commonly used for pressing clothes and the like.

An object of my invention is to provide a toy of the character described in which I include means to give the illusion of heat.

A further object of my invention is the provision therein of a manually operated switch upon the said toy flatiron to simulate the operation, in part, of an actual flatiron.

Another object of my invention is the inclusion therein of a cord and button to simulate the regulation cord or wire conductor and plug used on an actual flatiron.

A still further object of this invention is the provision of an organization in which the constituent elements are so arranged structurally and functionally as to assure improved results with materials which may be manufactured at reasonable cost, may be easily assembled and which will be efficient in operation with minimum wear to the parts.

The invention possesses other objects and features of advantage, some of which, with the foregoing will be set forth in the following description and in the claim wherein parts will be identified by specific names for convenience, but they are intended to be as generic in their application to similar parts as the art will permit. In the accompanying drawings there has been illustrated the best embodiment of the invention known to me, but such embodiment is to be regarded as typical only of many possible embodiments, and the invention is not to be limited thereto.

The novel features considered characteristic of my invention are set forth with particularity in the appended claim. The invention itself, however, both as to its organization and its method of operation, together with additional objects and advantages thereof, will best be understood from the following description of a specific embodiment when read in connection with the accompanying drawings, in which:

Figure 1 is a side elevational view of a toy flatiron, and shows portions broken away to expose the interior mechanism.

Figure 2 is a top, or plan view of the toy flatiron.

Figure 3 is a sectional elevation taken along the line 3—3 of Figure 1, looking in the direction indicated by the arrows.

Figure 4 is a rear elevational view of the toy flatiron and shows a portion in section which is

2

taken along the line 4—4 of Figure 2, looking in the direction indicated by the arrows, and

Figure 5 is a sectional detail view of a part, and shows a means of connecting and holding together two parts of the toy.

Referring in detail to the parts, 11 designates a base portion, preferably made of a lightweight metal or any other suitable material, the exterior of which is finished to simulate, in appearance, the steel base of an actual flatiron such as is commonly used in a household. The said base 11 is formed with an upwardly projecting peripheral rim 12, which has formed upon each side thereof, inwardly depressed lips 13 to hold in place an upper casing or housing 14, preferably of any suitable translucent material, and which is formed at its lower end and at each side, with a lug formation 15, adapted to engage the aforesaid lip 13 to hold and lock said base portion and said upper casing together.

The said base portion has the contour of the base of an actual flatiron while the upper casing is shaped to fit within the rim of the base portion. The said upper casing is also formed in contour to resemble the upper portion of an actual flatiron. The said upper casing 14, is further provided with upwardly projecting portions 16 and 17, to which a handle 18 is secured.

A portion of the upper casing 14 is extended rearwardly as at 14' and rests upon a ledge 19, formed upon the base portion 11.

Inside of the said upper casing 14, there is mounted a metallic clip or holding member 20, which is attached to the casing by means of a rivet-like lug 21, which is formed integrally with the said casing and is sweated and pressed into a perforation in the said clip or holding member 20. The said clip or holding member 20 has an angular end extension 22, which is adapted to hold an electric light bulb 23, one terminal 24 of which engages the positive terminal 25 of a dry battery 26 held in position by the said clip or holding member 20. The opposite end of the said clip or holding member is formed with a short, angular projecting end 27, to which is secured, by means of a pin 28, a block 29 of any suitable electric insulating material. To the said insulating block 29 there is attached a contact point 30 which, in turn, has secured to it a spring contact lip 31, adapted to engage the negative end of the said dry battery 26. The pin 28 carries a pivotally connected switch lever 32, which is adapted to engage the contact point. The outer end of the switch lever 32 carries upon it a cap 33 of any suitable insulating material.

The positive terminal **25** of the dry battery **26** makes an electrical contact with the said end terminal **24** of the light bulb **23** while the outer terminal **35** of the light bulb connects with the negative side of the battery through its said outer terminal, clip or holding member **20**, switch pin **28**, switch lever **32** (when in closed position), contact point **30** and contact lip **31**, the latter making contact with the base or negative end of the said dry battery.

The switch is shown in its circuit closing position by the full lines in Figure 1, and by the dot-and-dash lines in Figure 4. Its open position is shown by the full lines in Figure 4.

A cord **36**, knotted at one end as at **37**, is attached to the rearwardly projecting portion **14'** of the upper casing **14**, and has attached to its outer end by the knot **38**, a button-like member **39** which is intended to simulate the usual type of plug-in member of an electrical conductor cord.

The words "off" and "on" may be marked upon the casing to indicate the off and on position of the switch lever.

When the electrical current is turned on, the illuminated light bulb will produce a glow through the translucent material of the upper casing and add to the joy and delight of the user.

In the foregoing description, the electric current mentioned to illuminate the light bulb is provided by the dry battery shown in the drawing. However, the electric house current may be employed by interposing a transformer to reduce the current to a low, harmless voltage which will be sufficient to illuminate the light bulb in the toy flatiron, and the cord shown will be replaced by an electric current conductor having a regulation plug.

I claim:

A toy flatiron, comprising a body portion simulating a flat iron and made of translucent plastic material, a base member removably attached to said body portion, the said base member being formed with a peripheral, upwardly extending flange and clips thereon to engage complementary clip members upon the said body portion to hold the said parts together, a miniature light bulb mounted within said body portion, a flashlight battery removably mounted in said body and adapted to supply electrical energy to said miniature light bulb to illuminate the said body portion, the said body portion being formed with a rearwardly extending housing, a metallic arm pivotally mounted in said rearwardly extending housing, insulated therefrom and having electrical connection with the said flashlight battery and said light bulb, a contact point insulated from said metallic arm but having electrical connection with said light bulb adapted to engage said metallic arm to close a circuit to said light bulb and a handle upon the said body portion, the upper end of said pivotal metallic arm extending outwardly through a slot in said body portion to provide hand manipulation to close or open the circuit to the light bulb.

MORRIS SORKIN.

REFERENCES CITED

The following references are of record in the file of this patent:

UNITED STATES PATENTS

Number	Name	Date
1,722,515	Austin	July 30, 1929
2,179,890	Kaplan	Nov. 14, 1939
2,248,390	Schaad	July 8, 1941