US 20150343530A1

(19) United States

(12) Patent Application Publication

(10) Pub. No.: US 2015/0343530 A1

(43) Pub. Date: Dec. 3, 2015

Duncan et al.

(54) SYSTEMS AND METHODS FOR MONITORING CASTINGS

(71) Applicant: **Elwha LLC**, Bellevue, WA (US)

(72) Inventors: **William D. Duncan**, Mill Creek, WA (US); **Roderick A. Hyde**, Redmond, WA (US); **Jordin T. Kare**, Seattle, WA (US); **Lowell L. Wood, JR.**, Bellevue, WA (US)

(21) Appl. No.: **14/292,328**

(22) Filed: **May 30, 2014**

Publication Classification

(51) **Int. Cl.**
B22D 46/00 (2006.01)

(52) **U.S. Cl.**
CPC ***B22D 46/00*** (2013.01)

(57) **ABSTRACT**

A control system for a casting process includes a sensor positioned to monitor a property of a cast product during the casting process and provide a corresponding sensing signal. The control system also includes a processing circuit configured to generate a real-time model of the cast product based on the corresponding sensing signal and determine a control variable using the real-time model of the cast product. The control variable relates to a real-time modification of the cast product.

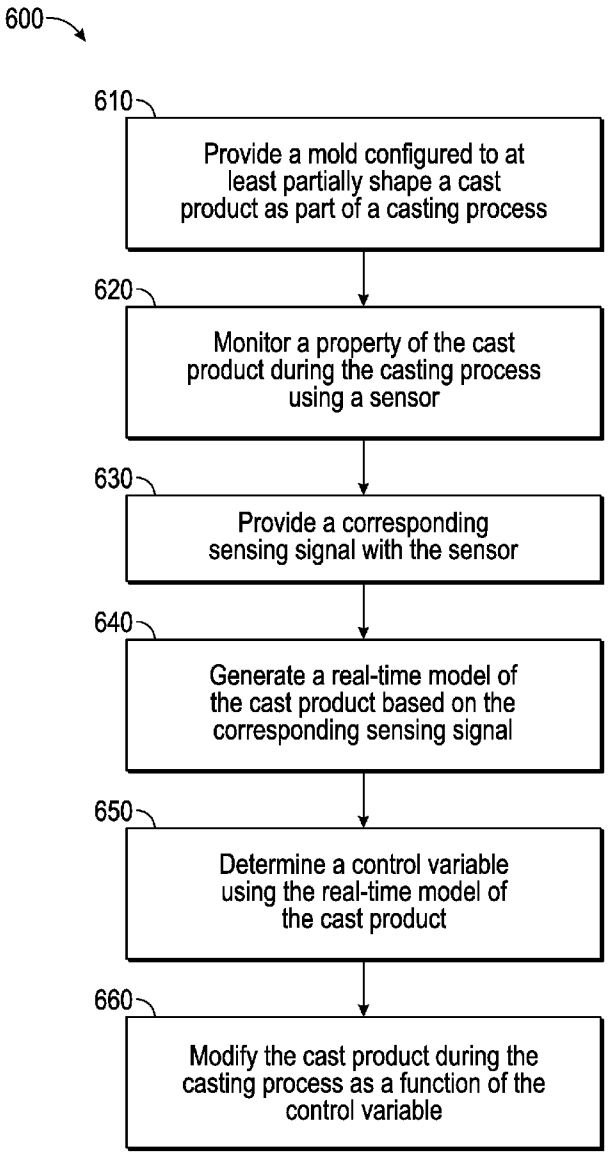

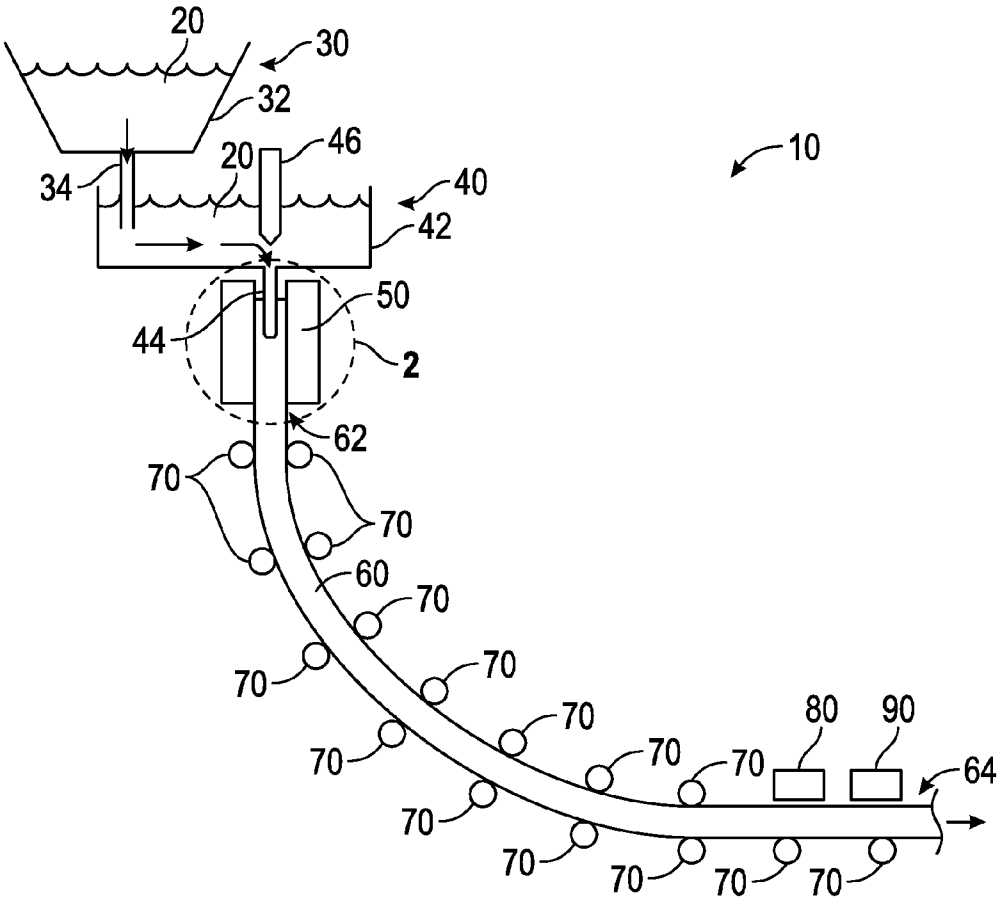
20
30
32
46
20
34
40
42
10
50
44
2
62
70
70
60
70
70
70
70
70
70
70
70
70
70
70
80
90
64

FIG. 1

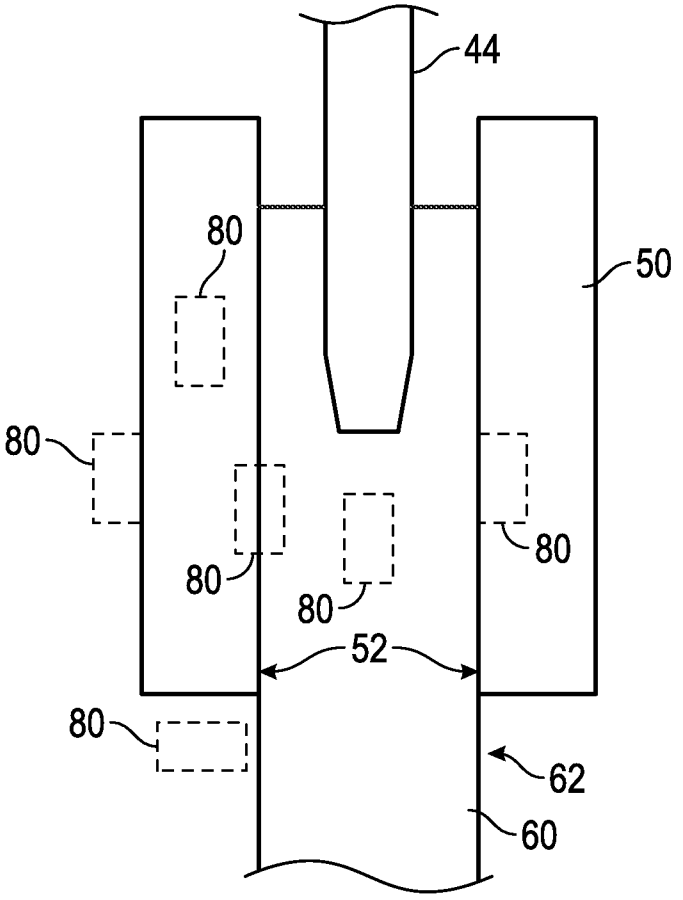

FIG. 2

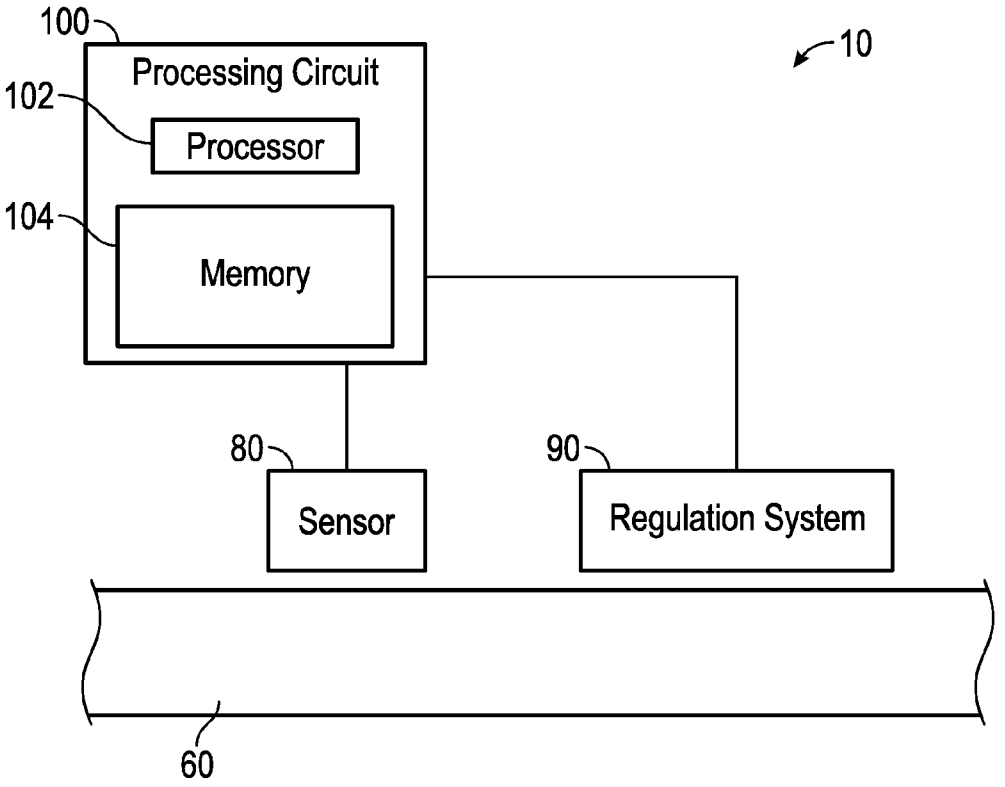
100
Processing Circuit
10
102
Processor
104
Memory
80
Sensor
90
Regulation System
60

FIG. 3

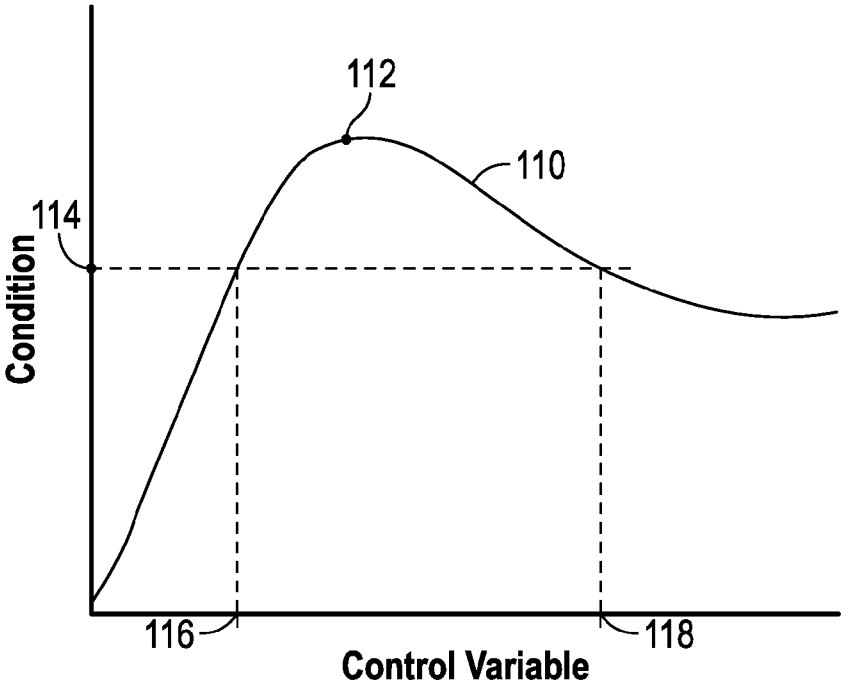
112
110
114
Condition
116
118
Control Variable

FIG. 4

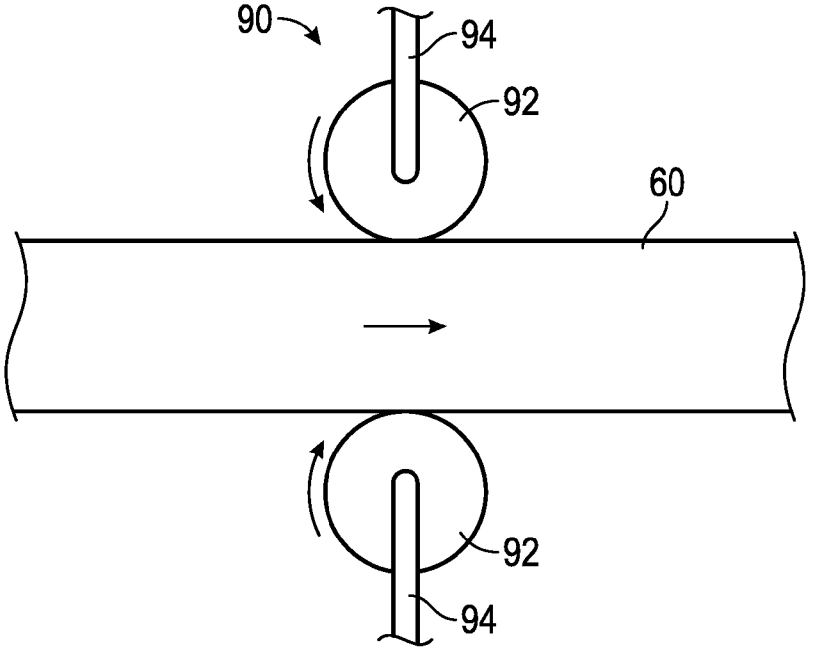
90
94
92
60
92
94

FIG. 5

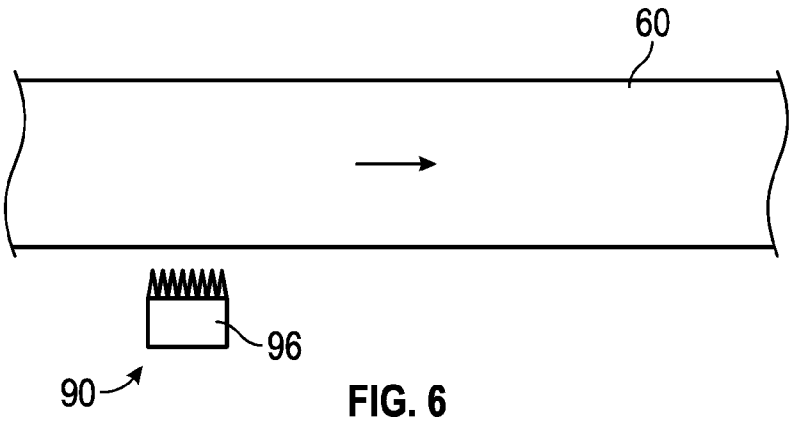

FIG. 6

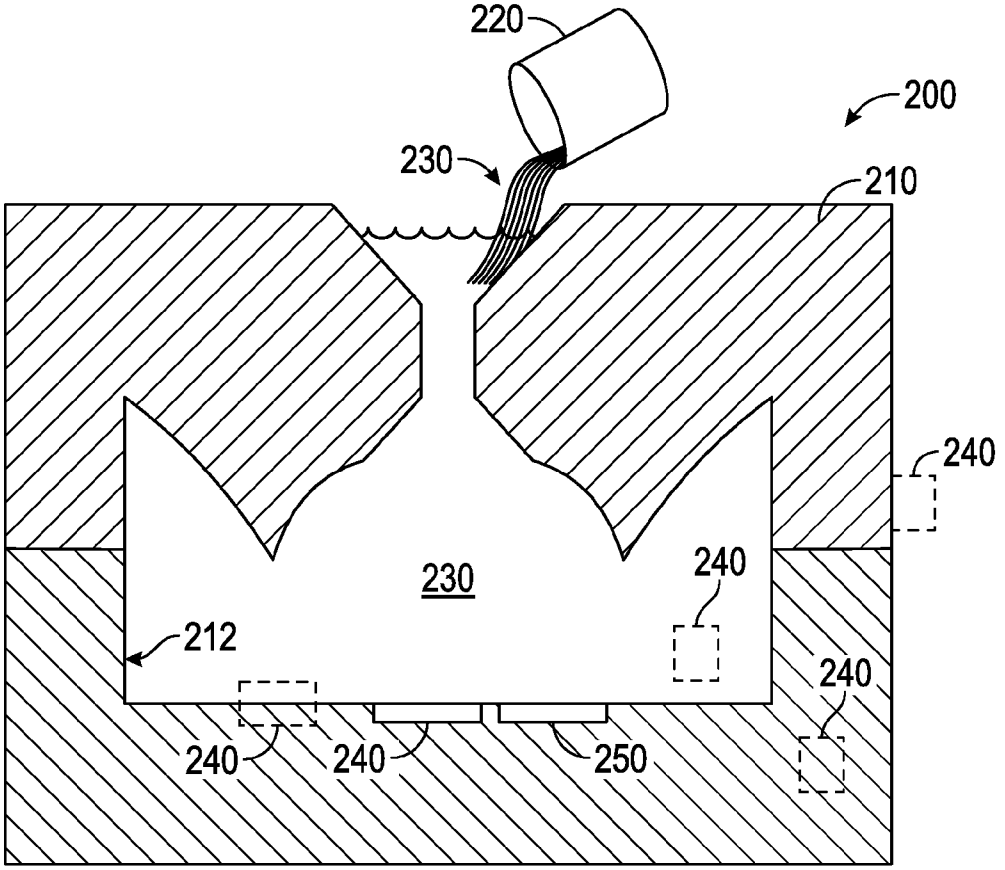

FIG. 7

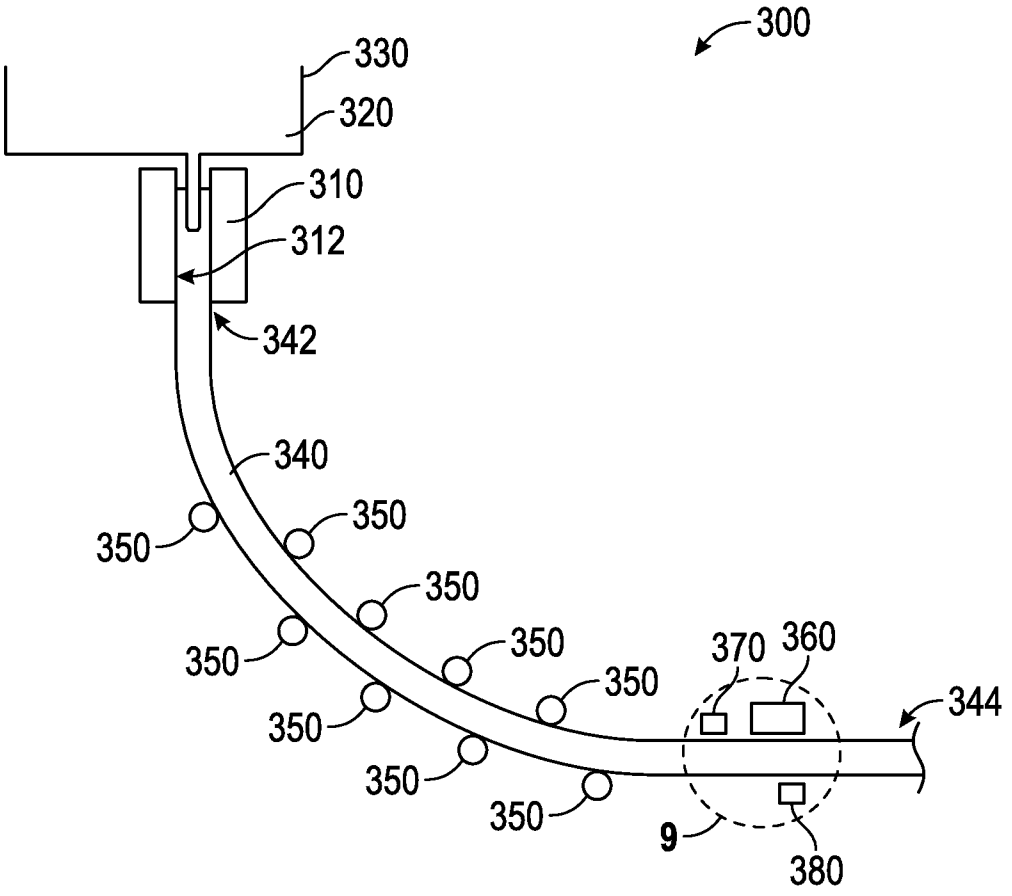
300
330
320
310
312
342
340
350
350
350
350
350
350
350
350
350
370
360
344
9
380

FIG. 8

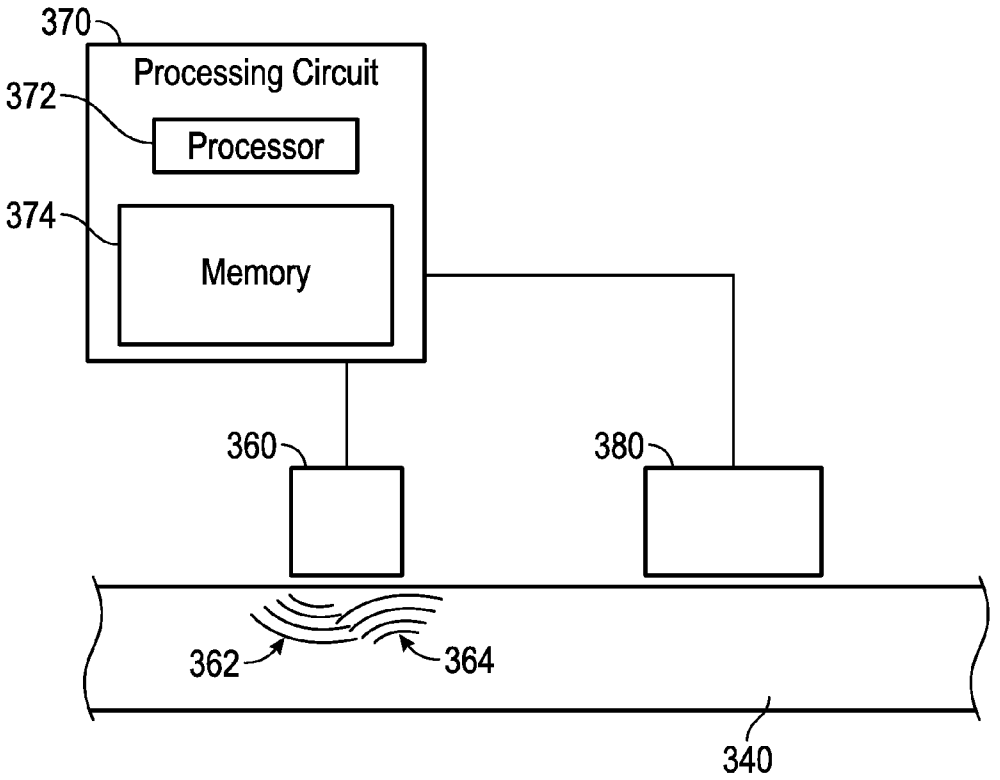
370
Processing Circuit
372
Processor
374
Memory
360
380
362
364
340

FIG. 9

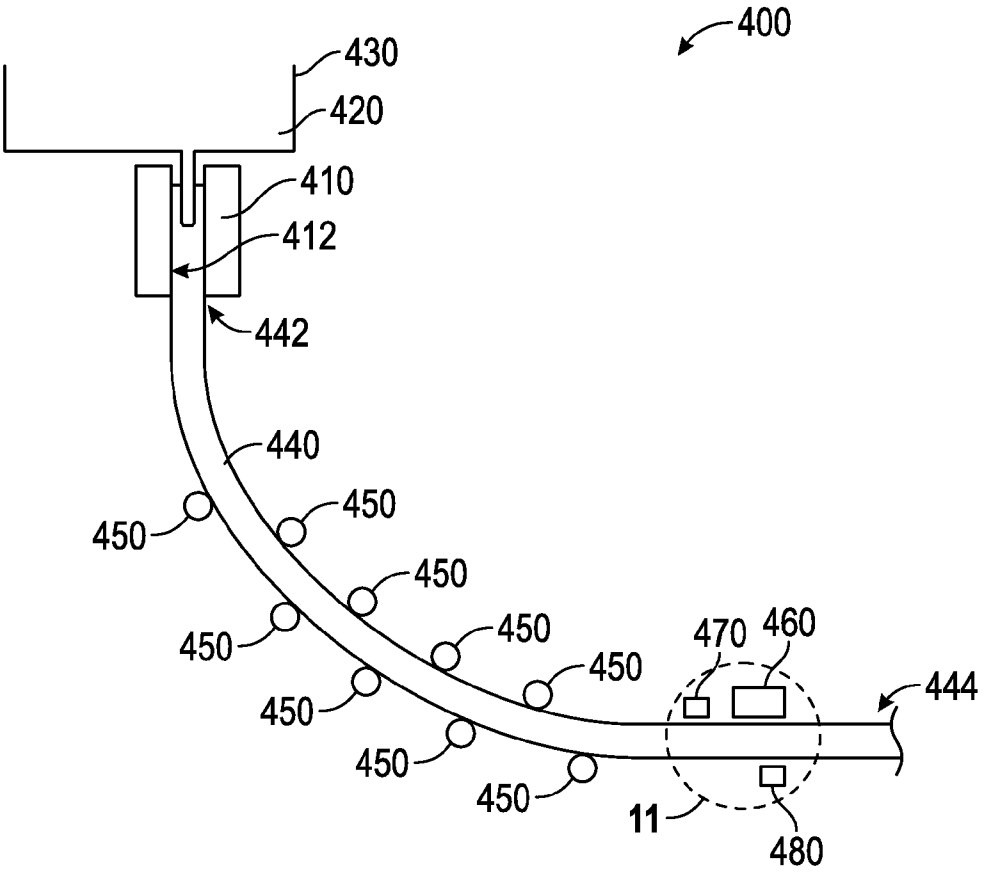
400
430
420
410
412
442
440
450
450
450
450
450
450
450
450
450
470
460
444
11
480

FIG. 10

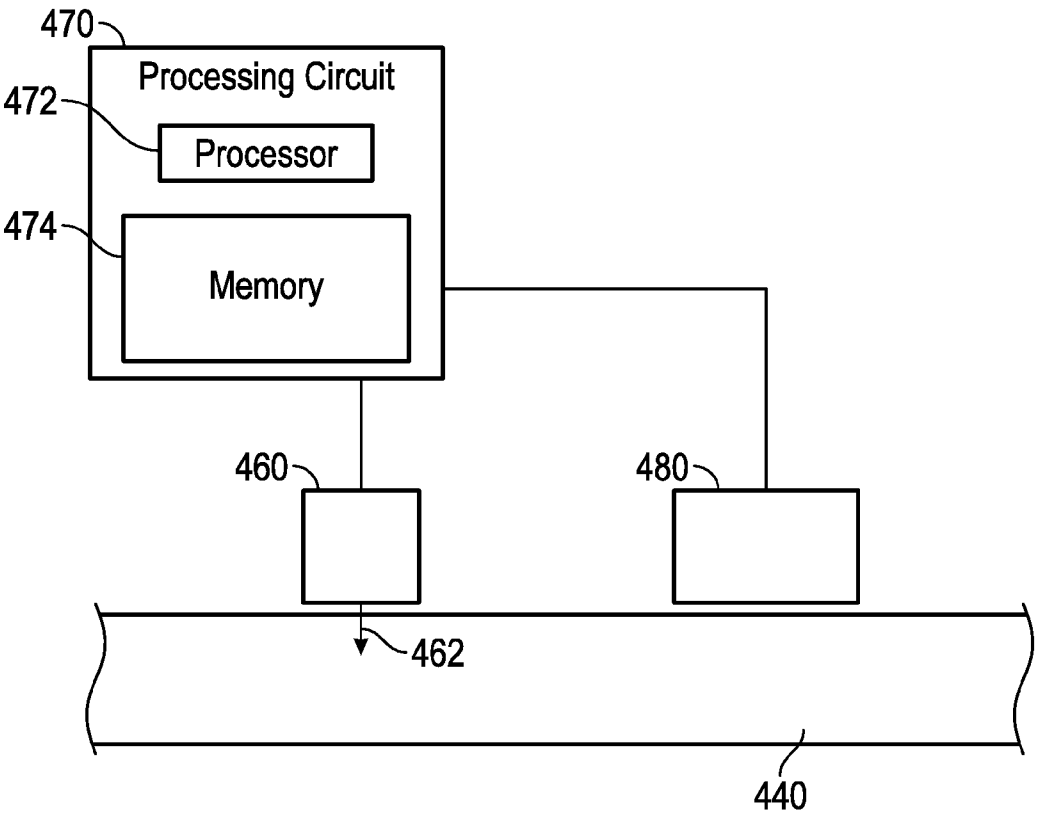
470
Processing Circuit
472
Processor
474
Memory
460
480
462
440

FIG. 11

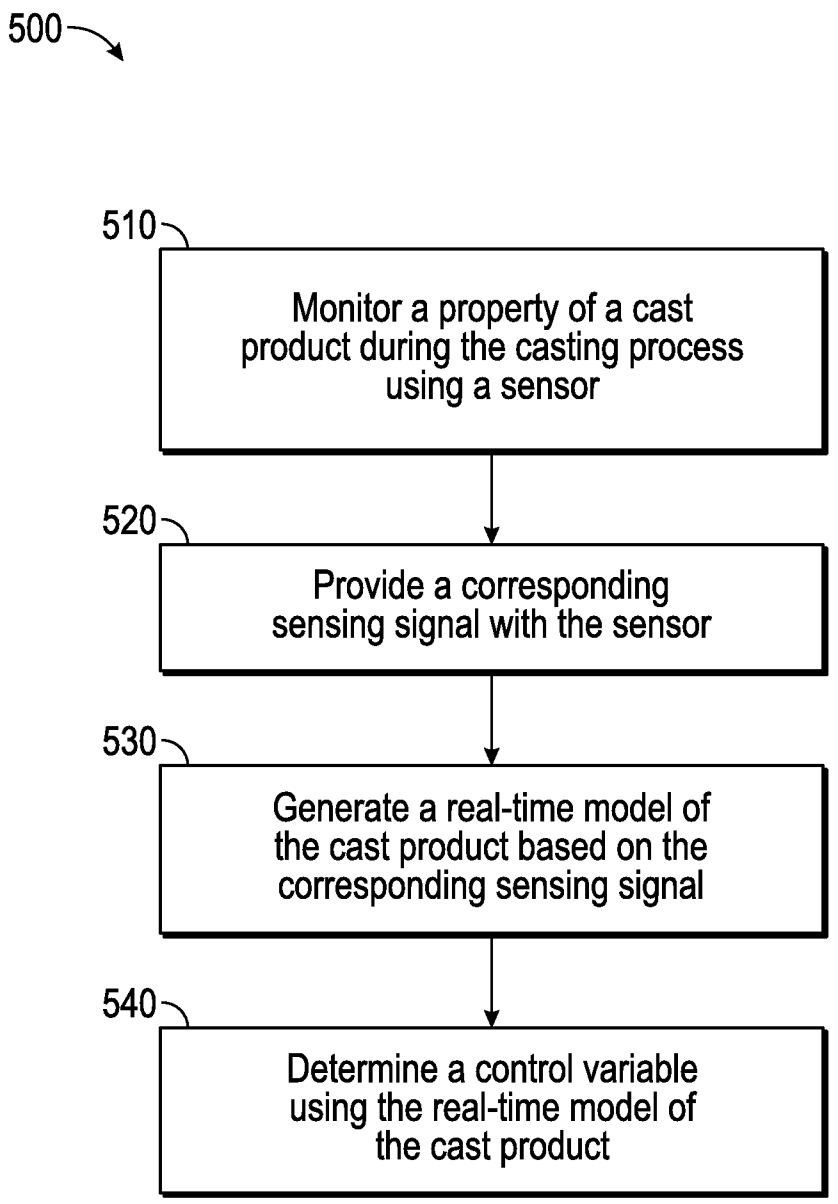
500
510
Monitor a property of a cast product during the casting process using a sensor
520
Provide a corresponding sensing signal with the sensor
530
Generate a real-time model of the cast product based on the corresponding sensing signal
540
Determine a control variable using the real-time model of the cast product

FIG. 12

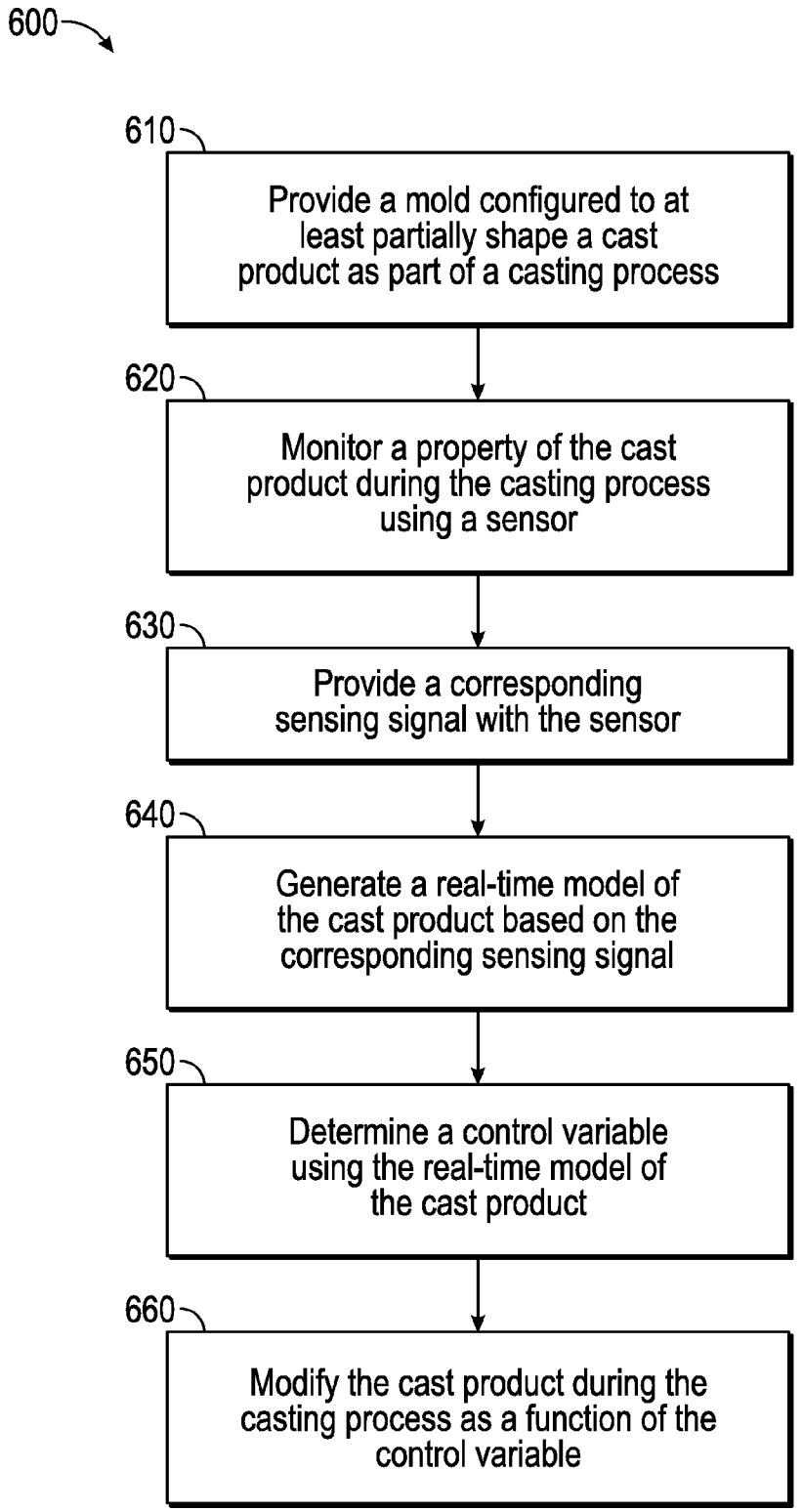
600
610
Provide a mold configured to at least partially shape a cast product as part of a casting process
620
Monitor a property of the cast product during the casting process using a sensor
630
Provide a corresponding sensing signal with the sensor
640
Generate a real-time model of the cast product based on the corresponding sensing signal
650
Determine a control variable using the real-time model of the cast product
660
Modify the cast product during the casting process as a function of the control variable

FIG. 13

SYSTEMS AND METHODS FOR MONITORING CASTINGS

BACKGROUND

[0001] Casting processes are used to produce various cast products. Continuous casting processes may produce a semi-finished cast product (e.g., an ingot, a billet, a bloom, a slab, etc.) that is later subjected to secondary processing (e.g., cold-worked, hot-worked, etc.) to produce a final shape. Batch casting (e.g., investment casting, die casting, sand casting, etc.) is used to produce cast products that may not be subjected to secondary processing.

[0002] Traditional casting processes involve pouring a molten material into a mold and thereafter removing the cast product. The shape of the mold and the use of auxiliary design features (e.g., a sprue having a particular shape) are used to control one or more properties of the cast product (e.g., porosity). Defects or other deficiencies in the cast product are traditionally measured after the cast product has solidified, thereby requiring additional processing steps to produce a cast product that meets one or more design specifications. In other casting processes, cast products are iteratively produced until the design specifications are satisfied (e.g., the shape or position of the sprue may be varied between pours). Secondary processing or iterative production is expensive, produces non-uniform cast products, and reduces the efficiency of the casting process.

SUMMARY

[0003] One embodiment relates to a control system for a casting process. The control system includes a sensor positioned to monitor a property of a cast product during the casting process and provide a corresponding sensing signal. The control system also includes a processing circuit configured to generate a real-time model of the cast product based on the corresponding sensing signal and determine a control variable using the real-time model of the cast product. The control variable relates to a real-time modification of the cast product.

[0004] Another embodiment relates to a casting apparatus that includes a mold, a sensor, a processing circuit, and a regulation system. The mold is configured to receive molten material as part of a casting process and includes a sidewall that at least partially shapes a cast product. The sensor is positioned to monitor a property of the cast product during the casting process and provide a corresponding sensing signal. The processing circuit is configured to generate a real-time model of the cast product based on the corresponding sensing signal and determine a control variable using the real-time model of the cast product. The regulation system is configured to modify the cast product during the casting process as a function of the control variable.

[0005] Still another embodiment relates to a casting apparatus that includes a mold, an ultrasound transducer, a processing circuit, and a regulation system. The mold is configured to receive molten material as part of a casting process and includes a sidewall that at least partially shapes a cast product. The ultrasound transducer is positioned to engage the cast product with a plurality of ultrasound waves, interaction of the plurality of ultrasound waves with the cast product producing a plurality of response signals. The processing circuit is configured to determine a volumetric flow property of the cast product during the casting process by evaluating a Doppler shift based on the plurality of response signals and determine a control variable using the volumetric flow property. The regulation system is configured to modify the cast product during the casting process as a function of the control variable.

[0006] Yet another embodiment relates to a casting apparatus that includes a mold, a first probe, a processing circuit, and a regulation system. The mold is configured to receive molten material as part of a casting process and includes a sidewall that at least partially shapes a cast product. The first probe is configured to engage the cast product with a test signal and provide a sensing signal relating to a property of the cast product. The processing circuit is configured to determine a volumetric temperature profile of the cast product during the casting process based on the sensing signal and determine a control variable using the volumetric temperature profile. The regulation system is configured to modify the cast product during the casting process as a function of the control variable.

[0007] Another embodiment relates to a method for actively controlling a casting process. The method includes monitoring a property of a cast product during the casting process using a sensor, providing a corresponding sensing signal with the sensor, generating a real-time model of the cast product based on the corresponding sensing signal, and determining a control variable using the real-time model of the cast product. The control variable relates to a real-time modification of the cast product.

[0008] Another embodiment relates to a method for actively controlling a casting process. The method includes providing a mold configured to at least partially shape a cast product as part of a casting process, monitoring a property of the cast product during the casting process using a sensor, providing a corresponding sensing signal with the sensor, generating a real-time model of the cast product based on the corresponding sensing signal, determining a control variable using the real-time model of the cast product, and modifying the cast product during the casting process as a function of the control variable.

[0009] Another embodiment relates to a method of manufacturing a cast product. The method includes providing molten material to a mold having a sidewall configured to at least partially shape a cast product as part of a casting process, engaging the cast product with a plurality of ultrasound waves using an ultrasound transducer, interaction of the plurality of ultrasound waves with the cast product producing a plurality of response signals, determining a volumetric flow property of the cast product during the casting process by evaluating a Doppler shift based on the plurality of response signals with a processing circuit, determining a control variable using the volumetric flow property, and modifying the cast product during the casting process as a function of the control variable with a regulation system.

[0010] Another embodiment relates to a method of manufacturing a cast product. The method includes providing a molten material to a mold having a sidewall configured to at least partially shape a cast product as part of a casting process, engaging the cast product with a test signal using a first probe configured to provide a sensing signal relating to a property of the cast product, determining a volumetric temperature profile of the cast product during the casting process with a processing circuit based on the sensing signal, determining a control variable using the volumetric temperature profile, and

modifying the cast product during the casting process as a function of the control variable with a regulation system.

[0011] The foregoing summary is illustrative only and is not intended to be in any way limiting. In addition to the illustrative aspects, embodiments, and features described above, further aspects, embodiments, and features will become apparent by reference to the drawings and the following detailed description.

BRIEF DESCRIPTION OF THE FIGURES

[0012] FIG. **1** is a schematic view of a continuous casting apparatus including a mold, a sensor, and a regulation system, according to one embodiment.

[0013] FIGS. **2-3** are detail views of the casting apparatus shown in FIG. **1**, according to one embodiment.

[0014] FIG. **4** is a graphical representation of a casting function that relates to a condition of a cast product and is a function of a control variable, according to one embodiment.

[0015] FIG. **5** is a schematic view of a regulation system including an actuator, according to one embodiment.

[0016] FIG. **6** is a schematic view of a thermal regulation system, according to one embodiment.

[0017] FIG. **7** is a schematic sectional view of a batch casting apparatus including a mold, a sensor, and a regulation system, according to one embodiment.

[0018] FIG. **8** is a schematic view of a continuous casting apparatus including a mold, an ultrasound transducer, and a regulation system, according to one embodiment.

[0019] FIG. **9** is a detail view of the casting apparatus shown in FIG. **8**, according to one embodiment.

[0020] FIG. **10** is a schematic view of a continuous casting apparatus including a mold, a probe, and a regulation system, according to one embodiment.

[0021] FIG. **11** is a detail view of the casting apparatus shown in FIG. **10**, according to one embodiment.

[0022] FIGS. **12-13** are schematic views of methods for controlling a casting process, according to various embodiments.

DETAILED DESCRIPTION

[0023] In the following detailed description, reference is made to the accompanying drawings, which form a part hereof. In the drawings, similar symbols typically identify similar components, unless context dictates otherwise. The illustrative embodiments described in the detailed description, drawings, and claims are not meant to be limiting. Other embodiments may be utilized, and other changes may be made, without departing from the spirit or scope of the subject matter presented here.

[0024] According to one embodiment, a casting process is actively controlled to reduce the prevalence of defects within cast products. In one embodiment, the casting process begins with pouring molten material into a mold and continues until the molten material solidifies (e.g., until all of the molten material solidifies). In another embodiment, the casting process begins with pouring molten material into a mold and continues until the cast product cools to ambient temperature. A sensor monitors a property of the cast product during the casting process, and a processing circuit determines a control variable relating to a real-time modification (i.e., an active modification, an intra-run modification, a modification prior to complete solidification of the cast product, etc.) of the cast product. A regulation system is configured to modify the cast product during the casting process as a function of the control variable.

[0025] Referring to the embodiment shown in FIGS. **1-2**, a casting apparatus, shown as continuous casting apparatus **10**, is operated to perform a casting process. According to one embodiment, the casting process is a continuous casting process. As part of the continuous casting process, a molten material (e.g., plastic, metal, etc.) is shaped into a semi-finished cast product (e.g., an ingot, a billet, a bloom, a slab, etc.) in a primary processing step. The semi-finished cast product may be thereafter subjected to a secondary processing step (e.g., hot-worked, cold-worked, etc.) and shaped into a finished cast product. In other embodiments, the molten material is shaped into a finished cast product. According to the embodiment shown in FIGS. **1-2**, molten material **20** is stored within ladle **30**. In one embodiment, ladle **30** includes main body **32** and spout **34**. Molten material **20** is provided to tundish **40** through spout **34**, according to one embodiment. As shown in FIG. **1**, tundish **40** includes main body **42** and shroud **44**. According to one embodiment, molten material **20** flows from main body **42** of tundish **40**, through shroud **44**, and into a mold, shown as mold **50**. Stopper **46** may vary a flow characteristic (e.g., a flow rate) of molten material **20** from tundish **40**.

[0026] Mold **50** is configured to receive molten material as part of the continuous casting process. According to the embodiment shown in FIGS. **1-2**, mold **50** includes a sidewall, shown as sidewall **52**, that at least partially shapes molten material **20** into a cast product, shown as cast product **60**. In one embodiment, mold **50** includes a plurality of plates having inner surfaces that define sidewalls **52**. The plurality of plates may be cooled (e.g., with water) to facilitate at least partially shaping cast product **60**.

[0027] As shown in FIG. **1**, cast product **60** includes first end **62** having a vertical orientation and second end **64** having a horizontal orientation. According to the embodiment shown in FIG. **1**, a plurality of guides, shown as rollers **70**, facilitate the transition of cast product **60** between the vertical and horizontal orientations. In one embodiment, the portion of cast product **60** that transitions between first end **62** and second end **64** defines a curved zone. According to another embodiment, cast product **60** includes first and second ends both having a vertical orientation, both having a horizontal orientation (i.e., continuous casting apparatus **10** may be a horizontal casting apparatus), or having still another orientation.

[0028] Referring still to the embodiment shown in FIGS. **1-2**, continuous casting apparatus **10** includes sensor **80**. Sensor **80** is positioned to monitor a property of cast product **60** during the continuous casting process. In one embodiment, the property of cast product **60** includes at least one of a temperature, a flow, a stress, a strain, a porosity, a viscosity, a phase boundary, a conductivity, a current, and a magnetic field of cast product **60**. Sensor **80** may measure the property directly (e.g., sensor **80** may include a strain gauge, sensor **80** may measure the current or flow, etc.) or facilitate the indirect measurement of the property (e.g., sensor **80** may be configured to emit beams that scatter as a function of porosity, etc.).

[0029] As shown in FIG. **1**, sensor **80** is positioned to monitor second end **64** of cast product **60**. In other embodiments, sensor **80** is positioned along the curved zone of cast product **60** or positioned to monitor first end **62** of cast product **60**. As shown in FIG. **2**, sensor **80** may be positioned to monitor cast

product **60** as it exits mold **50** or positioned to monitor cast product **60** within mold **50**. By way of example, sensor **80** may be coupled to sidewall **52** of mold **50**. Sensor **80** may be disposed along an inner surface of sidewall **52** such that sensor **80** engages an outer surface of cast product **60**. In another embodiment, sensor **80** protrudes into an inner volume of mold **50** such that sensor **80** engages an inner volume of cast product **60**. Such a sensor **80** may facilitate intensive measurement of cast product **60**. By way of example sensor **80** may include a thermocouple. In other embodiments, sensor **80** is disposed entirely within an inner volume of mold **50**. In still other embodiments, sensor **80** is positioned along an outer surface of mold **50** or within an inner volume of sidewall **52**. Continuous casting apparatus **10** may include a plurality of sensors **80** positioned to monitor a single property at various locations of cast product **60**, a plurality of properties at a single location of cast product **60**, or a plurality of properties at various locations of cast product **60**.

[0030] In one embodiment, sensor **80** is configured to monitor the property at an inner volume of cast product **60**. In another embodiment, sensor **80** is configured to monitor the property at an outer surface of cast product **60**. Sensor **80** may be positioned at least partially within the inner volume of cast product **60**, positioned along an outer surface of cast product **60**, or spaced from cast product **60**. In one embodiment, sensor **80** protrudes into the inner volume through an outer surface of cast product **60**. By way of example, sensor **80** may include a thermocouple. By way of another example, sensor **80** may include at least one of a strain gauge, a flow meter, a force gauge, a viscometer, an ultrasound transducer, an x-ray detector, a resistor, a current meter, and a magnetometer. In another embodiment, sensor **80** includes a transmitter configured to wirelessly convey the corresponding sensing signal from within cast product **60**. In still another embodiment, sensor **80** is spaced from cast product **60** and configured to remotely monitor the property of cast product **60**. By way of example, sensor **80** may include a pyrometer. By way of another example, sensor **80** may include at least one of a thermal imager, an ultrasound transducer, an x-ray detector, a microscope, and a magnetometer.

[0031] According to one embodiment, the property monitored by sensor **80** includes a temperature of cast product **60**. By way of example, sensor **80** may be positioned to monitor a temperature at an outer surface of cast product **60**. By way of another example, sensor **80** may be positioned to monitor a temperature within cast product **60**. According to another embodiment, sensor **80** is positioned to monitor a flow of material (e.g., molten material) within cast product **60**. According to still other embodiments, sensor **80** is positioned to monitor at least one of a stress (e.g., a stress within the material of cast product **60**), a strain (e.g., a strain within the material of cast product **60**), a porosity of cast product **60**, a phase boundary (e.g., a boundary between molten and solid material, a boundary between two or more constituents of cast product **60**, etc.) within cast product **60**, a conductivity of cast product **60**, a current flow through cast product **60**, and interaction of a magnetic field with cast product **60**.

[0032] In one embodiment, sensor **80** monitors the property of cast product **60** and provides a corresponding sensing signal. The corresponding sensing signal may relate to the property of cast product **60**. By way of example, sensor **80** may be configured to monitor the temperature of cast product **60**, and the corresponding sensing signal may have a voltage that varies based on the measured temperature of cast product **60**.

[0033] Referring still to the embodiment shown in FIG. **1**, continuous casting apparatus **10** includes regulation system **90** configured to modify cast product **60** (e.g., change a property of cast product **60**, physically alter cast product **60**, etc.) during the casting process. Regulation system **90** reduces the prevalence of defects within cast product **60** (e.g., irregular grain boundaries, porosity, overall dimensional shape, etc.), according to one embodiment. Regulation system **90** modifies cast product **60** during the casting process, thereby reducing or eliminating the portions of cast product **60** that contain defects prior to completion of the continuous casting process. In one embodiment, regulation system **90** reduces the portion of cast product **60** having properties below a threshold value (e.g., tensile strength below a published value, porosity above a maximum value, etc.). Accordingly, regulation system **90** reduces the need to subsequently rework cast product **60** (e.g., reduces the need to rework certain portions of cast product **60**, reduces the level of rework required, etc.), thereby reducing the overall production costs.

[0034] In one embodiment, regulation system **90** is configured to apply a force to cast product **60** during the casting process. In another embodiment, regulation system **90** is configured to vary the temperature of at least a portion of cast product **60** (e.g., apply heat to cast product **60**, apply water or another cooling fluid to cast product **60**, etc.). In still another embodiment, regulation system **90** is configured to engage cast product **60** with an electric signal (e.g., a current, an electric field, etc.). In yet another embodiment, regulation system **90** is configured to apply a magnetic field to cast product **60**.

[0035] Referring still to FIG. **1**, molten material **20** is initially stored within ladle **30**. In one embodiment, molten material **20** is poured into ladle **30** from a furnace. As molten material **20** flows into mold **50**, portions thereof begin to solidify through nucleation. Portions of molten material **20** having a lower temperature (e.g., a temperature below the freezing temperature) begin to solidify before portions of molten material **20** having a higher temperature (e.g., a temperature above the freezing temperature). In one embodiment, the outer portions of cast product **60** begin to solidify before the inner portions of cast product **60**. By way of example, cast product **60** may have an outer layer of solidified material (e.g., a layer in contact with sidewalls **52** of mold **50**) and an inner volume of molten material **20** at first end **62**. The entire volume of cast product **60** may be solidified at second end **64**.

[0036] Upon initial solidification, molten material **20** may transition into various solid phases. The solid phases that are formed may be related to the composition of molten material **20**. In one embodiment, molten material **20** is steel and includes a mixture of iron and carbon. Molten material **20** may initially solidify into 6-ferrite or austenite. The solid phase that is formed may vary based upon the composition of molten material **20**. In one embodiment, molten material **20** is a hypoeutectic steel that includes iron and 0.75 weight percent carbon, and austenite is initially formed during solidification. Further reduction in the temperature may result in the formation of ferrite and cementite. The strength, ductility, or other characteristics of cast product **60** may be impacted by the solid phases formed therein. According to one embodiment, regulation system **90** is configured to vary the solid

phases within cast product **60** by controlling the eutectoid reaction (e.g., regulation system **90** dispersion strengthens the alloy). By way of example, regulation system **90** may introduce an agent (e.g., carbon) to cast product **60** to change the composition of the alloy and increase the amount of cementite therein (e.g., to increase the carbon content of the steel). By way of another example, regulation system **90** may be a burner and reduce the grain size by controlling the temperature of cast product **60**. By way of still another example, regulation system **90** may include a spray nozzle configured to apply a cooling fluid, thereby increasing the cooling rate during the eutectoid reaction and increasing the strength of the alloy. By way of yet another example, regulation system **90** may lower the transformation temperature at which the eutectoid reaction begins.

[0037] Referring next to FIG. **3**, a partial block diagram of continuous casting apparatus **10** is shown, according to one embodiment. Continuous casting apparatus **10** may be configured to actively modify cast product **60** during a continuous casting process using a real-time model of cast product **60**. As shown in FIG. **3**, continuous casting apparatus **10** includes processing circuit **100**. Processing circuit **100** may be implemented as a general-purpose processor, an application specific integrated circuit (ASIC), one or more field programmable gate arrays (FPGAs), a digital-signal-processor (DSP), circuits containing one or more processing components, circuitry for supporting a microprocessor, a group of processing components, or other suitable electronic processing components.

[0038] According to the embodiment shown in FIG. **3**, processing circuit **100** includes processor **102** and memory **104**. Processor **102** may include an ASIC, one or more FPGAs, a DSP, circuits containing one or more processing components, circuitry for supporting a microprocessor, a group of processing components, or other suitable electronic processing components. In some embodiments, processor **102** is configured to execute computer code stored in memory **104** to facilitate the activities described herein. Memory **104** may be any volatile or non-volatile computer-readable storage medium capable of storing data or computer code relating to the activities described herein. In one embodiment, memory **104** has computer code modules (e.g., executable code, object code, source code, script code, machine code, etc.) configured for execution by processor **102**. In some embodiments, processing circuit **100** represents a collection of processing devices (e.g., servers, data centers, etc.). In such cases, processor **102** represents the collective processors of the devices, and memory **104** represents the collective storage devices of the devices.

[0039] According to one embodiment, processing circuit **100** is coupled to sensor **80** and regulation system **90**. Processing circuit **100** is configured to evaluate the corresponding sensing signal provided by sensor **80** and generate a real-time model of cast product **60** based on the corresponding sensing signal, according to one embodiment. Processing circuit **100** may determine a control variable using the real-time model of cast product **60**. In one embodiment, processing circuit **100** utilizes a physics simulator or another numerical simulator to generate the real-time model. The control variable is related to a real-time modification of the cast product. In one embodiment, regulation system **90** is configured to modify cast product **60** during the casting process as a function of the control variable. In one embodiment, a control system for a casting process includes sensor **80** and processing circuit **100**.

[0040] Referring still to the embodiment shown in FIG. **3**, processing circuit **100** is configured to generate the real-time model of cast product **60** based on the corresponding sensing signal provided by sensor **80**. In one embodiment, processing circuit **100** generates the real-time model during the continuous casting process (e.g., before termination of the pour). The real-time model may include a computer-based representation of cast product **60**. By way of example, the real-time model may include a plurality of discrete computational nodes that form at least part of a computer-based mesh representing cast product **60**. By way of another example, the real-time model may include a plurality of discrete unit volumes that form at least part of a computer-based model representing cast product **60**.

[0041] According to one embodiment, the real-time model of cast product **60** is based on a parameter (e.g., the material of cast product **60**, the heat transfer coefficient of the material of cast product **60**, the relationship of conductivity or permeability as a function of temperature for the material of cast product **60**, etc.). In one embodiment, processing circuit **100** is configured to derive the parameter empirically using the corresponding sensing signal. In other embodiments, processing circuit **100** is configured to calculate the parameter using numerical simulation. In still other embodiments, the parameter is stored within a memory (e.g., pre-programmed, etc.) or provided by an operator via a user-interface.

[0042] In one embodiment, processing circuit **100** updates the real-time model during the continuous casting process. By way of example, processing circuit **100** may update the real-time model during an elapsed time between the beginning and termination of the pour. Processing circuit **100** may update the real-time model according to a refresh rate. Such an update may include calculating or otherwise simulating one or more values for at least one of the discrete computational nodes or unit volumes. In one embodiment, the refresh rate is related to (e.g., equal to) a sensing rate at which sensor **80** monitors the property of cast product **60**. In another embodiment, the refresh rate is a multiple of the sensing rate (e.g., a refresh rate of half the sensing rate).

[0043] Processing circuit **100** may be configured to generate the real-time model using computer simulation (e.g., numerical simulation, etc.). In one embodiment, processing circuit **100** is configured to perform numerical simulation in real-time (e.g., continuously, according to a refresh rate, etc.). In other embodiments, processing circuit **100** is configured to perform the numerical simulation asynchronously. According to one embodiment, the numerical simulation includes determining at least one of a phase transition within cast product **60**, a thermal transport within cast product **60**, a porosity of at least a region of cast product **60**, a chemical reaction within cast product **60**, a precipitation of the material of cast product **60**, and a segregation within cast product **60**. By way of example, the phase transition may include at least one of a molten-molten phase transition, a molten-solidified phase transition (i.e., the region between the molten and solidified material of cast product **60**), and a solid-solid phase transition (i.e., a transition between different solid-phase regions).

[0044] According to another embodiment, the numerical simulation includes determining at least one of a stress, a strain, a viscosity, a flow, a pressure, a shear force, a body

force, an induction, and a current transport within cast product **60**. By way of example, the body force may include at least one of a force due to gravity and a Lorentz force acting on a unit volume of cast product **60**. By way of another example, a pressure within cast product **60** may occur due to the flow of molten material **20**. Such flow may generate a ferrostatic pressure of the solidifying molten material **20** against the solid outer walls of cast product **60**.

[0045] According to one embodiment, the numerical simulation includes at least one of a space dependence, a time dependence, and a boundary condition dependence of cast product **60**. The space dependence may include computing or otherwise simulating one or more values for different portions of cast product **60** (e.g., different locations along a cross-sectional plane of cast product **60**, different locations along the length of cast product **60**, different locations within the entire cast product **60**, etc.). The time dependence may include computing or otherwise simulating different values for different elapsed times (e.g., measured from the beginning of the pour). Such different values may be computed independently, or later values may be computed using previously-determined values for a particular node or unit volume. In one embodiment, the boundary condition includes at least one of a stress, a heating rate, a cooling rate, and a temperature at a surface of the cast product.

[0046] According to the embodiment shown in FIG. **3**, processing circuit **100** is configured to determine the control variable using the real-time model of cast product **60**. In one embodiment, the control variable relates to at least one of an applied surface heating, an applied surface cooling, an applied surface force, an applied volumetric force, an applied surface displacement, an applied current, an applied magnetic field, and an applied voltage. By way of example, the control variable may include a selection of a real-time modification of cast product **60** (e.g., whether to apply heat or apply a force). By way of another example, the control variable may include a signal relating to a magnitude or actuation profile for regulation system **90**.

[0047] Referring next to FIG. **4**, processing circuit **100** is configured to determine the control variable by optimizing a casting function, shown as casting function **110**. As shown in FIG. **4**, casting function **110** is related to a condition of the cast product and is a function of the control variable. By way of example, the condition may include at least one of a phase, a phase distribution, a porosity, a strength, a stress characteristic, a strain characteristic, a fatigue characteristic, a creep characteristic, a vibrational mode, a vibrational frequency, a ductility, a stress-strain characteristic, and a uniformity of a cast product. By way of another example, the condition may include at least one of an expense, a work input, a heating input, and a cooling input required during the casting process. The condition may be determined using the real-time model of the cast product. By way of example, the condition may be a current condition or a projected future condition, either of which may be calculated based on, or as part of, the real-time model of the cast product. According to one embodiment, casting function **110** provides a fatigue characteristic (e.g., toughness) as a function of the control variable. By way of example, the fatigue characteristic may be a function of the amount of thermal energy removed or applied to a surface of the cast product.

[0048] According to one embodiment, processing circuit **100** is configured to differentiate casting function **110** with respect to the control variable. Such differentiation may be used to determine maxima (e.g., a local maximum, a global maximum, etc.) or minima of casting function **110**. As shown in FIG. **4**, casting function **110** includes one maximum, shown as maximum **112**. In one embodiment, processing circuit **100** is configured to determine the control variable (e.g., the amount of heat to apply to the cast product) based on the control variable associated with maximum **112**. In other embodiments, processing circuit **100** is configured to determine the control variable based on target condition **114** of the cast product. Target condition **114** may be determined by evaluating the real-time model of the cast product. By way of example, target condition **114** may be achieved by applying a first control variable **116** (e.g., a first amount of thermal energy) or a second control variable **118** (e.g., a second amount of thermal energy). According to another embodiment, processing circuit **100** is configured to differentiate casting function **110** with respect to another variable. According to still another embodiment, processing circuit **100** is configured to determine the control variable by integrating casting function **110**. According to yet another alternative embodiment, processing circuit **100** is configured to optimize (e.g., differentiate, integrate, utilize, etc.) still another casting function (e.g., a casting function that relates to other variables).

[0049] In one embodiment, processing circuit **100** is configured to optimize casting function **110** while satisfying a constraint function. The constraint function may establish a threshold value for the control value (e.g., a minimum, a maximum, etc.), may facilitate selection between multiple solutions to casting function **110**, or may facilitate selection between solutions for different casting functions. By way of example, the constraint function may include at least one of a time, a material usage, an expense, a work input, a heating input, and a cooling input associated with the casting process. In one embodiment, processing circuit **100** is configured to optimize two or more casting functions to generate two or more optimized solutions, and the constraint function is configured to facilitate evaluation of, or selection between, the two or more optimized solutions.

[0050] According to another embodiment, casting function **110** is a function of a plurality of variables. In one embodiment, processing circuit **100** is configured to optimize casting function **110** by evaluating the effect on casting function **110** of executing a first control strategy and a second control strategy. By way of example, the first control strategy and the second control strategy may include approaches for determining an appropriate control variable for use by a regulation system. The approaches may include procedures for evaluating or otherwise manipulating casting function **110** (e.g., differentiate casting function **110**, integrate casting function **110**, select the smallest solution to casting function **110** for a particular condition, etc.). Processing circuit **100** simulates execution of the control strategies to facilitate determining the control variable, according to one embodiment. Processing circuit **100** may optimize casting function **110** in real-time or asynchronously. In one embodiment, processing circuit **100** is configured to determine the first control strategy by differentiating casting function **110** with respect to a first variable and determine the second control strategy based by differentiating casting function **110** with respect to a second variable. By way of example, casting function **110** may relate the fatigue strength of a cast product to a temperature of an applied cooling fluid and a flow rate of the applied cooling fluid. The first control strategy may relate the fatigue strength

of the cast product to the temperature of the applied cooling fluid, and the second control strategy may relate the fatigue strength of the cast product to the flow rate of the applied cooling fluid. In one embodiment, processing circuit **100** is configured to optimize casting function **110** by differentiating casting function **110** with respect to the temperature of the applied cooling fluid and with respect to the flow rate of the applied cooling fluid. In still other embodiments, processing circuit **100** is configured to otherwise manipulate casting function **110** (e.g., integrate, evaluate, etc.) to determine the first control strategy and the second control strategy. According to one embodiment, processing circuit **100** evaluates the first control strategy and the second control strategy in parallel. According to another embodiment, processing circuit **100** sequentially evaluates the first control strategy and the second control strategy.

[0051] According to another embodiment, casting function **110** is related to the corresponding sensing signal provided by sensor **80**. By way of example, casting function **110** may be related to a condition of a cast product and a function of the corresponding sensing signal. According to another embodiment, casting function **110** is related to a condition of a cast product and a function of both one or more sensing signals and one or more control variables. According to still another embodiment, processing circuit **100** is configured to determine a control strategy relating one or more control variables to the one or more sensing signals. Processing circuit **100** may be configured to determine the control strategy using a filter relating the casting process, one or more control variables, and the one or more sensing signals. The filter may include a linear filter or a nonlinear filter. In one embodiment, the filter includes a Kalman filter that refines (e.g., takes into account signal noise, etc.) the sensing signals provided by sensor **80**. According to another embodiment, processing circuit **100** is configured to optimize casting function **110** based on a filter relating one or more control variables to one or more sensing signals (e.g., based on a filter relating the casting process, a control variable, and a sensing signal, etc.). In one embodiment, processing circuit **100** evaluates a first control strategy and the second control strategy in parallel. In another embodiment, processing circuit **100** sequentially evaluates a first control strategy and the second control strategy.

[0052] According to one embodiment, processing circuit **100** is configured to determine the control variable as casting function **110** exceeds a threshold value or a threshold gradient (e.g., as the rate at which the fatigue strength is increasing exceeds a threshold). According to another embodiment, processing circuit **100** is configured to determine the control variable by evaluating casting function **110** until an end time (e.g., of the casting process, of the simulation, etc.) is reached. According to still another embodiment, processing circuit **100** is configured to determine the control variable by evaluating casting function **110** until an event occurs. In one embodiment, the event is defined to occur when casting function **110** exceeds a threshold value. In another embodiment, the event is defined to occur when a property of the cast product exceeds a threshold value.

[0053] According to another embodiment, processing circuit **100** is configured to determine the control variable by optimizing a condition of the cast product. By way of example, the condition of the cast product may include a phase, a phase distribution, a porosity, a strength, a stress characteristic, a strain characteristic, a fatigue characteristic, a creep characteristic, a vibrational mode, a vibrational frequency, a ductility, a stress-strain characteristic, and a uniformity of the cast product. By way of another example, the condition of the cast product may include at least one of an expense, a work input, a heating input, and a cooling input required during the casting process. In one embodiment, processing circuit **100** is configured to optimize a condition of the cast product while satisfying a constraint function. By way of example, processing circuit **100** may use the real-time model of the cast product to determine a condition of the cast product and iteratively modify the control variable until a constraint function is satisfied (e.g., until the porosity of the cast product is below a threshold value).

[0054] Referring next to FIGS. **5-6**, regulation system **90** is configured to modify cast product **60** as a function of the control variable. In one embodiment, regulation system **90** is configured to vary an input condition (e.g., a temperature of the molten material provided to the mold, a flow rate of the molten material provided to the mold, a mold temperature, etc.) such that the continuous casting process operates according to a closed-loop control strategy. As shown in FIG. **5**, regulation system **90** includes an actuator, shown as roller **92**, that is configured to apply a force to cast product **60** during the casting process. According to another embodiment, the actuator is another type of device (e.g., linear actuator, etc.). The force applied to cast product **60** may vary based on the control variable. By way of example, the control variable may include information relating to a magnitude, a location, and a direction of the force. According to the embodiment shown in FIG. **5**, roller **92** is moveable along a guide, shown as track **94**. An actuator may move roller **92** along track **94**. Extension of the actuator may move roller **92** toward cast product **60**, thereby increasing the magnitude of the applied force. The actuator may be coupled to a processing circuit and move roller **92** as a function of a control variable. Roller **92** includes a surface that engages an outer surface of cast product **60**, according to one embodiment. As shown in FIG. **5**, roller **92** is configured to apply a surface force to cast product **60** during the casting process. In other embodiments, the actuator is configured to apply a volumetric force to cast product **60**.

[0055] In one embodiment, the real-time model generated by the processing circuit may indicate that cast product **60** has one or more defects at a particular location. Regulation system **90** may modify cast product **60** during the casting process as a function of the control variable determined by processing circuit **100**. In one embodiment, sensor **80** is positioned to monitor the temperature of cast product **60**, and processing circuit **100** is configured to generate the real-time model based on the corresponding sensing signal. Processing circuit **100** may use the real-time model to determine a control value relating a particular force to a particular location of cast product **60**. Regulation system **90** may thereafter apply the force to cast product **60** at the particular location, thereby reducing the prevalence of the defect without subjecting the entire cast product **60** to the modification. Use of the real-time model facilitates evaluation of various properties of cast product **60** based on a single monitored property. Use of the real-time model also facilitates monitoring and actively modifying of cast product **60**.

[0056] Referring now to FIG. **6**, regulation system **90** includes a thermal regulation system configured to vary the temperature of cast product **60** during the casting process. In one embodiment, the thermal regulation system is coupled to processing circuit **100** and is configured to vary the temperature of cast product **60** as a function of a control variable.

According to the embodiment shown in FIG. **6**, the thermal regulation system includes a heater, shown as burner **96**. Burner **96** is configured to apply surface heating to cast product **60**. In another embodiment, the thermal regulation system is configured to provide volumetric heating to cast product **60**. According to another embodiment, the thermal regulation system includes an electrical device configured to resistively heat at least one of a surface and a volume of cast product **60** (e.g., with an applied current, with applied microwaves, etc.). According to still another embodiment, the thermal regulation system is configured to reduce the temperature of cast product **60**. By way of example, the thermal regulation system may include a spray nozzle configured to apply a coolant fluid (e.g., a vaporizable liquid, a heatable gas, a heatable liquid, etc.) to an outer surface of cast product **60**. In one embodiment, the thermal regulation system includes a conduit configured to transport a coolant fluid into thermal contact with cast product **60**. Such a conduit may, for example, contact the outer surface of cast product **60**, or may extend within an interior volume of cast product **60**.

[0057] According to one embodiment, the thermal regulation system selectively heats cast product **60**. The thermal regulation system may selectively heat an outer surface of cast product **60** to a case depth. In one embodiment, the thermal regulation system heats and subsequently cools a portion of cast product **60**. By way of example, the thermal regulation system may heat and quench a portion of a steel cast product **60**. The case depth may include a layer of martensite that is formed after quenching the heated portion of cast product **60**. In other embodiments, the thermal regulation system applies heat and an agent as part of a diffusion processes configured to vary a property of cast product **60**. By way of example, the thermal regulation system may heat and apply carbon, liquid cyanide, nitrogen, or another agent, which diffuses into the outer portion of cast product **60**. Such a process may increase at least one of the strength, hardness, and toughness of a portion of cast product **60**.

[0058] According to another embodiment, regulation system **90** includes an electrical device. In one embodiment, the electrical device is coupled to processing circuit **100** and positioned to engage cast product **60** with an electrical signal. The electrical signal may vary based on a control variable determined by processing circuit **100**. In one embodiment, the electrical device is configured to apply at least one of a current, an electric field, and a voltage to cast product **60**. By way of example, an electric current or an electric field may facilitate volumetric heating of cast product **60**. The volumetric heating may occur during the casting process and may be targeted to a particular portion of cast product **60** (e.g., a portion of cast product **60** having a defect as determined by processing circuit **100** evaluating one or more sensing signals).

[0059] According to yet another embodiment, regulation system **90** includes a magnetic field generator. In one embodiment, the magnetic field generator is coupled to processing circuit **100** and positioned to apply a magnetic field to cast product **60**. The magnetic field may vary based on a control variable determined by processing circuit **100**. By way of example, the strength or direction of the magnetic field may vary as a function of the control variable. In one embodiment, the application of a magnetic field generates a Lorentz force within cast product **60**. Such a Lorentz force may facilitate the application of volumetric forces to cast product **60**. The Lorentz force may be applied during the casting process and may be targeted to a particular portion of cast product **60** (e.g., a portion of cast product **60** having a defect as determined by processing circuit **100** evaluating one or more sensing signals).

[0060] Referring next to the embodiment shown in FIG. **7**, a casting apparatus, shown as batch casting apparatus **200**, includes a mold, shown as mold **210**. According to one embodiment, a ladle, shown as ladle **220**, is configured to provide molten material **230** into mold **210** to produce a cast product as part of a batch casting process. According to the embodiment shown in FIG. **7**, mold **210** includes sidewall **212** that defines an inner volume configured to at least partially shape the cast product.

[0061] According to the embodiment shown in FIG. **7**, batch casting apparatus **200** includes sensor **240** configured to monitor a property of the cast product during the batch casting process and provide a corresponding sensing signal. In one embodiment, a processing circuit is configured to evaluate the corresponding sensing signal, generate a real-time model of the cast product based on the corresponding sensing signal, and determine a control variable using the real-time model of the cast product. The control variable may relate to a real-time modification of the cast product.

[0062] As shown in FIG. **7**, batch casting apparatus **200** includes regulation system **250**. In one embodiment, regulation system **250** is configured to apply a force to the cast product (e.g., to molten material **230**, to a solidified portion of the cast product, etc.) during the casting process. In another embodiment, regulation system **250** is configured to vary the temperature of at least a portion of the cast product (e.g., apply heat to the cast product, apply water or another cooling fluid to the cast product, etc.). In still another embodiment, regulation system **250** is configured to engage the cast product with an electric signal. In yet another embodiment, regulation system **250** is configured to apply a magnetic field to the cast product. By way of example, regulation system **250** may include at least one of thermal regulation system (e.g., a spray nozzle, a burner, etc.), an electrical device, and a magnetic field generator.

[0063] Referring still to FIG. **7**, sensor **240** is integrated into mold **210**. In one embodiment, sensor **240** is coupled to sidewall **212**. According to the embodiment shown in FIG. **7**, sensor **240** is disposed along an inner surface of sidewall **212** such that sensor **240** engages an outer surface of the cast product. According to another embodiment, sensor **240** protrudes into the inner volume of mold **210** such that sensor **240** engages an inner volume of the cast product. By way of example, sensor **240** may include a thermocouple. In another embodiment, sensor **240** includes a transmitter configured to wirelessly convey the corresponding sensing signal from within the cast product. According to another embodiment, sensor **240** is otherwise positioned.

[0064] Referring next to the embodiment shown in FIG. **8**, a casting apparatus, shown as continuous casting apparatus **300**, includes a mold, shown as mold **310**, that is configured to receive molten material **320** as part of a continuous casting process. In another embodiment, the casting apparatus includes a batch casting apparatus that includes a mold configured to receive molten material as part of a batch casting process. As shown in FIG. **8**, molten material **320** flows from tundish **330** into mold **310**. In one embodiment, mold **310** includes a sidewall, shown as sidewall **312**, that at least partially shapes a cast product, shown as cast product **340**. As shown in FIG. **8**, cast product **340** includes first end **342**

having a vertical orientation and second end **344** having a horizontal orientation. A plurality of guides, shown as rollers **350**, facilitates the transition of cast product **340** between the vertical and horizontal orientations. According to the embodiment shown in FIG. **8**, continuous casting apparatus **300** includes ultrasound transducer **360**. A coupling fluid (e.g., a gel, etc.) may be applied to a surface of cast product **340** to facilitate imaging with ultrasound transducer **360**.

[0065] As shown in the detail view of FIG. **9**, ultrasound transducer **360** is positioned to engage cast product **340** with a plurality of ultrasound waves **362**. In one embodiment, interaction of ultrasound waves **362** with cast product **340** produces a plurality of response signals **364**. In one embodiment, transducer **360** both transmits ultrasound waves **362** and receives (e.g., reflected, etc.) response signals **364**. In another embodiment, transducer **360** operates in conjunction with a second ultrasound transducer. By way of example, transducer **360** may transmit ultrasound waves **362** and the second transducer may receive response signals **364**. By way of another example, the second transducer may transmit ultrasound waves **362** and the transducer **360** may receive response signals **364**. In one embodiment, response signals **364** are different than ultrasound waves **362**. By way of example, response signals **364** may have a different amplitude, direction, frequency, or time delay than ultrasound waves **362**. Response signals **364** may have properties that vary based on the characteristics of cast product **340** at the location engaged by ultrasound waves **362** (e.g., a defective portion of cast product **340** scatters ultrasound waves **362** differently than a defect-free portion of cast product **340**, the frequency dependence of the scattering of ultrasound waves **362** may vary based on the size distribution of phase boundaries in cast product **340**, etc.). According to one embodiment, an additive is mixed within molten material **320** (e.g., prior to heating the material, after the material becomes molten, etc.). The additive may be configured to increase an ultrasonic contrast within cast product **340**. By way of example, the additive may include air bubbles, gas-filled micro bubbles, or still another agent.

[0066] Referring again to FIG. **9**, processing circuit **370** is coupled to ultrasound transducer **360**. Processing circuit **370** may be implemented as a general-purpose processor, an application specific integrated circuit (ASIC), one or more field programmable gate arrays (FPGAs), a digital-signal-processor (DSP), circuits containing one or more processing components, circuitry for supporting a microprocessor, a group of processing components, or other suitable electronic processing components. According to the embodiment shown in FIG. **9**, processing circuit **370** includes processor **372** and memory **374**. Processor **372** may include an ASIC, one or more FPGAs, a DSP, circuits containing one or more processing components, circuitry for supporting a microprocessor, a group of processing components, or other suitable electronic processing components. In some embodiments, processor **372** is configured to execute computer code stored in memory **374** to facilitate the activities described herein. Memory **374** may be any volatile or non-volatile computer-readable storage medium capable of storing data or computer code relating to the activities described herein. In one embodiment, memory **374** has computer code modules (e.g., executable code, object code, source code, script code, machine code, etc.) configured for execution by processor **372**. In some embodiments, processing circuit **370** represents a collection of processing devices (e.g., servers, data centers, etc.). In such cases, processor **372** represents the collective processors of the devices, and memory **374** represents the collective storage devices of the devices.

[0067] According to one embodiment, processing circuit **370** is configured to determine a volumetric flow property of cast product **340** during the casting process. In one embodiment, the volumetric flow property includes at least one of a speed, a direction, a voracity, and a turbulence of the material within cast product **340**. The volumetric flow property may provide information regarding a heat flow within cast product **340**. Processing circuit **370** may determine the volumetric flow property by evaluating a Doppler shift based on response signals **364**. By way of example, the Doppler shift may include the difference in frequency between ultrasound waves **362** and response signals **364**, the difference in frequency between various response signals **364**, or still another variation. In one embodiment, processing circuit **370** is configured to determine a control variable using the volumetric flow property.

[0068] According to one embodiment, processing circuit **370** is configured to determine the volumetric flow property at a point within cast product **340**. According to another embodiment, processing circuit **370** is configured to determine the volumetric flow property for at least two points along a line within cast product **340**. According to still another embodiment, processing circuit **370** is configured to determine the volumetric flow property for a plurality of points along a plane within cast product **340**. According to still another embodiment, processing circuit **370** is configured to determine the volumetric flow property on a surface of cast product **340**.

[0069] Processing circuit **370** may determine the volumetric flow property for a particular location within cast product **340**. In another embodiment, processing circuit **370** is configured to determine a cumulative volumetric flow property for cast product **340**. By way of example, processing circuit **370** may be configured to determine the cumulative volumetric flow property using a plurality of points along a surface of cast product **340**. By way of another example, processing circuit **370** may be configured to determine the cumulative volumetric flow property using a plurality of points within an interior region of cast product **340**.

[0070] In one embodiment, processing circuit **370** is configured to determine the control variable using a simulation-based control algorithm. Processing circuit **370** may be configured to generate a real-time model of cast product **340** based on response signals **364**, and processing circuit **370** may be configured to determine the control variable using a parametric control algorithm, according to various embodiments. In another embodiment, processing circuit **370** includes a filter configured to relate a condition of cast product **340** to response signals **364**. In one embodiment, the condition includes at least one of a phase, a phase distribution, a porosity, a strength, a stress characteristic, a strain characteristic, a fatigue characteristic, a creep characteristic, a vibrational mode, a vibrational frequency, a ductility, a stress-strain characteristic, and a uniformity of cast product **340**. In one embodiment, the condition includes at least one of an expense, a work input, a heating input, and a cooling input required during the casting process.

[0071] As shown in FIGS. **8-9**, continuous casting apparatus **300** includes regulation system **380**. In one embodiment, regulation system **380** is configured to modify cast product **340** during the casting process as a function of the control

variable. Regulation system **380** may include an actuator, a thermal regulation system, an electrical device, a magnetic field generator, or still another apparatus.

[0072] Referring next to the embodiment shown in FIGS. **10-11**, a casting apparatus, shown as continuous casting apparatus **400** includes a mold, shown as mold **410**, that is configured to receive molten material **420** as part of a continuous casting process. In another embodiment, the casting apparatus is a batch casting apparatus that includes a mold configured to receive molten material **420** as part of a batch casting process. As shown in FIG. **10**, molten material **420** flows from a tundish **430** into mold **410**. In one embodiment, mold **410** includes a sidewall, shown as sidewall **412**, that at least partially shapes a cast product, shown as cast product **440**. As shown in FIG. **10**, cast product **440** includes first end **442** having a vertical orientation and second end **444** having a horizontal orientation. A plurality of guides, shown as rollers **450**, facilitates the transition of cast product **440** between the vertical and horizontal orientations. According to the embodiment shown in FIG. **10**, continuous casting apparatus **400** includes probe **460**. As shown in the detail view of FIG. **11**, probe **460** is configured to engage cast product **440** with test signal **462** and provide a sensing signal relating to a property of cast product **440**.

[0073] Referring again to FIG. **11**, processing circuit **470** is coupled to probe **460**. Processing circuit **470** may be implemented as a general-purpose processor, an application specific integrated circuit (ASIC), one or more field programmable gate arrays (FPGAs), a digital-signal-processor (DSP), circuits containing one or more processing components, circuitry for supporting a microprocessor, a group of processing components, or other suitable electronic processing components. According to the embodiment shown in FIG. **11**, processing circuit **470** includes processor **472** and memory **474**. Processor **472** may include an ASIC, one or more FPGAs, a DSP, circuits containing one or more processing components, circuitry for supporting a microprocessor, a group of processing components, or other suitable electronic processing components. In some embodiments, processor **472** is configured to execute computer code stored in memory **474** to facilitate the activities described herein. Memory **474** may be any volatile or non-volatile computer-readable storage medium capable of storing data or computer code relating to the activities described herein. In one embodiment, memory **474** has computer code modules (e.g., executable code, object code, source code, script code, machine code, etc.) configured for execution by processor **472**. In some embodiments, processing circuit **470** represents a collection of processing devices (e.g., servers, data centers, etc.). In such cases, processor **472** represents the collective processors of the devices, and memory **474** represents the collective storage devices of the devices. According to one embodiment, processing circuit **470** is configured to determine a volumetric temperature profile of cast product **440** during the casting process by evaluating the plurality of sensing signals. Processing circuit **470** may be configured to determine a control variable using the volumetric temperature profile.

[0074] In one embodiment, probe **460** includes an ultrasound transducer and test signal **462** includes a plurality of ultrasound waves. By way of example, the plurality of ultrasound waves may be produced as a plurality of beams (e.g., a plurality of non-linearly coupled beams). Interaction of the ultrasound waves with cast product **440** may produce a plurality of response signals. In one embodiment, probe **460** is configured to receive the response signals. The sensing signals provided by probe **460** may be related to the response signals.

[0075] According to one embodiment, processing circuit **470** is configured to determine the volumetric temperature profile of cast product **440** based on the thermal variation of sound speed (i.e., waves may travel at a rate that varies as a function of temperature). Cast product **440** may include a plurality of constituents, and processing circuit **470** may be configured to determine the volumetric temperature profile of cast product **440** based on a plurality of measured locations for the plurality of constituents. By way of example, constituents within a higher-temperature portion of cast product **440** may flow more quickly or in a different direction than constituents within a lower-temperature portion of cast product **440**.

[0076] In another embodiment, probe **460** includes an electrical signal generator and test signal **462** includes an electrical signal. The sensing signals provided by probe **460** may be related to an amount of current that passes through cast product **440**. In one embodiment, processing circuit **470** is configured to determine the volumetric temperature profile of cast product **440** based on the thermal variation of electrical conductivity. By way of example, a higher-temperature portion of cast product **440** may have a conductivity that is greater or lesser than a lower-temperature portion of cast product **440**.

[0077] In yet another embodiment, probe **460** includes a magnetic field generator, and test signal **462** includes a magnetic field. Processing circuit **470** may be configured to determine the volumetric temperature profile of cast product **440** based on the thermal variation of permeability. By way of example, a higher-temperature portion of cast product **440** may have a permeability that is greater than a lower-temperature portion of cast product **440**. In one embodiment, processing circuit **470** controls eddy current testing that measures a decay profile for eddy currents within cast product **440**, thereby facilitating determination of the permeability and temperature for a portion of cast product **440**.

[0078] According to one embodiment, processing circuit **470** is configured to use tomography to localize a line-sensed quantity. By way of example, the line-sensed quantity may be a material density (e.g., measured by optical or x-ray transmissivity, etc.). By way of another example, the line sensed quantity may be at least one of a porosity and a size distribution of material phases (e.g., measured by optical or ultrasound scattering from a beam, etc.). In another embodiment, processing circuit **470** is configured to evaluate the characteristics of a plane within cast product **440**. In still another embodiment, processing circuit **470** is configured to evaluate the characteristics of a surface region on cast product **440**.

[0079] According to one embodiment, processing circuit **470** is configured to generate a real-time model of cast product **440** based on the sensing signal. Processing circuit **470** may be configured to determine the control variable using a simulation-based control algorithm. In another embodiment, processing circuit **470** includes a filter configured to relate a condition of cast product **440** to the sensing signal. By way of example, the condition of the cast product may include a phase, a phase distribution, a porosity, a strength, a stress characteristic, a strain characteristic, a fatigue characteristic, a creep characteristic, a vibrational mode, a vibrational frequency, a ductility, a stress-strain characteristic, and a uniformity of the cast product. By way of another example, the

condition of the cast product may include an expense, a work input, a heating input, and a cooling input required during the casting process. Processing circuit **470** may be configured to determine the control variable using a filter-based control algorithm. In still another embodiment, processing circuit **470** is configured to determine the control variable using computer simulation (e.g., a parametric control algorithm, etc.).

[0080] As shown in FIGS. **10-11**, continuous casting apparatus **400** includes regulation system **480**. In one embodiment, regulation system **480** is configured to modify cast product **440** during the casting process as a function of the control variable. Regulation system **480** may include an actuator, a thermal regulation system, an electrical device, a magnetic field generator, or still another apparatus.

[0081] Referring next to FIG. **12**, method **500** for actively controlling a casting process includes monitoring a property of a cast product during the casting process with a sensor (**510**), providing a corresponding sensing signal with the sensor (**520**), generating a real-time model of the cast product based on the corresponding sensing signal (**530**), and determining a control variable using the real-time model of the cast product (**540**). In one embodiment the control variable relates to a real-time modification of the cast product.

[0082] Referring next to FIG. **13**, method **600** for actively controlling a casting process includes providing a mold configured to at least partially shape a cast product as part of a casting process (**610**), monitoring a property of the cast product during the casting process with a sensor (**620**), providing a corresponding sensing signal with the sensor (**630**), generating a real-time model of the cast product based on the corresponding sensing signal (**640**), determining a control variable using the real-time model of the cast product (**650**), and modifying the cast product during the casting process as a function of the control variable (**660**).

[0083] It is important to note that the construction and arrangement of the elements of the systems and methods as shown in the embodiments are illustrative only. Although only a few embodiments of the present disclosure have been described in detail, those skilled in the art who review this disclosure will readily appreciate that many modifications are possible (e.g., variations in sizes, dimensions, structures, shapes and proportions of the various elements, values of parameters, mounting arrangements, use of materials, colors, orientations, etc.) without materially departing from the novel teachings and advantages of the subject matter recited. For example, elements shown as integrally formed may be constructed of multiple parts or elements. It should be noted that the elements and/or assemblies of the enclosure may be constructed from any of a wide variety of materials that provide sufficient strength or durability, in any of a wide variety of colors, textures, and combinations. The order or sequence of any process or method steps may be varied or re-sequenced, according to alternative embodiments. Other substitutions, modifications, changes, and omissions may be made in the design, operating conditions, and arrangement of the preferred and other embodiments without departing from scope of the present disclosure or from the spirit of the appended claims.

[0084] The present disclosure contemplates methods, systems, and program products on any machine-readable media for accomplishing various operations. The embodiments of the present disclosure may be implemented using existing computer processors, or by a special purpose computer processor for an appropriate system, incorporated for this or another purpose, or by a hardwired system. Embodiments within the scope of the present disclosure include program products comprising machine-readable media for carrying or having machine-executable instructions or data structures stored thereon. Such machine-readable media can be any available media that can be accessed by a general purpose or special purpose computer or other machine with a processor. By way of example, such machine-readable media can comprise RAM, ROM, EPROM, EEPROM, CD-ROM or other optical disk storage, magnetic disk storage or other magnetic storage devices, or any other medium which can be used to carry or store desired program code in the form of machine-executable instructions or data structures and which can be accessed by a general purpose or special purpose computer or other machine with a processor. When information is transferred or provided over a network or another communications connection (either hardwired, wireless, or a combination of hardwired or wireless) to a machine, the machine properly views the connection as a machine-readable medium. Thus, any such connection is properly termed a machine-readable medium. Combinations of the above are also included within the scope of machine-readable media. Machine-executable instructions include, for example, instructions and data, which cause a general-purpose computer, special purpose computer, or special purpose processing machines to perform a certain function or group of functions.

[0085] Although the figures may show a specific order of method steps, the order of the steps may differ from what is depicted. Also two or more steps may be performed concurrently or with partial concurrence. Such variation will depend on the software and hardware systems chosen and on designer choice. All such variations are within the scope of the disclosure. Likewise, software implementations could be accomplished with standard programming techniques with rule-based logic and other logic to accomplish the various connection steps, processing steps, comparison steps, and decision steps.

1. A control system for a casting process, comprising:
- a sensor positioned to monitor a property of a cast product during the casting process and provide a corresponding sensing signal; and
- a processing circuit configured to:
  - generate a real-time model of the cast product based on the corresponding sensing signal; and
  - determine a control variable using the real-time model of the cast product, wherein the control variable relates to a real-time modification of the cast product.

2-22. (canceled)

23. The system of claim **1**, wherein the property of the cast product includes at least one of a temperature, a flow, a stress, a strain, a viscosity, a porosity, a phase boundary, a conductivity, a current, and a magnetic field of the cast product.

24. The system of claim **1**, wherein the control variable relates to at least one of an applied surface heating, an applied surface cooling, an applied volumetric heating, an applied surface force, an applied volumetric force, an applied surface displacement, an applied current, an applied magnetic field, and an applied voltage.

25. The system of claim **1**, wherein the processing circuit is configured to determine the control variable by optimizing a casting function relating to a condition of the cast product.

26. The system of claim **25**, wherein the condition of the cast product includes at least one of a phase, a phase distri-

bution, a porosity, a strength, a stress characteristic, a strain characteristic, a fatigue characteristic, a creep characteristic, a vibrational mode, a vibrational frequency, a ductility, a stress-strain characteristic, and a uniformity of the cast product.

27. The system of claim **25**, wherein the condition of the cast product includes at least one of an expense, a work input, a heating input, and a cooling input required during the casting process.

28. The system of claim **25**, wherein the processing circuit is configured to optimize the casting function while satisfying a constraint function.

29. The system of claim **28**, wherein the constraint function includes a threshold value for the control variable.

30. The system of claim **28**, wherein the constraint function includes at least one of a time, a material usage, an expense, a work input, a heating input, and a cooling input associated with the casting process.

31. The system of claim **25**, wherein the processing circuit is configured to optimize the casting function by evaluating the effect on the casting function of a first control strategy and a second control strategy in real-time.

32. The system of claim **31**, wherein the processing circuit is configured to evaluate the first control strategy and the second control strategy in parallel.

33. The system of claim **31**, wherein the processing circuit is configured to determine the first control strategy based on differentiation of the casting function with respect to a first control variable, and wherein the processing circuit is configured to determine the second control strategy based on differentiation of the casting function with respect to a second control variable.

34. The system of claim **31**, wherein the processing circuit is configured to determine the first control strategy using a filter relating a first control variable to the corresponding sensing signal, and wherein the processing circuit is configured to determine the second control strategy using the filter relating a second control variable to the corresponding sensing signal.

35-50. (canceled)

51. A casting apparatus, comprising:

a mold configured to receive molten material as part of a casting process, wherein the mold includes a sidewall that at least partially shapes a cast product;

a sensor positioned to monitor a property of the cast product during the casting process and provide a corresponding sensing signal;

a processing circuit configured to:

generate a real-time model of the cast product based on the corresponding sensing signal; and

determine a control variable using the real-time model of the cast product; and

a regulation system configured to modify the cast product during the casting process as a function of the control variable.

52-67. (canceled)

68. The apparatus of claim **51**, wherein the regulation system includes an actuator coupled to the processing circuit and configured to apply a force to the cast product during the casting process, wherein the force varies based on the control variable.

69. The apparatus of claim **68**, wherein the force includes at least one of a surface force and a volumetric force.

70. The apparatus of claim **68**, wherein at least one of a magnitude, a location, and a direction of the force varies based on the control variable.

71. The apparatus of claim **51**, wherein the regulation system includes a thermal regulation system coupled to the processing circuit and configured to vary the temperature of the cast product during the casting process.

72. The apparatus of claim **71**, wherein the thermal regulation system includes a heater configured to provide at least one of surface heating and volumetric heating to the cast product.

73. The apparatus of claim **71**, wherein the thermal regulation system includes an electrical device configured to resistively heat at least one of a surface and a volume of the cast product.

74. The apparatus of claim **71**, wherein the thermal regulation system is configured to reduce the temperature of the cast product.

75. The apparatus of claim **74**, wherein the thermal regulation system includes a spray nozzle configured to apply a coolant fluid to an outer surface of the cast product.

76. The apparatus of claim **74**, wherein the thermal regulation system includes a conduit configured to transport a coolant fluid in thermal contact an outer surface of the cast product.

77. The apparatus of claim **51**, wherein the regulation system includes an electrical device coupled to the processing circuit and positioned to engage the cast product with an electrical signal.

78. The apparatus of claim **77**, wherein the electrical device is configured to apply at least one of a current, an electric field, and a voltage to the cast product.

79. The apparatus of claim **51**, wherein the regulation system includes a magnetic field generator coupled to the processing circuit and positioned to apply a magnetic field to the cast product, wherein the magnetic field varies based on the control variable.

80-97. (canceled)

98. A casting apparatus, comprising:

a mold configured to receive molten material as part of a casting process, wherein the mold includes a sidewall that at least partially shapes a cast product;

a first probe configured to engage the cast product with a test signal and provide a sensing signal relating to a property of the cast product;

a processing circuit configured to:

determine a volumetric temperature profile of the cast product during the casting process based on the sensing signal; and

determine a control variable using the volumetric temperature profile; and

a regulation system configured to modify the cast product during the casting process as a function of the control variable.

99. The apparatus of claim **98**, wherein the first probe includes an ultrasound transducer and the test signal includes a plurality of ultrasound waves, wherein interaction of the plurality of ultrasound waves with the cast product produces a plurality of response signals, and wherein the sensing signal is related to the plurality of response signals.

100. The apparatus of claim **99**, wherein the first probe is configured to engage the cast product with the test signal by at least one of transmitting the plurality of ultrasound waves and receiving the plurality of response signals.

101-109. (canceled)

110. The apparatus of claim **98**, wherein the first probe includes at least one of an electrical signal generator and an electrical signal receiver and the test signal includes an electrical signal, wherein the sensing signal is related to an amount of current that passes through the cast product.

111. The apparatus of claim **110**, wherein the processing circuit is configured to determine the volumetric temperature profile of the cast product based on the thermal variation of electrical conductivity.

112. The apparatus of claim **98**, wherein the first probe includes at least one of a magnetic field generator and a magnetic field sensor and the test signal includes a magnetic field.

113. The apparatus of claim **112**, wherein the processing circuit is configured to determine the volumetric temperature profile of the cast product based on the thermal variation of permeability.

114-116. (canceled)

117. The apparatus of claim **98**, wherein the processing circuit is configured to generate a real-time model of the cast product based on the sensing signal, and wherein the processing circuit is configured to determine the control variable using a simulation-based control algorithm.

118. The apparatus of claim **98**, wherein the processing circuit is configured to determine the control variable using a parametric control algorithm.

119-239. (canceled)

* * * * *