M. G. BUNNELL.

DRAG LINE BUCKET EXCAVATOR.

APPLICATION FILED MAR. 18, 1909.

1,183,948.

Patented May 23, 1916.

2 SHEETS—SHEET 1.

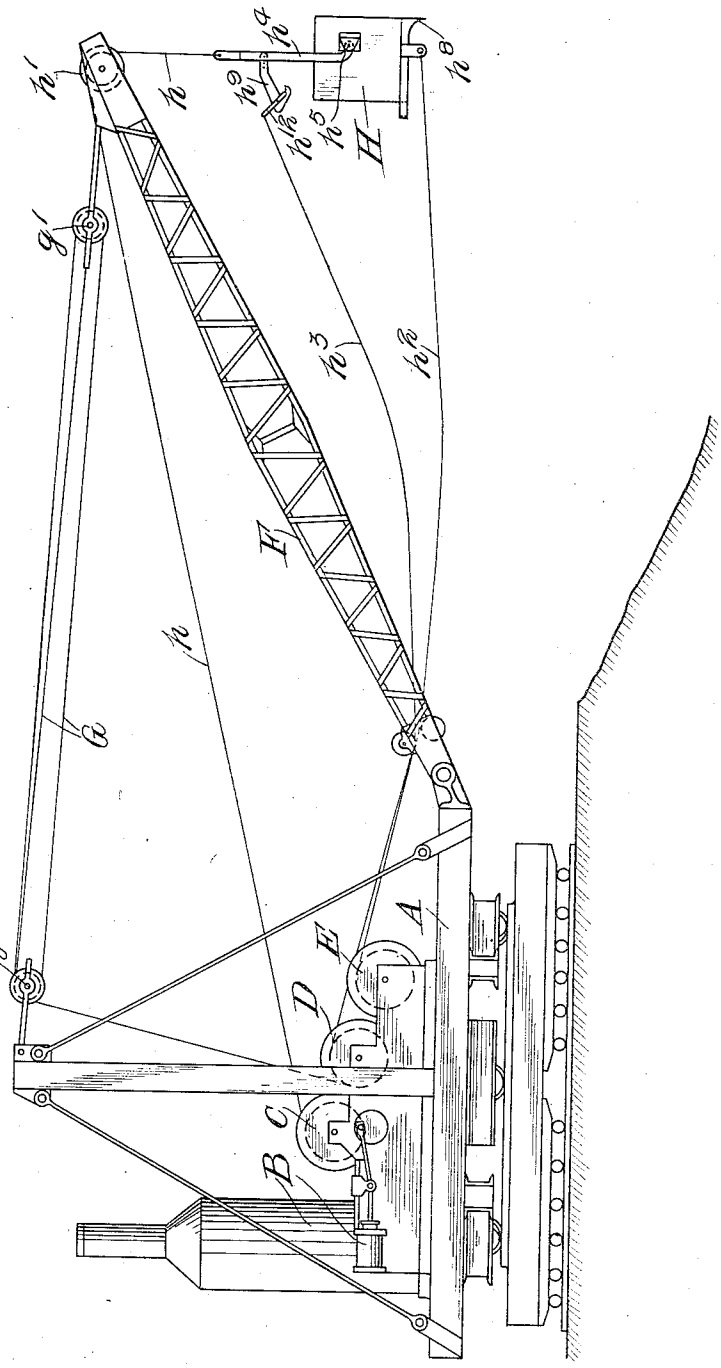

FIG. 1.

WITNESSES

A. Andersen.

C. E. Taylor

INVENTOR:

Morton G. Bunnell

By Bulkley Duncan & Drury

ATTORNEYS,

M. G. BUNNELL.

DRAG LINE BUCKET EXCAVATOR.

APPLICATION FILED MAR. 18, 1909.

1,183,948.

Patented May 23, 1916.

2 SHEETS—SHEET 2.

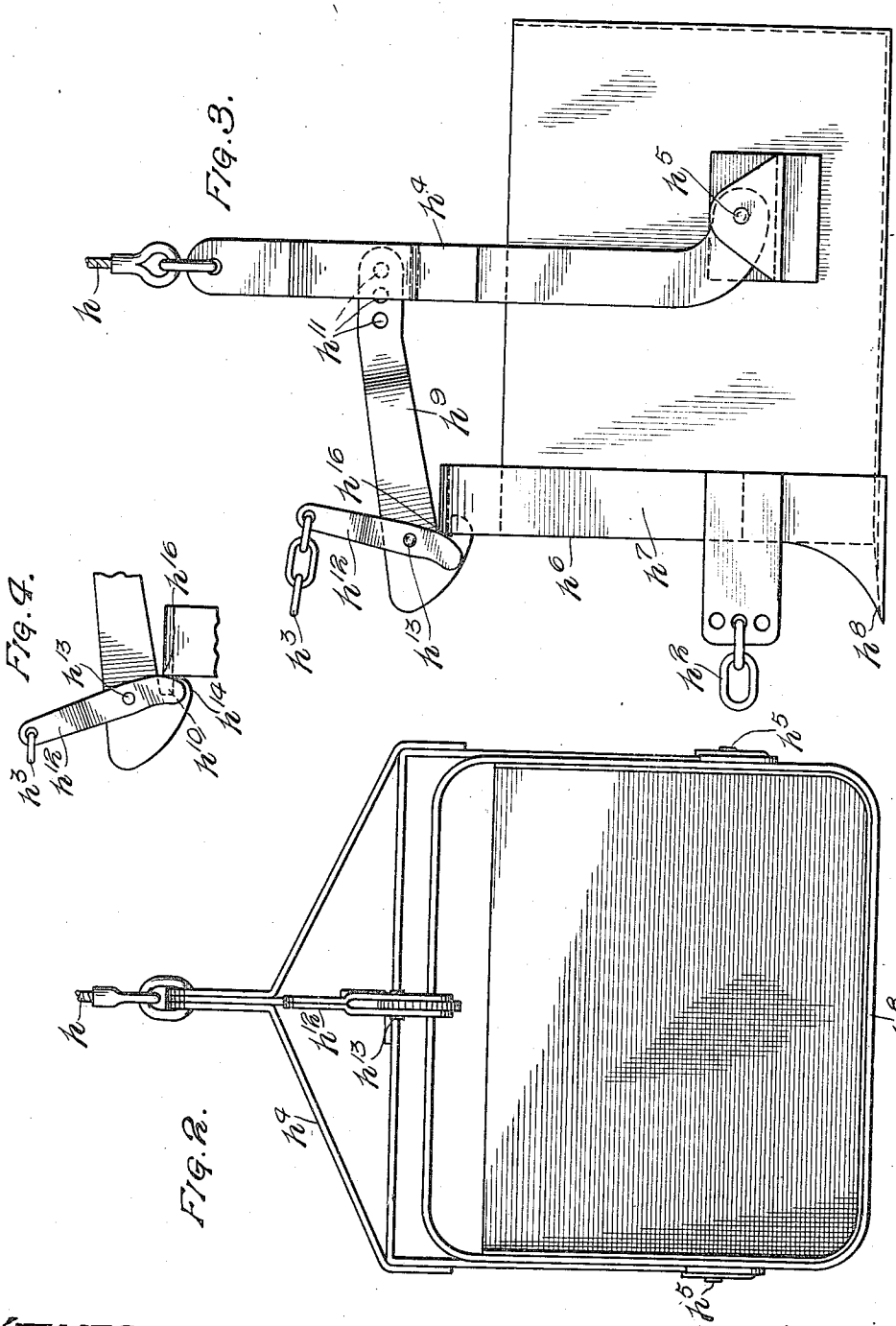

WITNESSES

A. Andersen.

C. E. Taylor.

INVENTOR:

Morton G. Bunnell

By Bulkley Durand & Drury

ATTORNEYS,

UNITED STATES PATENT OFFICE.

MORTON G. BUNNELL, OF CHICAGO, ILLINOIS, ASSIGNOR TO FREDERICK C. AUSTIN, OF CHICAGO, ILLINOIS.

DRAG-LINE BUCKET EXCAVATOR.

1,183,948. Specification of Letters Patent. Patented May 23, 1916.

Application filed March 18, 1909. Serial No. 484,291.

To all whom it may concern:

Be it known that I, MORTON G. BUNNELL, a citizen of the United States of America, and resident of Chicago, Cook county, Illinois, have invented a certain new and useful Improvement in Drag-Line Bucket Excavators, of which the following is a specification.

My invention relates to excavators of the kind commonly known as drag line bucket excavators. In excavators of this general type the bucket is pulled along the surface of the ground by the drag line. When filled, the bucket is raised by a hoist line and brought to a position suitable for dumping. Various arrrangements have been used for causing the bucket to discharge its load when it reaches the place for so doing.

The object of my invention is to provide an improved and highly efficient excavator of the foregoing general character, in which novel and improved means are provided for releasing the bucket and thereby causing it to discharge its load, by tilting or turning over, or by turning far enough around to freely discharge the contents from the mouth thereof.

It is also an object to provide certain details of construction tending to increase the efficiency and certainty of operation of a drag-line bucket arrangement of this particular character.

In the accompanying drawings—Figure 1 is a side elevation of an excavator equipped with a bucket embodying the principles of my invention. Fig. 2 is an enlarged front elevation of the said bucket. Fig. 3 is a side elevation of the bucket shown in Fig. 2. Fig. 4 is a detail view of the tripping or releasing mechanism in the act of releasing the bucket.

As thus illustrated, the revolving or rotary body or platform A may be of any suitable construction. Preferably, however, the engine and boiler B are mounted thereon, together with the drums or windlasses C, D and E. These are operated by the engine, and controlled in any suitable manner.

A boom F is pivoted to one side of the body or revolving platform A, and arranged to swing up and down. A cable G, operated by the drum D, and traveling over the sheaves g and g', is employed for raising and lowering the said boom.

The bucket H is carried on the end of the hoist line h which runs over a sheave h' on the end of the boom and is operated by the drum C. The drag line h^2 is attached to the front of the bucket and brought back to the drum E. A dumping line h^3 is brought back to the drum D—that is, one of the sections thereof. In this way the cables or lines h^3 and G are operated independently.

Referring to Figs. 2 to 4, it will be seen that the hoist line h is attached to the upper end of a bail h^4 that embraces the bucket, and which has its lower ends curved rearward and pivoted to the sides of the bucket at h^5. In this way the axis of the bucket is so located that it does not balance, but tends always to turn over—that is, with its mouth h^6 downward. The open mouth of the bucket is formed or surrounded by a rectangular frame h^7 that has a lip or cutting edge h^8 at the bottom thereof. A hook h^9 is pivoted on the bail and provided with a notch h^{10} adapted to engage the front edge of the upper horizontal portion of the frame h^7. By means of a series of holes h^{11} in the rear end of the hook the position of the bucket can be varied for different kinds of soil. For sand or light soils the bucket must tilt upward at the front to hold the same. When working in clay or other heavy and sticky soil the bucket can remain horizontal, as shown, without allowing the contents to fall out. A trigger h^{12} is pivoted to the hook at h^{13} and adapted to act as a lever by engaging the outside edge of the frame h^7 with its lower end. For this purpose the trigger h^{12} has a rounded lower end portion, as shown, which serves as a cam for crowding the top of the frame h^7 out of the hook. The tripping or dumping line h^3 is attached to the upper end of this lever h^{12}. Thus a pull on said line h^3 causes the lever or trigger h^{12} to force the edge of the frame h^7 out of the notch h^{10}. When this is done, the bucket upsets and revolves or turns around to the position shown in Fig. 1. In this position the mouth of the bucket is downward and the load is discharged therefrom. When the bucket is lowered to the ground, a pull on the drag line h^2 restores it to loading position, and the load h^4 falls forward as the axis h^5 is in rear of the vertical plane of the line h, and the hook h^9 is thus returned to locking engagement with the bucket. It will be seen

that the hook h^9 cannot be forced out of engagement with the frame h^7 by the soil or large masses of earth that may pass forward into the bucket and which may engage the underside of the forward end of said hook. In this way the filling of the bucket does not tend to lift the hook out of engagement with the bucket, and consequently there is no danger of a premature release and upsetting of the bucket. This is because the nose of the hook has a lip h^{14} that extends considerably under the forward upper edge h^{15} of the bucket. With this provision, the hook cannot be pulled upward and out of engagement with the bucket. The bucket must be moved toward the bail to disengage the hook therefrom. Hence, as stated, the load cannot force the hook out of engagement with the bucket.

With the foregoing construction and mode of operation, it will be seen that the catch h^9 disengages or releases the bucket without binding, the separation of the catch from the engaging means on the bucket being perfectly free and direct in character. This, it will be seen, is necessary, because with the lip h^4 extending under the engaging portion on the bucket, in the manner explained, the catch h^9 cannot be disengaged by simply pulling it upward, but must be disengaged by tilting the mouth of the bucket upward toward the bail h^4 before any attempt is made to raise the catch. In fact, and with this arrangement, the catch does not rise to release the bucket. Also, and by means of the location of the disengaging means on the catch, the position of the latter can be changed to vary the angle of the bucket.

What I claim as my invention is:

1. An excavator comprising a tilting bucket, a hoist line therefor, instrumentalities for supporting and operating said line up and down, a member for connecting the hoist line with the bucket, upon which the bucket is supported to tilt about a horizontal axis, a catch for holding the bucket in carrying position, pivoted on the said member, means on the bucket for engaging said catch, exerting a pull on the catch when the bucket is suspended in carrying position, whereby the catch is positively held against being forced upward, and mechanism whereby the catch freely releases the bucket, including an element pivoted on said catch, serving to tilt the bucket backward and thereby to release the catch.

2. An excavator comprising a tilting bucket, a hoist line therefor, instrumentalities for supporting and operating said line up and down, a member for connecting the hoist line with the bucket, upon which the bucket is supported to tilt about a horizontal axis, a catch for holding the bucket in carrying position, pivoted on the said member, means on the bucket for engaging said catch, exerting a pull on the catch when the bucket is suspended in carrying position, whereby the catch is positively held against being forced upward, and mechanism whereby the catch freely releases the bucket, including an element pivoted on said catch, serving to tilt the bucket backward and thereby release the catch, said element consisting of a forked lever which engages said means at each side of said catch, and a connection engaging said element to force said means out of locking engagement with said catch.

3. An excavator comprising a tilting bucket, a hoist line therefor, instrumentalities for supporting and operating said line up and down, a member for connecting the hoist line with the bucket, upon which the bucket is supported to tilt about a horizontal axis, a catch for holding the bucket in carrying position, pivoted on the said member, means on the bucket for engaging said catch, exerting a pull on the catch when the bucket is suspended in carrying position, whereby the catch is positively held against being forced upward, and mechanism whereby the catch freely releases the bucket, including an element pivoted on said catch, serving to tilt the bucket backward and thereby release the catch, said catch having means of adjustment for changing the position thereof to vary the carrying angle of said bucket.

4. An excavator comprising a tilting bucket, a hoist line therefor, instrumentalities for supporting and operating said line up and down, a member for connecting the hoist line with the bucket, upon which the bucket is supported to tilt about a horizontal axis, a catch for holding the bucket in carrying position, pivoted on the said member, means on the bucket for engaging said catch, exerting a pull on the catch when the bucket is suspended in carrying position, whereby the catch is positively held against being forced upward, and mechanism whereby the catch freely releases the bucket, including an element pivoted on said catch, serving to tilt the bucket backward and thereby release the catch, said catch having a notch, and said means having an edge for engaging in said notch, said element engaging said edge to force the same backward and out of said notch, and a line secured to the upper end of said element.

5. An excavator comprising a tilting bucket, a hoist line therefor, instrumentalities for supporting and operating said line up and down, a member for connecting the hoist line with the bucket, upon which the bucket is supported to tilt about a horizontal axis, a catch for holding the bucket in carrying position, pivoted on the said member, means on the bucket for engaging said catch, exerting a pull on the catch

when the bucket is suspended in carrying position, whereby the catch is positively held against being forced upward, and mechanism whereby the catch freely releases the bucket, including an element pivoted on said catch, serving to tilt the bucket backward and thereby release the catch, said bucket having an open mouth directly below said element, when the catch engages said means, a drag line connected to said mouth, and a pulling connection to said element.

6. An excavator comprising a tilting bucket, a hoist line therefor, instrumentalities for supporting and operating said line up and down, a member for connecting the hoist line with the bucket, upon which the bucket is supported to tilt about a horizontal axis, a catch for holding the bucket in carrying position, pivoted on the said member, means on the bucket for engaging said catch, exerting a pull on the catch when the bucket is suspended in carrying position, whereby the catch is positively held against being forced upward, and mechanism whereby the catch freely releases the bucket, including an element pivoted on said catch, serving to tilt the bucket backward and thereby to release the catch, said catch having a lip extending under said means, preventing the catch from being forced upward out of engagement therewith, and said element serving to force said means backward on the upper edge of said lip to disengage the catch, and means for operating said element to cause said tilting of the bucket relative to said member.

Signed by me at Chicago, Illinois, this 3rd day of March, 1909.

MORTON G. BUNNELL.

Witnesses:

CLARENCE E. TAYLOR,

E. H. CLEGG.