June 10, 1930. F. J. GETZ 1,762,975

DISH DISPENSER

Filed Nov. 2, 1928 2 Sheets-Sheet 1

Fig. 1

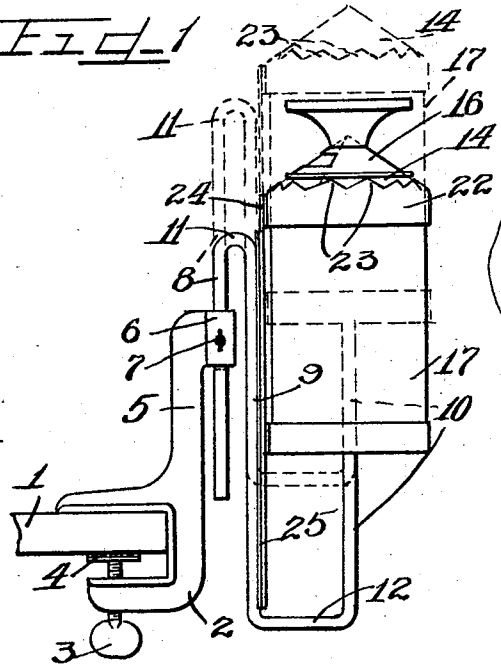

Fig. 2

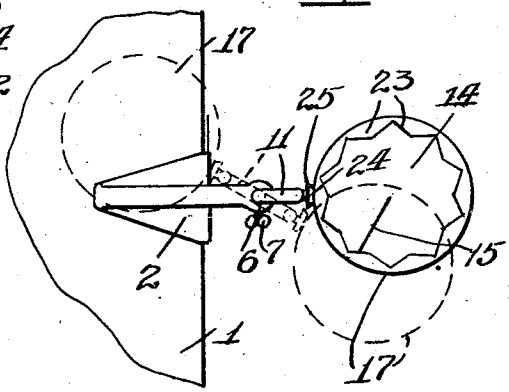

Fig. 6

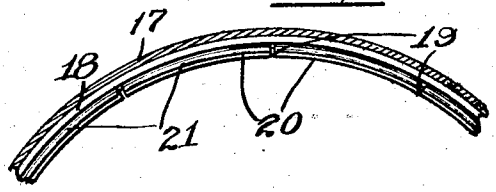

Fig. 3

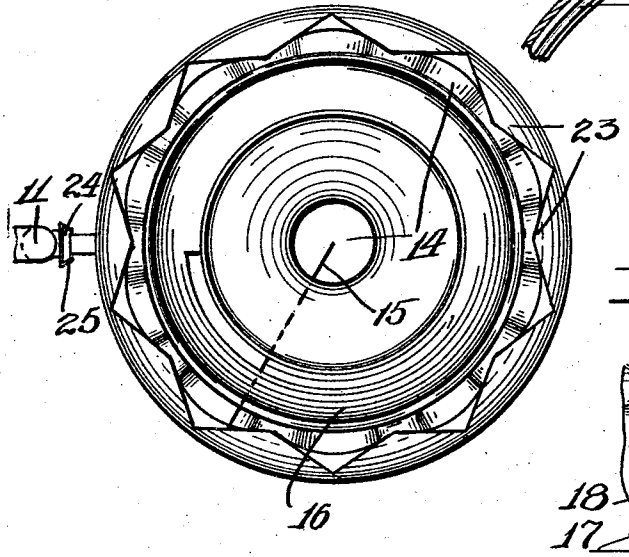

Fig. 7

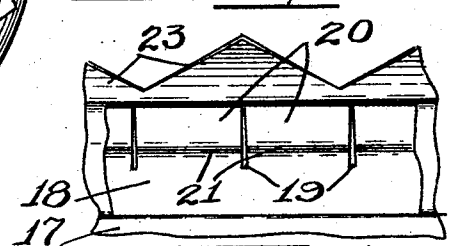

Inventor

Frank J. Getz.

by Charles Fillin Attys

June 10, 1930. F. J. GETZ 1,762,975

DISH DISPENSER

Filed Nov. 2, 1928 2 Sheets-Sheet 2

Fig. 4

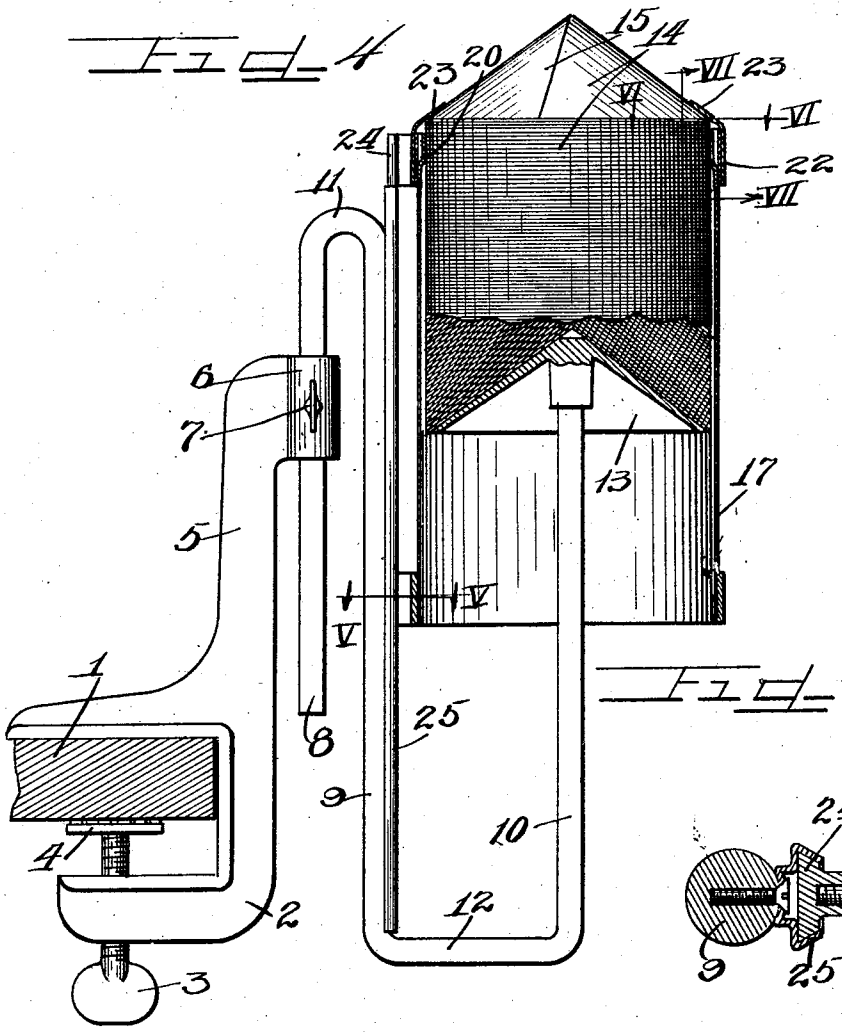

Fig. 5

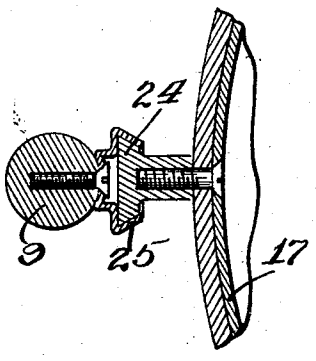

Inventor

Frank J. Getz.

Charles W. Fell

By Attys.

Patented June 10, 1930 1,762,975

UNITED STATES PATENT OFFICE

FRANK J. GETZ, OF CHICAGO, ILLINOIS, ASSIGNOR, BY MESNE ASSIGNMENTS, TO VORTEX CUP COMPANY, OF CHICAGO, ILLINOIS, A CORPORATION OF DELAWARE

DISH DISPENSER

Application filed November 2, 1928. Serial No. 316,666.

This invention relates to an improved dispenser, and more particularly to a dispenser for conical sundae dishes or the like, adapted to carry a stack of sundae dishes in an inverted position with the uppermost dish projecting upwardly through the open top of a gravity feed magazine or container which fits over the conical support for the dishes and furthermore has sliding engagement with an adjustable bracket, supported in a clamping bracket which may be removably engaged on the edge of a counter, table or the like.

It is an object of this invention to provide an improved sundae dish dispenser wherein a dish-holding magazine is engaged over a dish support and has sliding engagement with a bracket on which the dish-supporting member is also engaged.

It is also an object of this invention to provide a sundae dish dispenser wherein an adjustable bracket is provided with a support for a stack of inverted sundae dishes and also affords a means for guiding a magazine or container for the sundae dishes downwardly over the stack of inverted dishes so that each time a dish is removed from the top of the stack, the magazine is permitted to drop by gravity a predetermined amount.

It is a further object of this invention to provide a dish dispenser wherein a magazine for enclosing a stack of inverted dishes is adapted to move downwardly by gravity on a supporting bracket each time a dish is withdrawn from the upper end of the magazine.

It is furthermore an object of this invention to provide a dispenser wherein a gravity feed magazine for dishes is slidably engaged upon a bracket which may be adjusted with respect to a clamp supporting device to permit the magazine and bracket to be rotated into different positions of adjustment or be swung over a table on which the clamping device is engaged.

Still another object of this invention is to provide a dish dispenser wherein a gravity feed magazine for covering a stack of dishes is slidably engaged on a supporting bracket and has the upper end thereof provided with a spring guide ring for guiding the stack of dishes upwardly against tapered retaining members between which the uppermost dish in the stack is adapted to be withdrawn from the dispenser.

It is furthermore an object of this invention to provide a dish dispenser wherein a stack of inverted dishes is engaged upon a support within a gravity feed housing or container to permit the dishes to be withdrawn from the upper end of the housing to permit the dishes to be withdrawn one at a time between tapered restricting members thereby permiting the housing to move downwardly by gravity a predetermined amount over the stack of stationary sundae dishes.

Other and further important objects of this invention will be apparent from the disclosures in the specification and the accompanying drawings.

The invention (in a preferred form) is illustrated in the drawings and hereinafter more fully described.

On the drawings:

Figure 1 is a side elevation of an improved dish dispenser and its mounting bracket, illustrating an elevated position of the dispenser in dotted lines.

Figure 2 is a top plan view of the dish dispenser illustrating in dotted lines various positions into which the dispenser may be moved with respect to the clamping bracket and the table which supports the same.

Figure 3 is an enlarged top plan view of the dish holding magazine with a dish holder mounted in inverted position upon the stack of dishes.

Figure 4 is an enlarged vertical section through the dish magazine with the supporting brackets shown in elevation and with a portion of the stack of dishes broken away.

Figure 5 is an enlarged fragmentary transverse detail section taken on line V—V of Figure 4.

Figure 6 is an enlarged fragmentary section of the upper portion of the dish magazine taken on line VI—VI of Figure 4.

Figure 7 is an enlarged vertical view of a portion of the upper end of the dish-holding magazine taken on line VII—VII of Figure 4.

As shown on the drawings:

The reference numeral 1 indicates a portion of a table or counter having engaged over one edge thereof a clamping bracket 2 provided with a clamping screw 3, having a rotatable clamping head 4 engaged on the inner end thereof adapted to be seated against the bottom surface of the table 1 as clearly illustrated in Figures 1 and 4. The clamping bracket 2 is provided with an upright arm 5, the upper end of which is deflected outwardly and has integrally formed thereon a sleeve 6, carrying a set screw 7.

Adjustably supported in the sleeve 6 of the clamping bracket is an auxiliary or magazine supporting bracket comprising a Z-shaped device consisting of three parallel arms 8, 9, and 10, with the arms 8 and 9 positioned closer together than the arms 9 and 10, and connected at their upper ends by means of a bight portion 11. The lower ends of the two parallel arms 9 and 10 are connected by means of a bight portion 12. The arm 8 of the auxiliary bracket projects downwardly through the sleeve 6 of the clamping bracket and is adapted to be held in a set position of adjustment by means of the set screw 7.

Mounted upon the upper end of the auxiliary bracket arm 10 is a conical dish support 13 having the apex thereof pointing upwardly to permit a stack of nested sundae dishes to be supported thereon in inverted position. The sundae dishes 14 are of conical shape and are provided with a folded portion 15 on the exterior thereof adapted to permit an inwardly deflected tongue of a metal sundae dish holder 16 to be moved into gripping contact with the folded portion of the uppermost sundae dish 14 in the stack to facilitate removal of the dishes one at a time from the upper end of the stack.

Slidably engaged over the stack of sundae dishes 14 is a cylindrical dish-holding magazine or container 17 open at its lower end to permit the same to be engaged over the conical sundae dish holder 13. Secured within the upper open end of the magazine or container 17 against the upper margin of the inner surface thereof is a metal ring 18 having the upper margin thereof provided with a plurality of equidistantly spaced slots 19 dividing said upper margin into a plurality of resilient guide teeth or projections 20 which are slightly deflected inwardly at 21 to provide a guide ring of a diameter slightly greater than the diameter of the stack of dishes. The guide ring 18 is positioned so that the deflected teeth 20 thereof afford a slit guide ring whereby the upper end of the stack of sundae dishes within the magazine 17 are adapted to be properly guided upwardly through the upper end of the magazine into a position to facilitate dispensing of the sundae dishes.

Engaged upon the upper open end of the sundae dish magazine 17 is a band or ring 22, the upper margin of which is formed to afford a plurality of tapered projections or retaining teeth 23 which are curved or deflected inwardly and upwardly to afford a ring of tapered resilient projections adapted to rest upon the exterior of the uppermost sundae dish in the stack. It will thus be noted that the magazine 17 is engaged over the stack of sundae dishes and is supported upon the upper end of the stack by means of the tapered teeth or projections 23, thereby permitting the magazine 17 to drop by gravity a predetermined amount each time a sundae dish is removed through the upper end of the magazine 17 by means of a sundae dish holder 16 or by an operator's hand as desired.

Rigidly secured by means of screws, brazing or other suitable means longitudinally upon the exterior of the sundae dish magazine 17 is a dovetailed guide bar or rail 24 which is adapted to slidably interfit in a dovetailed guide channel 25 rigidly secured longitudinally upon one side of the arm 9 of the auxiliary bracket.

The operation is as follows:

The clamping bracket 2 is adapted to be engaged upon the edge of a counter or table 1, as illustrated in Figure 1, and is rigidly secured in place by means of the clamping bolt or screw 3. The arm 8 of the auxiliary bracket is engaged in the sleeve 6 of the clamping bracket and is adapted when the set screw 7 is loosened, to be rotated through approximately 180° to permit the dish magazine to be located in different positions convenient for an operator. When it is desired to move the dish magazine into a position over the top of the counter or table 1, the set screw 7 is loosened and the auxiliary bracket is raised into a position corresponding to that illustrated in dotted lines in Figure 1, thereby permitting the dish magazine to be moved into a position over the top of the counter or table 1 as illustrated in Figure 2. When the dish dispenser is properly located, the set screw 7 may be tightened to hold the same in its set position of adjustment.

A set of nested sundae dishes 14 is adapted to be seated in inverted position upon the conical sundae dish support 13 after which a magazine 17 is slidably engaged over the stack of sundae dishes, with the guide bar 24 slidably engaged in the guide channel 25 of the auxiliary bracket to properly guide the dish magazine downwardly over the stack of sundae dishes each time a sundae dish is removed through the upper end of the magazine.

The uppermost sundae dish in the stack projects through the upper end of the magazine between the retaining teeth 23 to per-

mit a sundae dish holder 16 to be engaged upon the exterior of the uppermost dish in an inverted position as illustrated in Figure 1, after which the sundae dish is slightly rotated with respect to the dish, permitting an inwardly deflected finger, forming a part of the holder 16, to be engaged beneath the folded portion 15 of the sundae dish so that the uppermost dish may be withdrawn through the upper end of the sundae dish and between the retaining teeth 23 which act to slightly deflect or escallop the margin of the sundae dish which is being retracted.

When a sundae dish is withdrawn through the upper restricted end of the magazine 17 by means of the sundae dish holder 16 or by the hand of an operator, the weight of the magazine 17 causes the same to move downwardly by gravity a predetermined amount over the stack of sundae dishes so that the supporting teeth 23 will rest upon the next sundae dish in the stack. When the last sundae dish is removed from the magazine 17, the conical dish support 13 projects through the upper end of the magazine 17 thereby notifying an attendant that the dish dispenser is ready to be refilled with another stack of sundae dishes. The magazine 17 is then slidably removed upwardly from over the conical dish support 13 to permit a new stack of sundae dishes to be either engaged within the magazine 17 or placed upon the top of the conical support 13 as desired.

The toothed ring 18 within the upper end of the dish magazine 17 affords a restricted passage for the stack of dishes and properly guides the dishes at the upper end of the stack through the upper toothed end of the magazine. The resilient deflected teeth 23 on the upper end of the magazine act not only as a support for the magazine, but also afford an arrangement whereby the dispensing of the sundae dishes, one at a time, is assured.

It will of course be understood that when desired the auxiliary bracket on which the sundae dish supporting magazine is engaged may be mounted on a wall bracket or other support if need be.

It is apparent that numerous details of construction may be varied through a wide range without departing from the principles of this invention and it is therefore not purposed to limit the patent granted hereon otherwise than necessitated by the scope of the appended claims.

I claim as my invention:

1. A dish dispenser comprising a supporting bracket, a dish support mounted thereon adapted to support a stack of nested sundae dishes in an inverted position and a magazine for enclosing the stack of dishes, said magazine having the exterior thereof slidably engaged with said bracket and adapted to drop by gravity a predetermined distance each time a dish is removed from the upper end of the magazine.

2. A dish dispenser comprising a bracket, conical means thereon for supporting a stack of conical sundae dishes in an inverted position, a guide member rigidly secured on said bracket, a gravity moving magazine engaged over the stack of dishes, and means on said magazine having sliding engagement with the guide member on said bracket.

3. A dish dispenser comprising a bracket, a magazine, slidably interfitting members rigidly mounted on said bracket and on said magazine, and a dish support on said bracket engaged within said magazine.

4. A dish dispenser comprising a clamping bracket, an auxiliary bracket adjustably engaged thereon, a dish enclosing magazine slidably engaged with said auxiliary bracket, and a dish support rigidly secured on said auxiliary bracket and disposed within said magazine to permit said magazine to move downwardly by gravity over the dish support each time a dish is removed from the magazine.

5. A dish support comprising a clamping bracket, an auxiliary bracket adjustably engaged thereon, a dish support secured on said auxiliary bracket, adapted to support a stack of nested dishes in an inverted position, a guide channel secured on said auxiliary bracket, a guide bar secured on said magazine adapted to slidably interfit said guide channel to guide the magazine downwardly over the dish support, and restricting members formed on the upper end of the magazine to insure dispensing of the dishes one at a time through the upper end of the magazine.

6. A dish dispenser of the class described, comprising a stationary support for a stack of nested dishes, of a gravity feed magazine for enclosing the stack of dishes, a toothed guide ring within the upper end of the magazine, and deflected toothed means on the exterior of the upper end of the magazine, adapted to seat on the uppermost dish in the stack to support the magazine in position and furthermore insure individual dispensing of the dishes through the top of said magazine.

7. A dish dispenser of the class described comprising a support adapted to support a stack of nested sundae dishes in an inverted position, a gravity feed magazine adapted to enclose the stack of dishes, a toothed guide ring within the upper end of the magazine to hold the magazine in axial alignment with the stack of dishes, and resilient members formed on the exterior of the upper end of the magazine and seating on the uppermost dish in the stack to support the magazine in position with the apex of the uppermost dish exposed to facilitate the removal of said dish through the top of the magazine.

8. A dish dispenser comprising a support-

ing bracket, a sleeve integrally formed thereon, a set screw engaged in said sleeve, an auxiliary bracket projecting through said sleeve and held in a set position of adjustment by said set screw, a conical support carried by the auxiliary bracket adapted to support a stack of nested dishes in an inverted position, a guide channel on said auxiliary bracket, a magazine slidably engaged over the stack of dishes, toothed means on the upper end of the magazine adapted to rest on the uppermost dish of the stack to support the magazine in position, and a guide member on said magazine having sliding engagement with the guide channel on said auxiliary bracket.

9. A dish dispenser comprising a bracket, a movable magazine, slidably interfitting guide members rigidly engaged on said bracket and on said magazine, a support on said bracket for supporting a stack of nested dishes in an inverted position within said magazine, and toothed means on the upper end of the magazine to facilitate dispensing of dishes one at a time from the magazine.

10. A dish dispenser comprising a clamping bracket, an auxiliary bracket consisting of a plurality of connected parallel arms, one of which is engaged on the supporting bracket, a guide channel rigidly mounted on another of the arms of said auxiliary bracket, a supporting member on the remaining arm of said auxiliary bracket adapted to support a stack of nested dishes in an inverted position, a magazine enclosing said stack of dishes, a guide bar secured on said magazine and having sliding engagement with said guide channel, a toothed centering ring in said magazine for centering the cups with respect to the magazine, and toothed retaining means on the upper end of said magazine adapted to seat upon the uppermost dish in said stack to hold the magazine in a set position and permitting the dishes to be removed one at a time through the upper end of the magazine.

11. A dish dispenser comprising a bracket, a magazine, a guide channel rigidly secured on said bracket, a guide rail rigidly secured on said magazine and slidably interfitting said guide channel, means on said bracket disposed within said magazine to support the magazine upon the stack of dishes and permitting the magazine to move with respect to the bracket each time a dish is removed through the top of the magazine.

12. A dish dispenser comprising a main supporting bracket, an auxiliary bracket adjustably mounted thereon for supporting a stack of dishes in an inverted position, and a magazine covering the stack of dishes and having sliding engagement with the auxiliary bracket to permit the magazine to move downwardly over the stack of dishes each time a dish is removed from the stack.

13. A dish dispenser comprising a mounting bracket, an auxiliary bracket adjustably engaged thereon, an upright arm integrally formed on said auxiliary bracket, a dish support on the upper end of said arm, a gravity feed dispenser removably engaged over said dish support, and having sliding engagement with said auxiliary bracket, and resilient members at the upper end of the magazine to facilitate dispensing of the dishes from the magazine one at a time and furthermore serving as a support for the magazine to hold the same against movement with respect to the auxiliary bracket.

14. A dish dispenser comprising a support for holding a stack of dishes in an inverted position, a gravity feed enclosure for the stack of dishes having slidably interfitting engagement with the support, and flexible means on the interior and on the exterior of the enclosure and engaging the stack of dishes to support the enclosure against movement by gravity and further adapted to insure dispensing of the dishes one at a time through said gravity feed enclosure.

In testimony whereof I have hereunto subscribed my name at Chicago, Cook County, Illinois.

FRANK J. GETZ.