US00D922369S

(12) **United States Design Patent** (10) **Patent No.: US D922,369 S**
Hirvesaar (45) **Date of Patent: ** Jun. 15, 2021**

(54) **AUTOMATED PARCEL TERMINAL**

(71) Applicant: **Cleveron AS**, Viljandi (EE)

(72) Inventor: **Lauri Hirvesaar**, Tallinn (EE)

(**) Term: **15 Years**

(21) Appl. No.: **29/707,104**

(22) Filed: **Sep. 26, 2019**

(30) **Foreign Application Priority Data**

Apr. 10, 2019 (EM) 006372447-0001

(51) **LOC (13) Cl.** **14-02**

(52) **U.S. Cl.**
USPC **D14/307**

(58) **Field of Classification Search**
USPC D14/302–307, 900–902; D13/163; D20/10; D21/332, 325, 369, 370; D99/28; D6/397, 466; 194/206; 361/679.01, 679.02, 679.04, 679.21, 361/679.57, 725
CPC G06Q 20/18; G06Q 20/10; G06Q 20/123; G06Q 20/20; G06Q 30/02; G06Q 30/06; A47F 9/047
See application file for complete search history.

(56) **References Cited**

U.S. PATENT DOCUMENTS

D532,417 S * 11/2006 Becker D14/307
D639,801 S * 6/2011 Kuroda D14/307
D690,293 S * 9/2013 Wilson D14/307
D705,213 S * 5/2014 Smith D14/307
D713,840 S * 9/2014 Daniel D14/307
D734,314 S * 7/2015 Swaine D14/307
D782,466 S * 3/2017 Yepez D14/307
D788,098 S * 5/2017 Thornton D14/307
D820,824 S * 6/2018 Thornton D14/307
D864,193 S * 10/2019 Oosawa D14/307
D881,503 S * 4/2020 Hirvesaar D99/28
D912,655 S * 3/2021 Ahn D14/307

* cited by examiner

Primary Examiner — Austin Murphy
(74) *Attorney, Agent, or Firm* — Meunier Carlin & Curfman LLC

(57) **CLAIM**

I claim the ornamental design of the automated parcel terminal, as shown and described.

DESCRIPTION

FIG. **1** is a zoomed-out perspective view of the automated parcel terminal, showing my new design;
FIG. **2** is close-up perspective view thereof;
FIG. **3** is a different perspective view;
FIG. **4** is a front view thereof;
FIG. **5** is a top plan view thereof;
FIG. **6** is a bottom plan view thereof; and,
FIG. **7** is a side view thereof, the opposite side being a mirror image thereof.
The broken line portions of the figure drawings are included to show portions of the article that form no part of the claimed design.

1 Claim, 6 Drawing Sheets

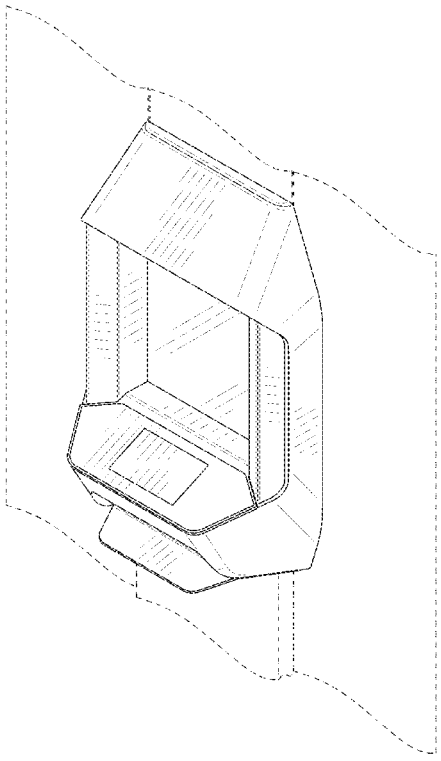

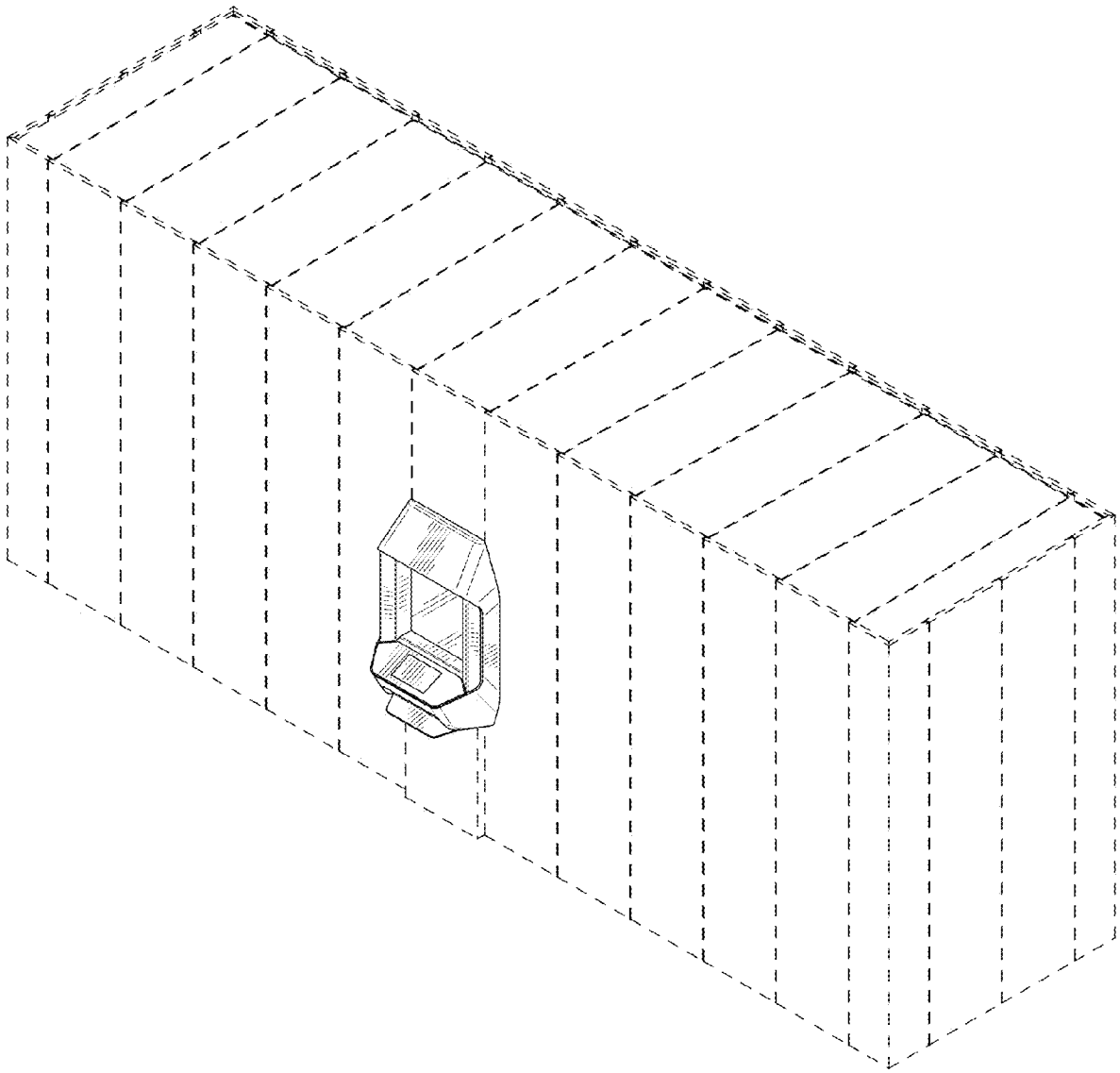

FIG. 1

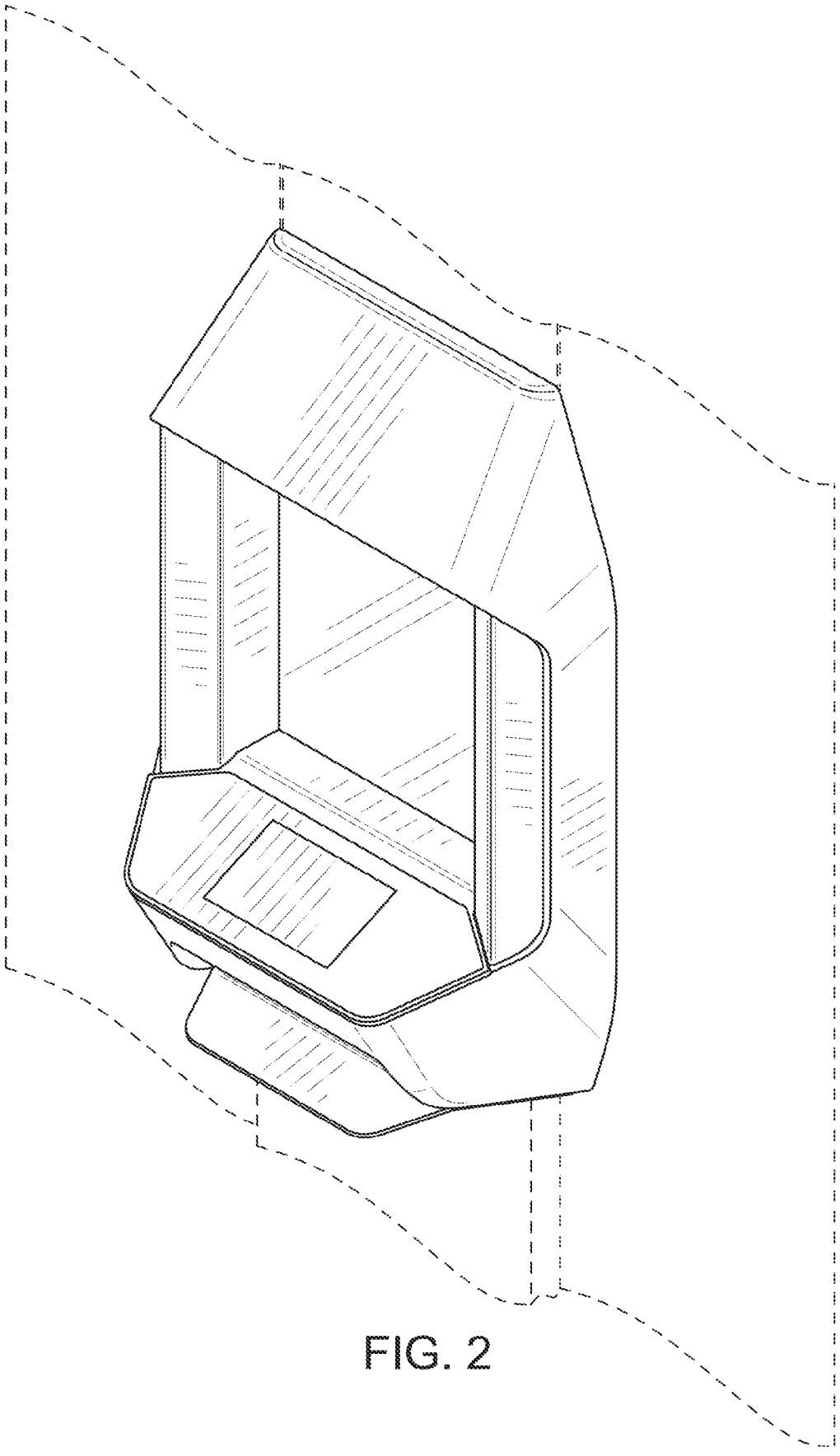

FIG. 2

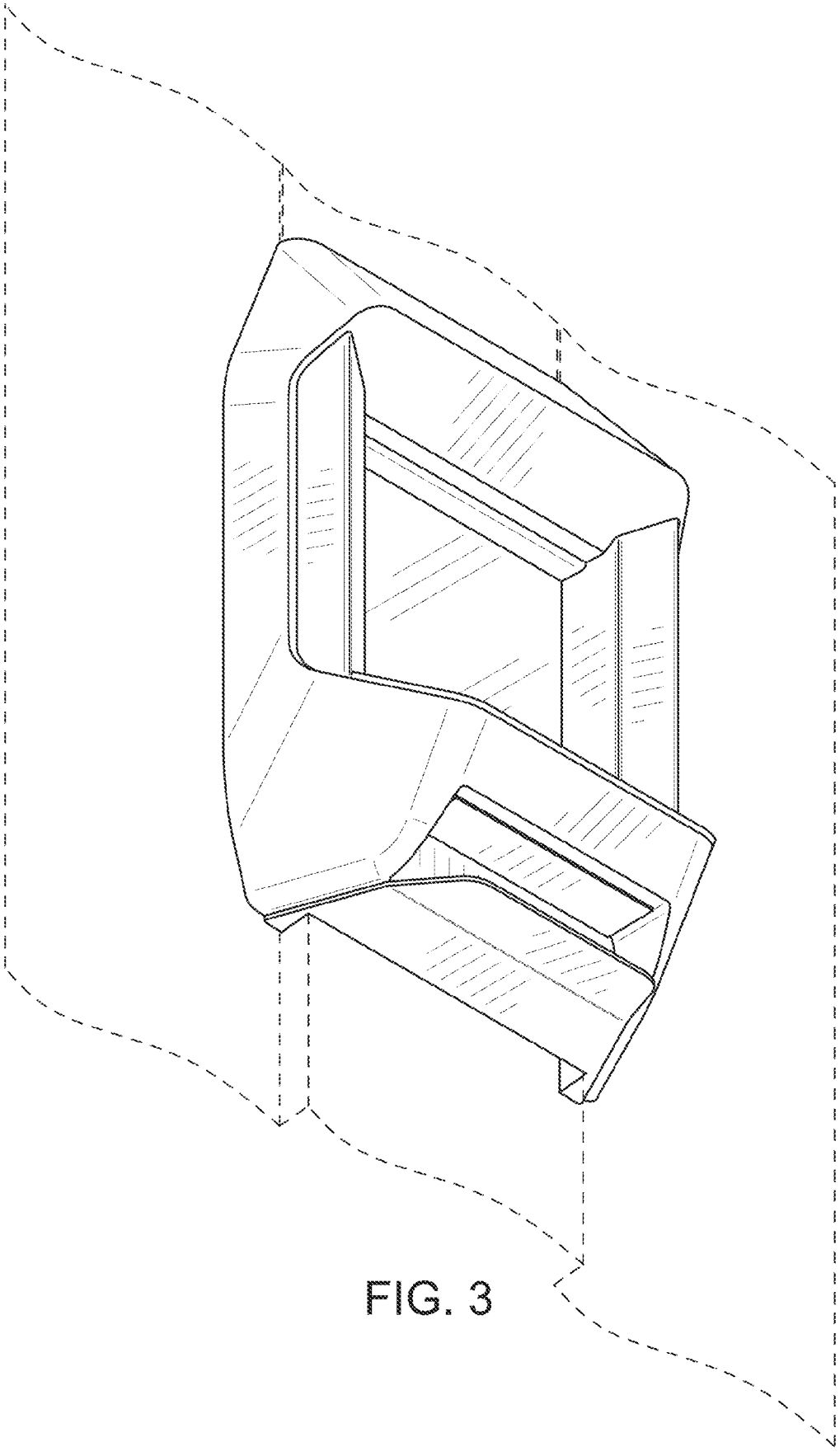

FIG. 3

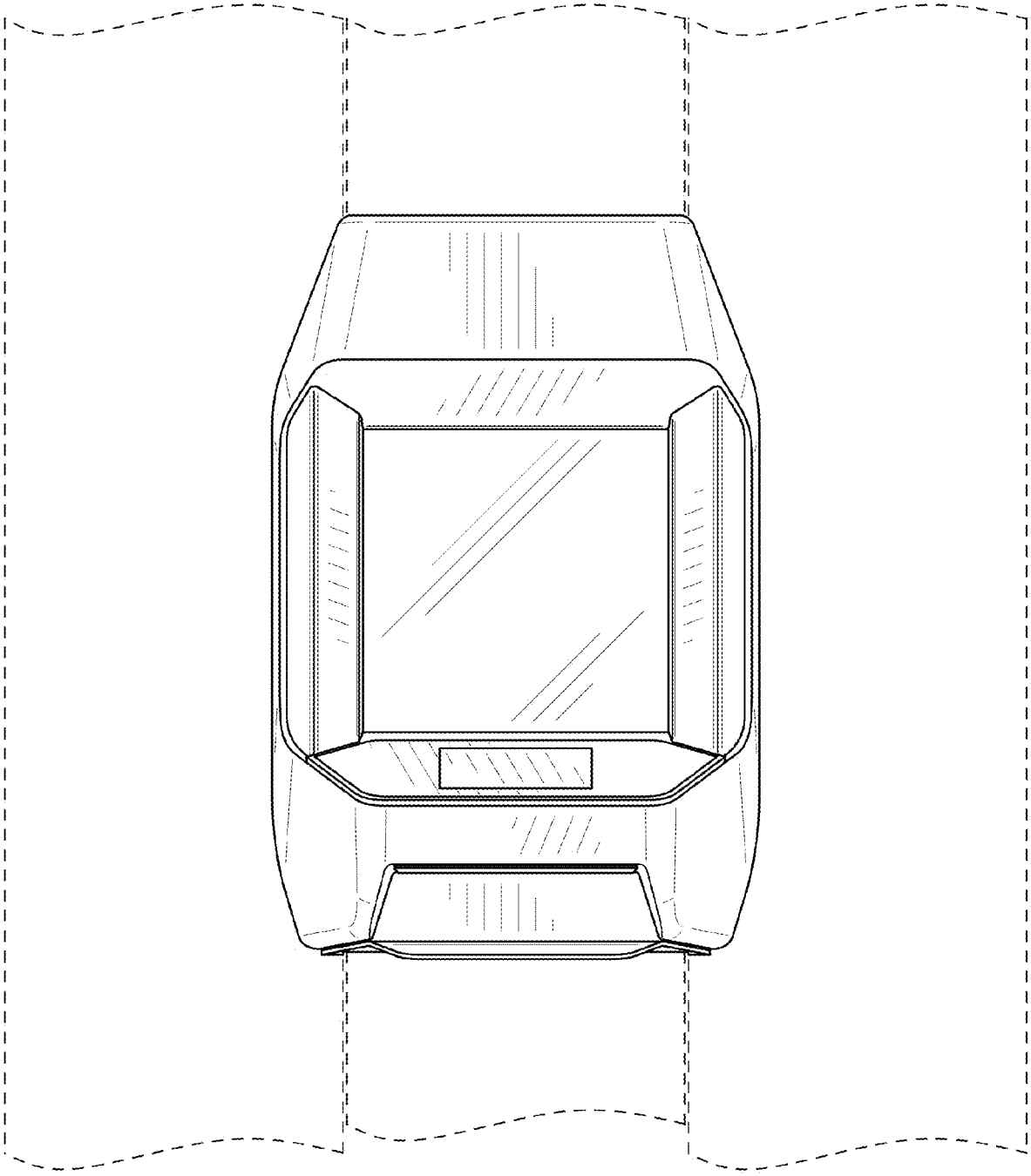

FIG. 4

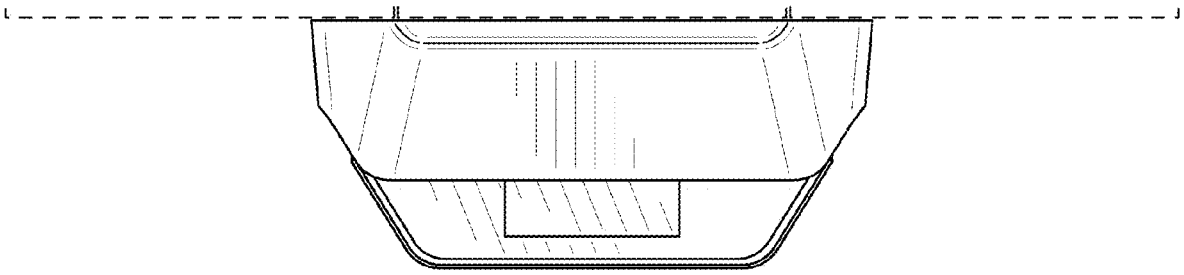

FIG. 5

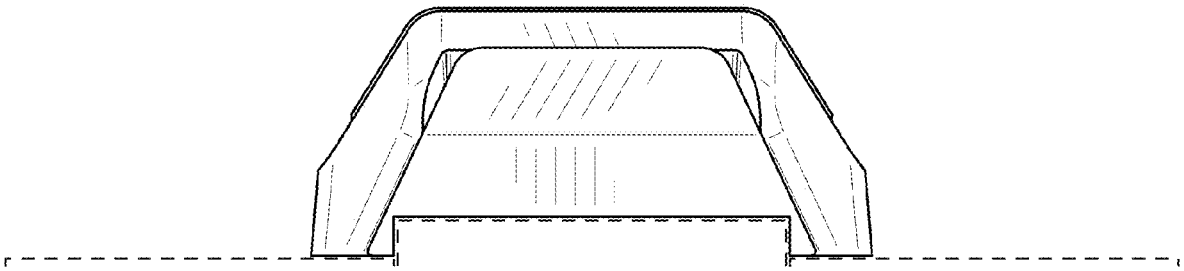

FIG. 6

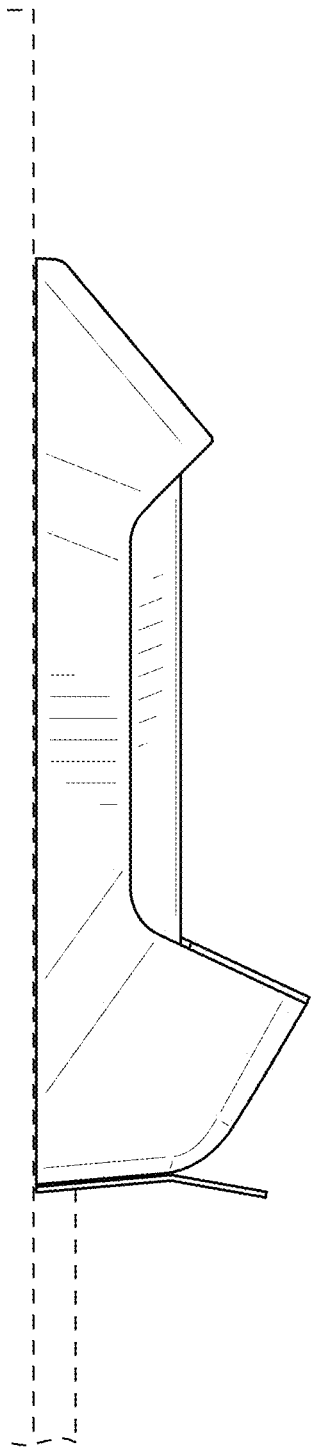

FIG. 7