(12) INTERNATIONAL APPLICATION PUBLISHED UNDER THE PATENT COOPERATION TREATY (PCT)

(19) World Intellectual Property Organization
International Bureau

(43) International Publication Date
5 November 2015 (05.11.2015)

WIPO | PCT

(10) International Publication Number
WO 2015/166502 A1

(51) International Patent Classification:
E05B 53/00 (2006.01)

(21) International Application Number:
PCT/IL2015/050455

(22) International Filing Date:
30 April 2015 (30.04.2015)

(25) Filing Language: English

(26) Publication Language: English

(30) Priority Data:
232413 1 May 2014 (01.05.2014) IL

(71) Applicant: **KNOCK N'LOCK LTD.** [IL/IL]; Cochav Yokneam Building, POB 606, 2069207 Yokneam (IL).

(72) Inventor: **GOLDMAN, Ilan**; 3 Hayasmin Street, 4663013 Herzliya (IL).

(74) Agent: **SOKOL, Edith**; Reinhold Cohn & Partners, P.O.B. 13239, 6113102 Tel-Aviv (IL).

(81) Designated States *(unless otherwise indicated, for every kind of national protection available)*: AE, AG, AL, AM, AO, AT, AU, AZ, BA, BB, BG, BH, BN, BR, BW, BY, BZ, CA, CH, CL, CN, CO, CR, CU, CZ, DE, DK, DM, DO, DZ, EC, EE, EG, ES, FI, GB, GD, GE, GH, GM, GT, HN, HR, HU, ID, IL, IN, IR, IS, JP, KE, KG, KN, KP, KR, KZ, LA, LC, LK, LR, LS, LU, LY, MA, MD, ME, MG, MK, MN, MW, MX, MY, MZ, NA, NG, NI, NO, NZ, OM, PA, PE, PG, PH, PL, PT, QA, RO, RS, RU, RW, SA, SC, SD, SE, SG, SK, SL, SM, ST, SV, SY, TH, TJ, TM, TN, TR, TT, TZ, UA, UG, US, UZ, VC, VN, ZA, ZM, ZW.

(84) Designated States *(unless otherwise indicated, for every kind of regional protection available)*: ARIPO (BW, GH, GM, KE, LR, LS, MW, MZ, NA, RW, SD, SL, ST, SZ, TZ, UG, ZM, ZW), Eurasian (AM, AZ, BY, KG, KZ, RU, TJ, TM), European (AL, AT, BE, BG, CH, CY, CZ, DE, DK, EE, ES, FI, FR, GB, GR, HR, HU, IE, IS, IT, LT, LU, LV, MC, MK, MT, NL, NO, PL, PT, RO, RS, SE, SI, SK, SM, TR), OAPI (BF, BJ, CF, CG, CI, CM, GA, GN, GQ, GW, KM, ML, MR, NE, SN, TD, TG).

Declarations under Rule 4.17:

— *as to applicant's entitlement to apply for and be granted a patent (Rule 4.17(ii))*

— *of inventorship (Rule 4.17(iv))*

[Continued on next page]

(54) Title: LOCK COMMUNICATING WITH A USER DEVICE FOR ACTIVATION

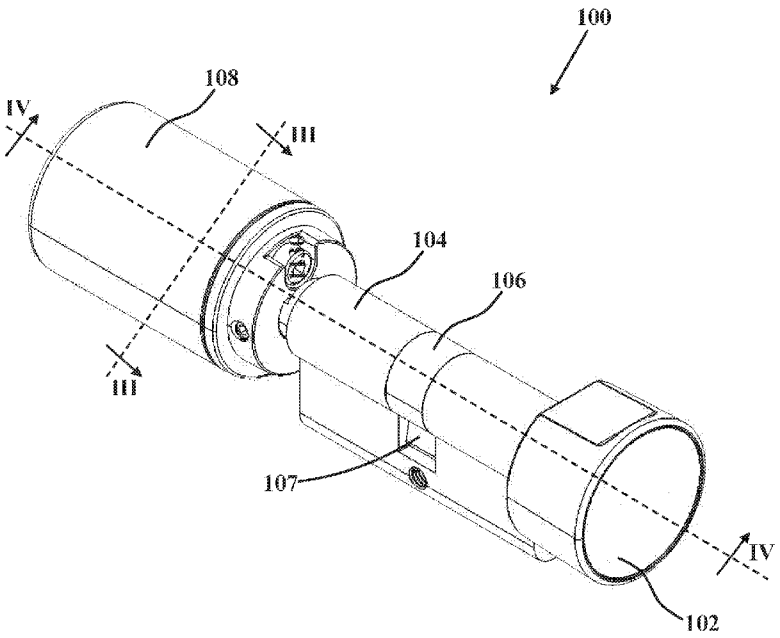

Fig. 1

(57) Abstract: A lock comprising a user accessible unit for opening the lock, an electronic utility that is configured for wirelessly pairing with a user device for switching the lock from a locked to an open state, and an electromechanical assembly for switching the lock from a locked to an open state, wherein the user accessible unit is configured for operation in a two-stage process, of which the first stage activates the electronic utility to thereby pair with a user device and the second stage, seamlessly continuous with the first stage, opening the lock in the presence of an authorized user device.

WO 2015/166502 A1

Published:

— *with international search report (Art. 21(3))*

— *before the expiration of the time limit for amending the claims and to be republished in the event of receipt of amendments (Rule 48.2(h))*

LOCK COMMUNICATING WITH A USER DEVICE FOR ACTIVATION

TECHNOLOGICAL FIELD

The present disclosure concerns operation of a lock comprising an electronic utility that is operable upon communication with a user device.

BACKGROUND ART

References considered to be relevant as background to the presently disclosed subject matter are listed below:

[1] WO 2014/0006615

[2] PCT/IL2015/050384

[3] WO 2015/049680

Acknowledgement of the above references herein is not to be inferred as meaning that these are in any way relevant to the patentability of the presently disclosed subject matter.

BACKGROUND

Many high security electronically-operated locks require the entry of a code. This code typically needs to be physically inputted into a designated interface, such as a keypad. Other common code delivery systems require the operator to physically initiate the code transmittal from a hand-held device to the lock by operating a signaling utility within the hand-held device.

There are also available locks that are intended to wirelessly pair with a user device, e.g. a smartphone with a proper application running therein, and upon such pairing that requires sending out and receiving coded signals between the lock and the device, the lock opens. There are basically 2 kinds of locks of this nature. One is of a kind that continuously transmits a Bluetooth data signal and when an authorized user-

device is in the vicinity, it receives the data signal, decodes it and sends out a coded response signal that when received in the lock and decoded therein causes the lock to open. However, this continuous transmission can rapidly drain the battery within the lock.

Another type of lock that opens upon Bluetooth pairing requires the user to do a separate operation, e.g. press a button or a keypad that wakes the electronic utility of the lock to initiate the pairing process.

GENERAL DESCRIPTION

The present disclosure provides a lock, particularly a cylinder lock that may be fitted into doors or other closures. The lock of this disclosure is secure in that it can only be opened by an authorized user, on the one hand, and is operable in a natural way without the need for physically inputting any code by the authorized user or separately "waking up" the electronic utility within the lock, on the other hand. An *authorized user*, according to the disclosure, is one equipped with a user device ("*user device*") that can pair with the electronic utility within the lock to open the lock ("*an authorized user device*"); namely a user device that can or is configured to receive a first, typically encrypted signal from the lock's electronic utility and in response transmit a second, lock-specific opening signal, also typically encrypted, to the lock that once received by the lock induces it to open. The user device may be a dedicated device; or a mobile communication device, e.g. a smartphone that runs an application that configures the smartphone to receive the first signal from said electronic utility, decrypt the signal, and then issue the second, encrypted signal to said electronic utility. This opening signal causes the electrically operated mechanism within the lock to displace an engagement mechanism that couples the lock mechanism with an external user-accessible unit of the lock, thereby permitting opening of the lock by operation of said external user-accessible unit. The authorized user operates the lock in the same manner he would operate the lock had it been open already, oblivious to the fact that his action on the user-accessible unit initially activates the electronic utility within the lock that leads to wireless pairing (e.g. via the Bluetooth protocol) with an authorized user and consequently opening of the lock.

The security of the lock is maintained by encryption of either or both of (i) the first signal that is transmitted by the lock's electronic utility to the user device and being decodable therein and (ii) the second signal transmitted by the user device in response to that received from the lock, that is decrypted by a coding/decoding module within the lock's electronic utility and induces the activation of the electrically operated mechanism.

As may be appreciated, the signals transmitted by the lock or received thereby may be a variable signal, according to a predetermined sequence, such as that disclosed in PCT Applications WO 2014/0006615 and PCT/IL2015/050384, the relevant parts of which are incorporated herein by reference.

One of the results, according to some embodiments of the disclosure, is that the lock can be opened by a user in a natural manner without the need for the user to physically input a code for activating the lock, as long as he/she carries the proper user device. The signals that are communicated may typically be wireless electromagnetic signals, e.g. employing the Bluetooth communication protocol but, as will be appreciated, the disclosure is not limited to any specific type of signal.

The user device may be configured for permanent pairing with the lock's electronic utility, may be configured for a limited number of pairings with the lock, may be configured for pairing at a defined time window, may be configured for pairing with a number of locks, etc.

This disclosure provides a lock comprising an external user-accessible unit for opening the lock, an electronic utility that is configured for wirelessly pairing with a user device, and an electromechanical assembly for switching the lock from the locked to the open state upon receipt of an appropriate command from the electronic utility. The external user-accessible unit is configured for operation in a two-stage process, of which the first stage activates the electronic utility to thereby pair with a user device and the second stage, seamlessly continuous with the first stage, opening the lock in the presence of an authorized user device. For said pairing, the electronic utility is configured for (i) transmitting one or more first wireless signals, (ii) receiving one or more second wireless signals from a user device and (iii) in the event of receipt of a signal from an authorized user device (e.g. one carrying a lock-opening code), issuing a command signal to an electric component of the electromechanical assembly to open the lock.

The term *"pairing"*, in the context of this disclosure, denotes a wireless (e.g. optical, IR, RF, Bluetooth) establishment of communication between the lock's electronic utility and the user device using a communication protocol that is intended, in the event the device is an authorized device, to induce the electronic utility to issue said command signal.

The disclosure, by one embodiment, provides a lock that comprises an external user-accessible unit, a lock mechanism with locking element, an electronic utility and an electromechanical engagement assembly. Said engagement assembly comprises an electric sub-assembly that drives a mechanical sub-assembly adapted to engage the lock mechanism or an element thereof to thereby block coupling of said unit with locking element. The electronic utility is electrically coupled to said electric sub-assembly and comprises a trigger element (that may, for example, comprise a micro-switch), and is configured for (i) wireless pairing with an authorized user device and (ii) issuing, upon pairing, a lock-activation signal to activate the electric sub-assembly, to thereby drive the mechanical sub-assembly to couple the external user-accessible unit with the locking element. The pairing may be through a communication protocol that includes one or more first signals transmitted by the electronic utility and one or more second signals transmitted by the user device in response thereto. The communication may be entirely encrypted or may be partially open and partially encrypted (e.g. the signal transmitted by the electronic utility may be open while that transmitted by the user device may be encrypted and then decrypted by a module of the electronic utility). The lock will open only upon receipt of the proper (typically encrypted) lock opening code from the user device. The electronic utility may include a transceiver module or separate transmitter and receiver modules. Upon pairing and receipt of a lock opening signal from the user device, the electronic utility activates said electric sub-assembly to thereby drive the mechanical sub-assembly. Thus, the external user-accessible unit (i) is operable by a user to open the lock, (ii) is coupled to the trigger element such that a first stage of the operation actuates the trigger element, and (iii) is capable of coupling to the locking element upon activation of the electric sub-assembly.

Upon pairing with the user device, said electronic utility activates the electric sub-assembly to drive the mechanical sub-assembly to thereby cause coupling of said external user-accessible unit with said locking element such that a second stage of said operation, substantially continuous with said first stage, opens the lock.

The term *"substantially continuous"* denotes that the opening of the lock by the user is smooth and proceeds in a natural way as if opening an unlocked lock; although by some embodiments there may be some delay, e.g. fraction of a second, until full engagement and coupling between the external user-accessible unit and the lock mechanism. This may mean, for example, that the lock operates with the need for a user to perform a first operation stage to cause engagement of the external user-accessible unit with the lock mechanism, followed by a second operation stage after such engagement.

In other embodiments, rather, in operating the lock, the user would be oblivious to the fact (save for a potential click, vibration or other mechanical indication that the engagement mechanism emits in its operation) that an essentially two-stage procedure actually occurs. In other words, the two-stage procedure would occur internally within the lock in tandem with a natural operation of the lock as if the lock would have been *a priori* unlocked.

By an embodiment of this disclosure, said external user-accessible unit is at an exterior lock end intended for positioning at an exterior side of a closure (e.g. an entrance door) and the lock comprises an internal user-accessible unit at the opposite, i.e. interior lock end, operable by the user inside the closure. The electromechanical assembly and the electronic utility are typically housed within said internal user-accessible unit. In some embodiments, at least one of the external and internal use-accessible units is a knob or a handle. In other embodiments, both the external and internal use-accessible units are in the form of a knob.

Said engagement assembly may be adapted to engage an element of the lock mechanism (e.g. by some embodiments being a plunger, as discussed below) that may be configured such that, upon displacement, the engagement assembly can couple and decouple (depending on the displacement direction) between said external user-accessible unit and the locking element. Any arrangement that can induce such coupling and decoupling may be used in accordance with the disclosure.

The electric sub-assembly may comprise a solenoid, an electric motor or a piezoelectric element.

By an embodiment of this disclosure said engagement assembly engages the lock mechanism or an element thereof and released said lock mechanism or element

upon activation to thereby couple the external user-accessible unit with the locking element.

By an embodiment of this disclosure the coupling of the external user-accessible unit and the locking element is rotational.

The lock mechanism comprises, by an embodiment of this disclosure, a plunger extending internally along an axis within the lock between the external and internal user-accessible units and having a first end proximal said external user-accessible unit and second end proximal said internal user-accessible unit. The plunger is axially displaceable between a reward state, in which its second end is engaged by an engagement element of the mechanical sub-assembly, and being biased into a forward state in which it couples the external user-accessible unit to the locking element. The engagement element may be a revolvable element that is coupled to an electric motor that revolves said element between an engaging state, in which it engages the second plunger end, and a releasing state in which it permits the plunger's displacement to its forward state.

The plunger may be configured for rotational engagement of the external user-accessible unit upon axial displacement to its forward state, to thereby rotationally couple said unit with the locking element. In addition (or in the alternative), the plunger may be configured for rotational engagement of the locking element upon axial displacement to its forward state, to thereby rotationally couple said unit with the locking element.

By an embodiment of this disclosure, the electronic utility comprises a first sensor, e.g. optic sensor or mechanical sensor, for monitoring the status of at least one of mechanical sub-assembly or the engagement element. It may also comprise a second sensor for providing indication of the locking status. The locking status may be an (i) indication of the status of an element in the mechanical sub-assembly that is indicative of whether the lock is open or locked, (ii) indication of the status of the engagement element, and/or (iii) may be a direct indication of the status of the locking element.

By one embodiment, the external user-accessible unit is a knob or handle operated by rotation. In such a case, the first stage of the rotation may cause the actuation of the trigger element and hence the activation of the electronic utility, and the second stage, e.g. continuing smoothly from the first stage without any need for a user to temporary halt the rotation to then proceed to the second stage. Thus, the operation of

the lock, which mechanistically proceeds in the aforementioned two distinct sequences, will be externally seen and felt by a user as one operation.

By another embodiment, the external user-accessible unit is a retractable-extendible handle or knob that (i) can be pressed to activate the signal-transmitting module, and (ii) extends, upon receipt of the lock activation signal by the electronic utility to permit user operation for opening the lock. In such embodiments, the knob may (i) axially reciprocate between a retraced state in which it is accommodated within a recess in the lock and an extended state in which is extends out of said recess and accessible to a user, and (ii) may be displaced into the extended state by the displacement of said plunger into its forward state.

The first stage of the operation will, thus, involve pressing on knob or handle to thereby actuate the trigger element and hence activate the electronic utility and while the plunger extends, e.g. as a result of the electrically operated mechanism induced release of a spring-biased latch, the external user-accessible unit is coupled with the lock mechanism; and once the external user-accessible unit extends, the lock can be opened. Again, this operation proceeds as if the lock would have been *a priori* unlocked. For example, the activation of the signal transmitting module may lead to substantial simultaneous extension of said external user-accessible unit and activation of the electronic utility; or the extension and said engagement may be one operation induced by said electronic utility.

By one embodiment the retractable-extendible unit comprises a pair of wings that have a housed state, in which they are housed in a radial bore passing radially through said unit, and have a deployed state in which they extend radially out of the bore in opposite radial directions and are biased into the deployed state. Thus, once said unit extends into its extended state, the pair of wings are deployed, bettering the user's grip of the unit as compared to such a unit without the wings.

A lock comprising a user-accessible, axially retractable and extendible unit with such wings is an independent aspect of this disclosure, even if outside the context of a lock of the kind described above. Causing extension from the retracted state into the extended state may be achieved by axially pushing said unit in the opposite direction and releasing, whether through the pairing mechanism described above or a mechanical or electromechanical arrangement, e.g. of a kind as known *per se*.

As noted, at least one of the data signals, typically at least that transmitted by the user device that can induce the electronic utility to issue said command signal, may be encrypted and accordingly the electronic utility may comprise at least one of a data signal encryption module for encrypting the transmitted wirelessly transmitted signal and a signal decrypting module for decrypting the wirelessly received signal.

In the following the term *"first signal"* will be used to denote the one or more data signals wirelessly transmitted by the lock's electronic utility; and the term *"second signal"* will be used to denote the one or more data signals wirelessly transmitted by the user device. The first and second signals are intended to pair the lock's electronic utility with the user device.

In the case of the embodiment in which the signal is an electromagnetic wireless signal, the electronic utility may comprise a wireless transceiver for transmitting first signals and for receiving second data signals. The electronic utility may also comprise data storage for storing series of codes, which may be codes used in a certain pre-determined sequence, codes used for specific timeframes, etc.

Such security enhancing features may include, for example, encrypted signals that are specific for a defined time window to operate the lock, or a specific lock within a plurality of locks. The user device may be equipped with a location identifying functionality, e.g. one based on a global positioning system (GPS), such as a typical GPS software application typically installed in mobile communication devices and is configured to deliver one or more lock-specific data signals (in response to one or more data signals from the lock's electronic utility) in a location-specific manner. This permits accurate monitoring of the user device's position and its management based thereon; for example permitting generation of a second, lock-opening signal only if and when the user device is in the vicinity of a specific lock (i.e. geo-fencing).

For example, the electronic utility of the lock may include a processor module that may be pre-programmed with a plurality of access codes, or such codes may be stored in a memory being part of or associated with the processor module. One or more of such codes may then be transmitted as the first data signal from the electronic utility's signal-transmitting or transceiver module to the user device. For high security use, each first signal may be an encrypted single use code to be used one time only and then deleted from, inactivated or marked as used in the processor. It is also possible, under some embodiments, particularly in high security applications, to require a combination

of two or more encrypted signals or codes, e.g. at a defined interval, for opening the lock.

Once receiving an open status indication, the controller may further deliver encrypted data signals that may include other components to the user device to further be received by the signal-receiving utility of the lock. For example, other than access control, the second signals may encode instructions that define operational parameters of the lock's processor module. The operational parameters may be a control code for subsequent opening of the lock, may be change of operational parameters, change of functions, a new series of access control permissions, and others. In general, through the use of the user device, any desired instruction to or any desired programming of the lock's processor module may thereby be delivered without the need to connect the lock to an on-line system or without the need to connect any physical devices to the lock for data transmission.

According to some embodiments of the disclosure, the electronic utility is normally in a dormant state and is activated by the trigger element upon initial operation of the external user-accessible unit. Once activated, the electronic utility, by some embodiments, may issue an open/closed indication signal that may be received by the user device and may provide the locking status indication to the user. In addition, in some security installations, the locking status indication may be transmitted by the user device to a central controller or server, e.g. via wireless communication or over a cellular network. In an embodiment, the signal-transmitting module of the lock is adapted to continuously transmit a lock's status to the user device, i.e. transmitting an indication of the lock's status starting from actuation of the trigger element and opening of the lock until a user locks the lock. This transmission may be encrypted. Such open/lock status indication may permit to monitor the status of the lock, even in the case of an off-line lock; to monitor the specific code that was used for a specific opening, in the case of high security installation where the code is intended to serve for a single use; to issue a reminder to the user to lock the lock in case this was accidentally omitted; etc.

According to some embodiments of the disclosure, the opening may be for a defined time period and if the opening sequence is not continued, the engagement mechanism may disengage the external user-accessible unit from the lock mechanism. By other embodiments, the engagement may be active as long as the lock is in the open state to permit locking of the lock. Typically, upon locking, the electromechanical

assembly causes disengagement of the lock mechanism from the external user-accessible unit.

By some embodiments of the disclosure, the lock may automatically switch to a locked state, in which the external user-accessible unit is disengaged from the lock mechanism after a defined time period of engagement. By way of example, a door that includes such a lock, may have an internal handle, knob, etc. (i.e., the internal user-accessible unit) that permits a user to open the lock from the inside, even when the lock is in the locked state. Thus, access from the outside will require a communication exchange sequence between the lock and the user device, as described above, while access from the inside may not. According to other embodiments, for added security, the same mechanism will operate also for opening from the inside.

As noted above, one of the features of the disclosure is that it does not require the user to physically input any code, whether to the lock or whether to the user device. The whole operation is practically automatic, namely, once the user moves said external user-accessible unit, the first stage of the movement induces the entire activation process that results in the engagement of said external user-accessible unit with the lock mechanism and the second stage opens the lock. These two stages may be substantially continuous; namely other than potentially hearing a click indicative of activation of the engagement mechanism, the opening will be natural as if using a regular door handle or knob. It is to be noted that the use of the terms *"first stage"* and *"second stage"* is only from an internal lock operation sequence point of view and is not meant to indicate two discrete user-operated stages of moving said external user-accessible unit. On the contrary, these two "stages" are substantially non-discernible by the user are substantially one continuous movement of said unit.

By another aspect, the disclosure provides a system comprising (i) a lock of the kind described above; and (ii) a user device containing application software that can configure the device to receive said first signal and issue said second signal.

BRIEF DESCRIPTION OF THE DRAWINGS

In order to better understand the subject matter that is disclosed herein and to exemplify how it may be carried out in practice, embodiments will now be described,

by way of non-limiting example only, with reference to the schematic representations seen in the accompanying drawings, in which:

Fig. 1 is a perspective view of a lock according to an embodiment of this disclosure.

Figs. 2A and **2B** are perspective views of a lock according to another embodiment of this disclosure in, respective, locked and open states.

Figs. 3A and **3B** are perspective views of the lock of Fig. 1 with the internal user-accessible unit being cut along lines III-III in Figs. 1 and 4A-4B in, respective, locked and open states.

Figs. 4A and **4B** are longitudinal cross-sections of the lock of Fig. 1 along line IV-IV in Fig, 1 in, respective, locked and open states.

Fig. 4C is a perspective view of the internal user accessible unit and the plunger (which is part of the lock mechanism) extending therefrom with other parts removed for ease of illustration.

Fig. 4D is a perspective exploded view from a different direction illustrating also the cam.

Figs. 5A to **5C** show cross-sections of the internal user-accessible unit of the lock of Fig. 1 along lines III-III in Fig, 1 in locked closed state (Fig. 5A), in an open state (Fig. 5B) and in an open state with the cover of the engaging element being removed (Fig. 5C).

Figs. 5D and **5E** are perspective views, in isolation, of the engagement element and the plunger in, respective, locked and open states.

Figs. 6A and **6B** are perspective views of the lock of Fig. 2A with the internal user-accessible unit being cut along lines VI-VI in Fig, 2A in, respective, locked and open states.

Figs. 7A and **7B** are longitudinal cross-sections of the lock of Fig. 2A along line VII-VII in Fig, 2A in, respective, locked and open states.

Figs. 8A and **8B** are longitudinal cross-sections of the lock of Fig. 2A along line VIII-VIII in Fig, 2A in, respective, closed and open states.

Fig. 9A is a block diagram illustration of the electric and electronic components of the system, according to an embodiment of this disclosure.

Fig. 9B is a block diagram illustrating the operational sequence to open a lock, according to this disclosure.

DETAILED DESCRIPTION OF THE DISCLOSURE

In the following description the disclosure will be illustrated with reference to two specific embodiments of cylinder locks of this disclosure, perspective views of which are seen in Fig. 1 and Figs. 2A-2B. For ease of description, the locks of these embodiments will be referred to herein as the *"rotation-activated lock"* and the *"pressure-activated lock"*, respectively. It should also be noted that these two embodiments are meant to illustrate the general principles of this disclosure and should by no means be construed as limiting.

The two specific embodiments that will be described are schematically illustrated in the annexed drawings. These drawings illustrate both a rotation-activated lock and a pressure-activated lock in two states, one of these states will be referred to herein as the "*locked state*", being the state in which the lock cannot be opened, namely, there is no coupling between the external user accessible unit to permit opening of the lock; and the other state will be referred to herein as the "*open state*" in which such coupling is enabled. These terms are intended for ease of description only and are not to be construed in any other manner. As will also be appreciated from the following description, the locked state is one in which the user accessible unit is decoupled from the locking element, while the open state is one in which such coupling exists.

Fig. 1 shows a rotation-activated lock **100**, according to an embodiment of this disclosure. It comprises an external user accessible unit **102**, cylinder **104**, with locking element in the form of a cam **106**, and an internal user accessible unit **108**. When installed in a door or closure the project **107** of the cam engages a closure element, e.g. a bolt, to open it in one rotational direction and close it in the other.

A pressure-activated lock according to an embodiment of this disclosure is illustrated in Figs. 2A and 2B.

In Figs. 2A, 2B and generally throughout this disclosure, the same reference numerals shifted by 1000 will be used to refer to elements in the pressure-activated lock embodiment that are functionally equivalent and at time structurally similar to elements in the rotation-activated lock embodiment. Thus, for example, element 1102 in Fig. 2A is functionally equivalent to element 102 in Fig. 1. In case of same or like function, the description will not be repeated when describing the pressure-activated lock

embodiment and the reader should refer to the description of the rotation-activated embodiment for explanations on their structure and function.

The pressure-activated lock **1000** is seen in a locked state (Fig. 2A) and in an open state (Fig. 2B). Lock **1000** includes a user accessible unit **1300** which in the closed state of Fig. 2A is retracted and accommodated within recess **1302** formed in cylinder portion **1304**; and in the open state is extended, as seen in Fig. 2B, the extension being effected by a mechanism to be described below. As can also be seen, unit **1300** has two opposite wings **1306**, **1308** that are biased to deploy into the opened state shown in Fig. 2B and thus automatically deploy when unit **1300** is extended out of recess **1302**.

As can also be seen in Figs. 2A and 2B, portion **1304** is separated from the remaining portions of cylinder **1104** by gap **1310** that is bridged by integral bridge portion **1312**. The two portions are held together also by a looped metal band wrapped around two vertical pins (not shown in Figs. 2A and 2B. but can be seen in Figs. 8A, 8B and marked there **1316** and **1318**). This arrangement is designed as a means against tampering. In the event of tampering event by somehow grabbing and shaking unit **1300** or portion **1304**, bridge **1312**, which is the weak point of link between portion **1304** and cylinder **1104**, will break. However such shaking will not affect other elements of the lock, particularly the elements responsible for coupling between the plunger and the cam that, as will be explained below, functionally couples between unit **1300** and cam **1106**.

The operation of the lock of Fig. 1 will now be described with reference to Figs. 3A-5C.

As can best be seen in Figs. 4A and 4B, the internal user accessible unit **108** houses an electro-mechanical assembly, generally designated **110** and also an electronic utility **112**. The electro-mechanical assembly includes an electric sub-assembly that comprises a battery **114**, electric motor **116** with its associated gear box **118** that is rotationally coupled to mechanical sub-assembly **120** (whereby activation of the motor rotates the mechanical sub-assembly **120**.The mechanical sub-assembly comprises an integral engagement element **122**. The electronic utility **112**, better seen in Figs. 3A and 3B, includes a PCB board **124** holding a trigger element in the form of micro-switch **126** having a lever **128**. The electronic utility is electrically coupled through leads (see Fig. 9A) to battery **114** and electric motor **116.**

Upon activation of the electronic utility it induces activation of the motor to drive the rotation of the mechanical sub-assembly to thereby switch the system from the closed state, shown in Figs. 3A and 4A, into the open state of Figs. 3B and 4B, as will be further explained below.

Accommodated within cylinder **104** is plunger **130** that has two parts: a front part **132** and a rear part **134** that are axially threaded to one another at **135**. The two part structure of plunger **130** is dictated by considerations of assembling the lock, although functionally the plunger operates as one unit

Plunger **130** is accommodated in an elongated axial bore **136** formed within block **137** with a front portion **138**, a narrower, mid-portion **140** and a rear portion **141**. Plunger **130** can axially reciprocate within the bore **136**, between the rear position in the closed state of Fig. 4A and the forward position in the open state of Fig. 4B. The plunger is forwardly biased in the direction of arrow **142** by an associated spring **144** fitted around the plunger and accommodated between step **146** at the rear end of bore portion **138** and shoulders **148** of the plunger. As can further be seen, the rear part **134** of the plunger has a wider portion **150** that limits the forward displacement of the plunger upon engagement with step **151** at the front end of bore portion **141**.

As can best be seen in Fig. 4C the front end section **152**, which is forward to shoulders **148**, has a rear end portion **154** with a generally rectangular cross-section and a front portion **156** with rounded narrow side faces defined between broader parallel straight faces. Defined within cam **106** is a rectangular bore **158**, so dimensioned that when portion **154** fits into bore **158**, the cam and the plunger become rotationally coupled. The cross-sectional dimension of portion **156** is such that when within bore **158**, the plunger and the cam are rotationally decoupled, namely, the plunger can freely rotate with respect to the cam, without causing rotation of the latter. This decoupled state is seen in Fig. 4A.

The front end portion **156** of the plunger is accommodated within recess **160** formed within member **162**, which is shaped to match the shape of portion 156 and consequently member **162** and the plunger are rotationally coupled. Member **162** can rotate within cylinder **104** and is rotationally coupled to external user accessible unit **102**. Thus, in the closed state of Fig. 4A, rotation of unit **102** will rotate member **162** and hence the plunger **132** (without rotation of cam **106**).

Integrally formed at the rear end of plunger part **134** is an arresting member **170** that is integral with and projects radially from the rear end of the plunger to define shoulders **172** that rest against engagement element **122**. The engagement and disengagement between arresting member **170** and the engagement element **122**, as well as the structure of the engagement element are best seen in Figs. 5D and 5E.

Engagement element **122** has an integral, generally radially projecting engagement member **167**, which has a slanted rear face **165** defined between a narrow first end **163** and a broad second end **161**. In the locked state of Figs. 4A, 5A and 5D shoulders **172** of arresting member **170** rest against end **161** of the rear face **165** of member **167**. Upon rotation, in the direction of arrow **174** in Figs. 5A and 5D, to the position seen in Figs. 4B, 5B and 5E, the plunger **130** is forwardly displaced to the position seen in Figs. 4B and 5E (by the biasing action of spring **144**). In this state, portion **154** comes to rest within bore **158**, whereby plunger **130** becomes rotationally coupled to cam **106** and consequently rotation of unit **102** will rotate the cam to thereby open a bolt (or the like) of the closure in which the lock if installed.

The arresting member **170** has a general annular shape and a rear face **173** that is gradually slanted in both directions between a narrow side **176** and a wide, opposite side **178**. As can also be seen, lever **128** rests against said rear face. Thus, given the slanted design of the rear face, upon turning of the plunger by rotation of unit **102**, lever **128** will be pushed in a rear-ward direction, whereupon micro-switch **126** will activate the electronic utility **112**. This activation, as will be further described with respect to Figs. 9A and 9B, induces the electronic utility to transmit (through a transmitter or transceiver module thereof) a first, encrypted wireless signal to a user device and in the event said device is properly configured (e.g. having the appropriate application software) it will issue a second, encrypted wireless signal that once received by the electronic utility induces it to activate the electric motor to rotate the mechanical sub-assembly **120.** Consequently plunger **130** will be released into the forward position, functionally rotationally coupling the external user accessible unit **102** with cam **106**, as explained above. Thus, in an essentially seamless manner, in the presence of an appropriately configured user device, a first rotational manipulation of unit **102** will activate the electronic utility which will send a first, encrypted wireless signal to the user device and upon receipt of a second, encrypted wireless signal from said device in response to the first, the electro-mechanical assembly will be activated to thereby lead

eventually to said coupling. Thus, in the presence of the appropriate carried device, the lock can be opened; in the absence of such a device, the electronic utility will be activated but the response signal that leads to activation of the electro-mechanical mechanism will be absent and hence the lock will remain in the closed state.

The switch between the open state of Figs. 4B, 5B and 5E to the locked state of Figs. 4A, 5A and 5D proceed automatically, typically after a time window sufficient for a user to open the lock, such time window may be several seconds to tens of seconds. At the end of such time window, the electronic utility will cause reactivation of the electric sub-assembly, whereby electric motor **116** will rotate in the opposite direction, thereby rotating engagement element **122** in the direction opposite to arrow **174**. In such rotation, the narrow first end **163** of the engagement member will come into position below shoulders **172** and the ongoing rotation and engagement between rear face **165** and shoulders **172** will cause rear-ward displacement of the plunger and consequently decoupling between unit **102** and the cam.

Engagement element **122** is part of a mechanical sub-assembly **120** which, as can be seen in Figs. 4A and 4B, consists in addition to engagement element **122**, also of a motor coupled member **181** and a mechanical buffer arrangement **179** there-between. Member **181** is rotationally coupled to motor **116** through axial **177.**

The structure of the buffer arrangement is similar to that described in PCT Application having Publication No. WO 2015/049680, with particular reference to Figs. 7A-9B and the accompanying description; the relevant contents of which is incorporated herein by reference. Briefly, the buffer arrangement has the capability to store some of the mechanical energy of the motor and then transfer it to the engagement element. This, among others, serves to protect the motor against damage that may have been imparted had the motor been connected directly to the engagement element, in the event that the engagement element rotation is blocked or at least partially blocked for some reason.

The buffer arrangement comprises an elastic element in the form of spring **175** that is coupled via sliding blocks **167** that slide within groove **191** to and thus rotationally links the motor's axle with the engagement element. Consequently, rotation of the motor initially strains spring **175** and release of this strain, then induces a rotational force on the engagement element causing its rotation. The rotation of motor-coupled member **181** bears on one of the blocks **167** (depending on the direction of

rotation) via a pin integral with member **181** (not seen and being in a rest state opposite pin **189** that is integral with engaging element **122**) to thereby strain the spring that causes the other of blocks **167** to exert rotational force on pin **189** to thereby rotate the engagement element **122**.

Figs. 4A and 4B also illustrate some other elements of the lock. In particular, what can be seen is block **137** accommodated within cylinder **104** which can axially rotate within the cylinder. Block **137** is rotationally coupled to cam **106** and consequently both jointly rotate. Block **137** is coupled at its rear end by means of radial screws **180** to the internal user accessible unit **108** and thus rotation of unit **108** will cause rotation of the cam. In this manner, internal user accessible unit **108** is permanently rotationally coupled to the cam.

Also seen in Figs. 4A and 4B are hard balls **184** that are accommodated within spaces defined in member **162**, their function being to inhibit tampering of the lock by axial drilling.

The operation of a pressure-activated lock according to an embodiment of this disclosure will now be described with reference to Figs. 6A-8B. Many of the elements in the lock of this embodiment are functionally similar and, at times, structurally identical to elements in the lock of the rotation-activated lock embodiment described above. Accordingly, as already noted above, like elements have been given like reference numerals shifted by a 1000. These like elements will not be described again and description of this embodiment will focus on the unique features in comparison to the rotation-activated lock embodiment.

The main functional difference, as already seen in Figs. 2A and 2B, resides in the user accessible unit **1300** that has the features already described.

In this embodiment, axial rear-ward pressing in the direction of arrow **1320** (Fig. 6A) causes slight displacement of plunger **1130**. Plunger **1130** has an arresting member **1322** with a rear face **1323** that bears against lever **1128** of micro-switch **1126**. The rearward displacement of plunger **1130** through pressing on unit **1300**, thereby activates the micro-switch which this activates the electronic utility. From here, the operation is similar to that described above: the activation of the electronic utility, lead by activation of micro-switch **1126** causes the electronic utility to send a wireless, typically encrypted signal to the user device, and a response signal from the device, also typically

encrypted, then activates the electro-mechanical system and consequently the plunger is released.

Here another difference between the two embodiments can be seen. The plunger **1130** has a rear part **1324** with a relatively narrow cross-section and can pass entirely through bore portion **1328**. Consequently the plunger can be axially displaced by the bias of spring **1144**, a distance defined between the shoulders **1325** of member **1322** and step **1326** at the front end of bore **1328**; the forward displacement being arrested when shoulders **1325** engage step **1326**. This distance is that required to bring to full extension of unit **1300** from its retracted position seen in Figs. 6A, 7A and 8A, to the extended position seen in Figs. 6B, 7B and 8B.

At the most extended position of plunger **1130** portion **1154**, which is forward to the plunger shoulders **1148**, similar to portion **154** of the rotation-activated lock described above, fits into bore **1158** to thereby rotationally couple unit **1300** with the cam.

Figs. 8A and 8B are included primarily to show two features: one being pins **1316**, already noted above; and the other being for illustration of the structure and function of wings **1306**, **1308**. Both wings are fitted within a vertical bore with substantially rectangular cross-section and are biased by respective springs **1332**, **1334** to deploy into their open state shown in Fig. 8B. When unit **1300** is retracted within bore **1302**, these are kept in the closed position, seen in Fig. 8A, by the walls of the bore. Once unit **1300** extends out of the bore, the wings radially deploy into their open state, this radial deployment being limited by means of respective pins **1336**, **1338**.

For locking of the pressure-activated lock, unit **1300** needs to be pushed back into to assume its retraced state within bore **1302**, after user presses wings **1306**, **1308** until their upper end is flush with the external face of unit **1300**. Upon such retraction, rear face **1323** of member **1322** engages lever **1128** of micro-switch **1126** to thereby cause the activation of the motor **1116** to rotate the mechanical assembly **1120** in the opposite direction back into the state shown in Figs. 6A, 7A, 8A to thereby lock the lock.

The electric and electronic elements of the system to operate the lock, according to the invention, are illustrated in the block diagram of Fig. 9A. These elements are common to both the rotation-activated lock embodiment and the pressure-activated lock embodiment and thus, in order not limit the following description to one of these

embodiments a different set of numerals has been used. It should be noted that internal user-accessible unit **108** and **1108** may in fact be identical and hence adapted for functional coupling with the different lock mechanism of the rotation- and pressure-activated lock embodiments.

These elements include electronic utility **2112** that comprises a micro-switch **2126**, processor **2400**, transceiver **2500**, and motor driver module **2600**. The electric sub-assembly includes a battery **2114** and an electric motor **2120**. Battery **2114** powers both electric motor and the electronic utility. The system also includes a user device **3000** with incorporated software utility **3100** that is configured to receive a lock-specific code and transmit a lock-activation code in response thereto via transceiver **3200**. Through motor driver module **2600**, the electronic utility can induce the motor to operate in either an opening rotation or a locking rotation direction.

The sequence of operation for opening the lock will now be described with reference to Fig. 9B. The sequence is similar to both the rotation- and pressure-activated lock embodiments and will be jointly described; and where differences exist, these will be pointed out.

The first step **4000** is one in which the electronic utility **2112** is activated through displacement of micro-switch **2126**. This is achieved by turning the external user-accessible unit **102** in the case of the rotation-activated embodiment, or through pressing the external user-accessible unit **1300** of the pressure-activated embodiment. This then, at **4100**, causes activation of the electronic utility **2112**, which then through the transceiver module **2500** sends at **4200** a first encrypted signal intended to be received by the user device **3000**. The user device then, at **4300**, receives the first signal and the application **3100** running in said device decrypts the data signal and then, at **4400**, sends a second, encrypted lock-activation signal to the electronic utility **2112**, which is then, at **4500**, received by the electronic utility **2112** and decrypted within processor **2400**. Upon receipt of the properly encrypted second signal the electronic utility, at **4600**, activates motor **2120** via motor driver module **2600**. This, at **4700**, causes the motor to rotate and thereby causing rotation of the engagement element **120**,**1120** and consequently, at **4800**, the plunger is released. Finally, at **4900**, the external user-accessible unit **102**,**1300**, can be rotated to open the lock.

The electronic utility typically also includes sensors that are adapted to provide indication on the lock status. This may include a sensor, such as sensors **200** and **1200**,

which may, for example, be X-Y-Z accelerometers that can provide an indication on the status of the engagement element, as well as other elements.

By some embodiments, the application utility **3100** operating in the user device **3000** can also provide the user with an indication of the lock status, and particularly alert the user in the event the lock has not been locked.

CLAIMS:

1. A lock comprising

a user accessible unit for opening the lock,

an electronic utility that is configured for wirelessly pairing with a user device for switching the lock from a locked to an open state, and

an electromechanical assembly for switching the lock from a locked to an open state,

wherein the user accessible unit is configured for operation in a two-stage process, of which the first stage activates the electronic utility to thereby pair with a user device and the second stage, seamlessly continuous with the first stage, opening the lock in the presence of an authorized user device.

2. A lock comprising

an external user-accessible unit for operation of the lock by a user;

a lock mechanism that comprises a locking element that may be coupled to said unit;

an electromechanical engagement assembly with an electric sub-assembly that drives a mechanical sub-assembly that is adapted to engage the lock mechanism or an element thereof to thereby block coupling of said unit with locking element;

an electronic utility electrically coupled to said electric sub-assembly comprising a trigger element, and configured for (i) wireless pairing with an authorized user device and (ii) to issue, upon pairing, a lock-activation signal to activate said electric sub-assembly to thereby drive the mechanical sub-assembly to couple the external user-accessible unit with the locking element;

the user-accessible unit being (i) operable by a user to open the lock, (ii) coupled to the trigger element such that a first stage of the operation actuates the trigger element, and being (iii) capable of coupling to the locking element upon activation of the electric sub-assembly.

3. The lock of claim 2, wherein upon said pairing said electronic utility activates the electric sub-assembly to drive the mechanical sub-assembly to thereby disengage an engaged lock mechanism or an engaged element thereof, the disengagement couples said external user-accessible unit with said locking element such that a second stage of operation of said user-accessible unit opens the lock.

4. The lock of claim 2 or 3, wherein said pairing comprising an exchange of encrypted signals.

5. The lock of claim 4, wherein the electronic utility comprises one or both of (i) a signal encoding module for encoding one or more first signals wirelessly transmitted by said electronic utility and (ii) a signal decoding module for decoding one or more second signals to be received from a user device.

6. The lock of any one of the preceding claims, wherein the electronic utility comprises a wireless transceiver.

7. The lock of any one of the preceding claims, wherein the paring is carried out using Bluetooth communication protocol.

8. The lock of any one of the preceding claims, wherein the user device is a mobile communication device, e.g. a smartphone.

9. The lock of any one of claims 2-8, wherein the electric sub-assembly comprises a solenoid, an electric motor or a piezoelectric element.

10. The lock of any one of the preceding claims 2-9, wherein the trigger element is a micro-switch.

11. The lock of any one of claims 2-10, wherein said engagement system engages an element of the lock mechanism and releases the element upon activation that consequently displaces to couple the external user-accessible member with the locking element.

12. The lock of any one of claims 2-11, wherein the coupling of the external user-accessible unit and the locking element is rotational.

13. The lock of any one of claims 2-12, wherein said external user-accessible unit is at an exterior lock end, and the lock comprising an internal user-accessible unit at the interior lock end.

14. The lock of claim 13, wherein the electromechanical assembly and the electronic utility are housed within said internal user-accessible unit.

15. The lock of claim 13 or 14, wherein the lock mechanism comprises

a plunger extending internally along an axis within the lock between the external and internal user-accessible units and having a first end proximal said external user-accessible unit and second end proximal said internal user-accessible unit;

the plunger being axially displaceable between a reward state in which its second end is engaged by an engagement element of the mechanical sub-assembly, and

being biased into a forward state in which it couples the external user-accessible unit to the locking element.

16. The lock of claim 15, wherein the engagement element is revolvable by an electric motor of the electric sub-assembly that revolves said element between an engaging state, in which it engages the second plunger end and a releasing state in which it permits the plunger's displacement to its forward state.

17. The lock of claim 15 or 16, wherein said plunger rotationally engages the external user-accessible unit upon axial displacement to its forward state, to thereby rotationally couple said unit with the locking element.

18. The lock of any one of claims 2-17, wherein the external user-accessible unit comprises a knob or handle and the operation to activate the lock comprises rotational movement of said unit.

19. The lock of any one of claims 2-18, wherein the external user-accessible unit is a retractable-extendible unit, e.g. in the form of a handle or knob that (i) can be pressed to activate the signal-transmitting module, and (ii) extends, upon receipt of the lock activation signal by the electronic utility to permit user operation for opening the lock.

20. The lock of claim 19, comprising a knob that can axially reciprocate between a retraced state in which it is accommodated within a recess from within the lock and an extended state in which is extends out of said recess and accessible to a user; the knob being displaced into the extended state by the displacement of said plunger into its forward state.

21. A system comprising (i) a lock according to any one of the preceding claims; and (ii) a user device containing application software that can configure the device for pairing.

22. The system of claim 21, wherein the user device is a mobile communication device, e.g. a smartphone.

23. A lock comprising a user-accessible unit for opening the lock through axial rotation, wherein

said unit having a retracted state in which it is accommodated within an axial recess in the lock's body and an extended state, and being axially displaceable between the two states; and

comprising a pair of wings that have a housed state, in which they are housed within a radial bore and have a deployed state in which they extend radially in opposite radial directions out of the bore and being biased into the deployed state.

24. The lock of claim 23, wherein displacing the user-accessible unit into the deployed state comprise axially pushing said unit in the opposite axial direction and releasing.

25. The lock of claim 24, wherein said lock comprises an electromechanical assembly and an electronic command utility coupled thereto and the axial pushing cause the triggering of the electronic utility, whereby the electromechanical assembly is activated to cause said unit displace into the extended state.

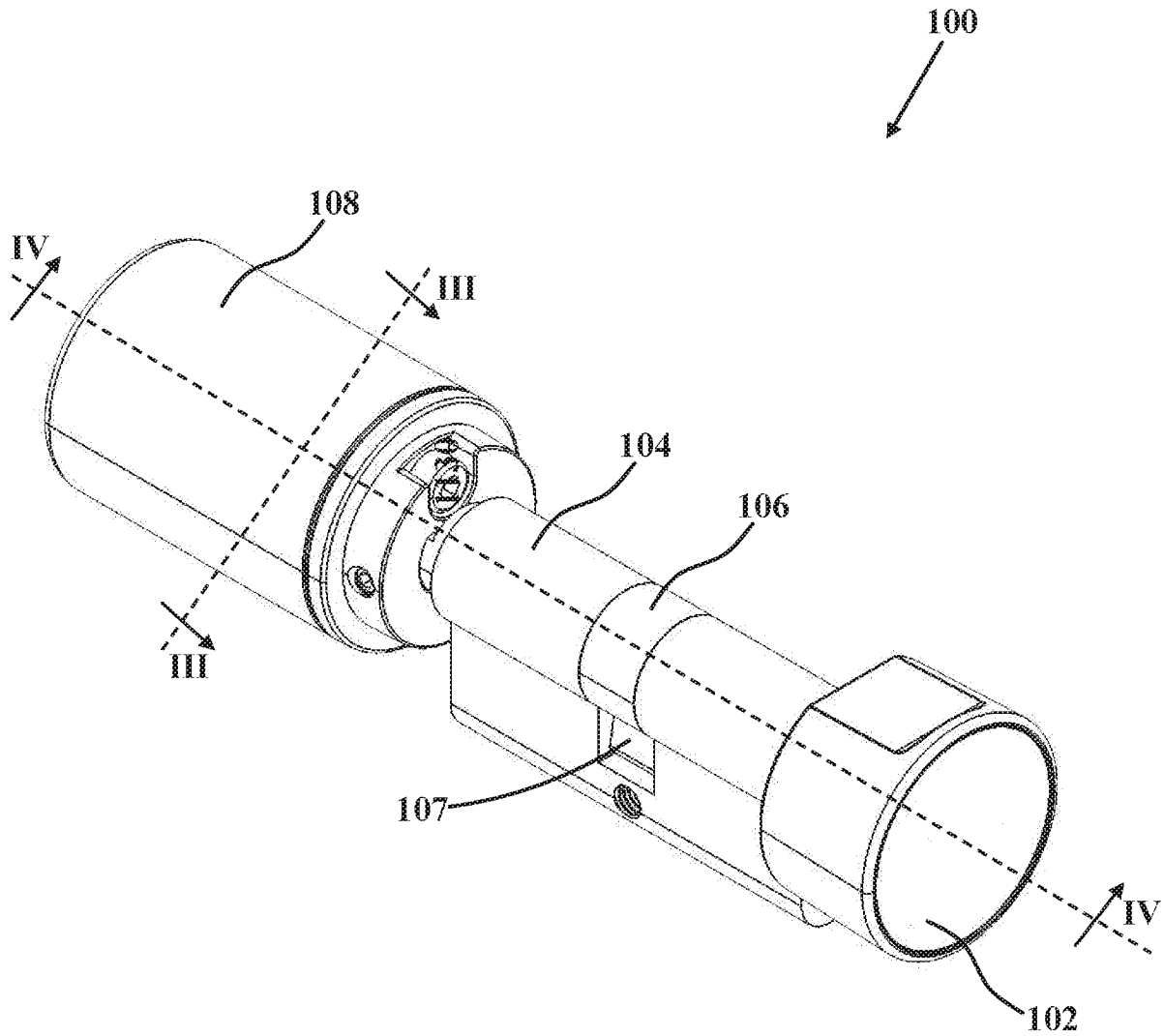

Fig. 1

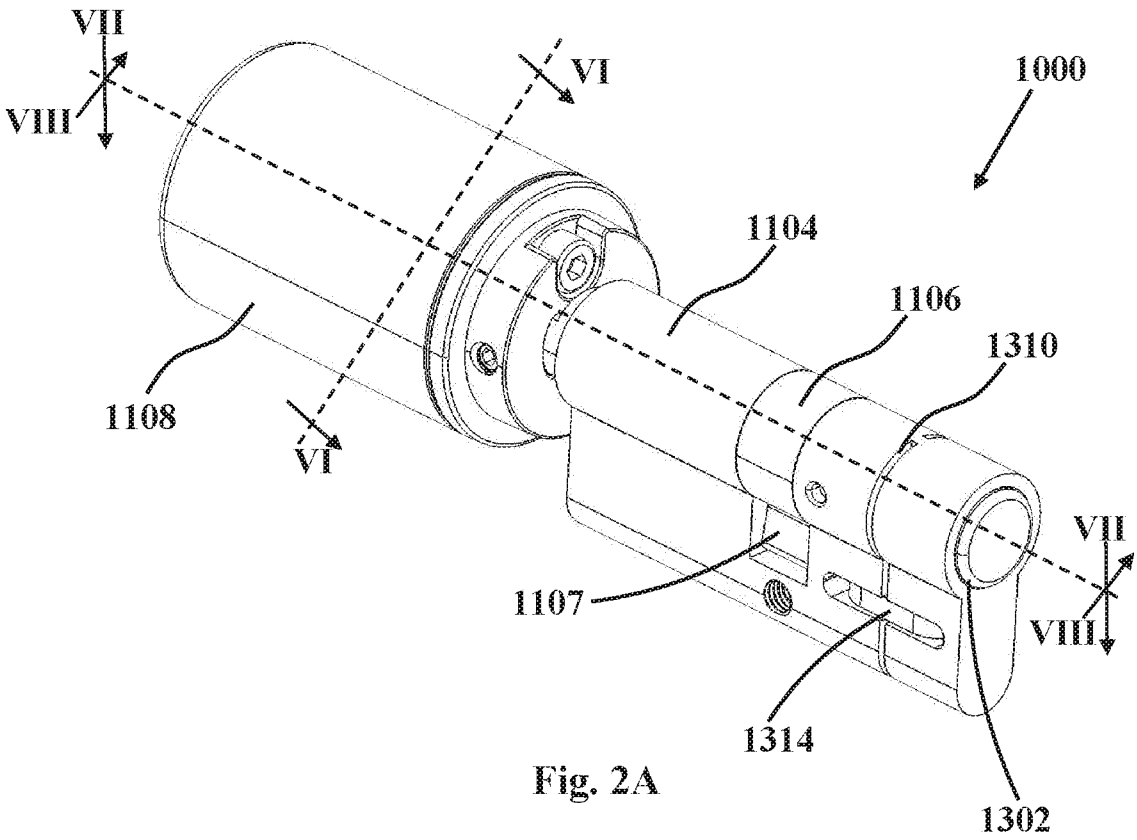
VII
VIII
VI
1000
1104
1106
1310
1108
VI
VII
VIII
1107
1314
1302

Fig. 2A

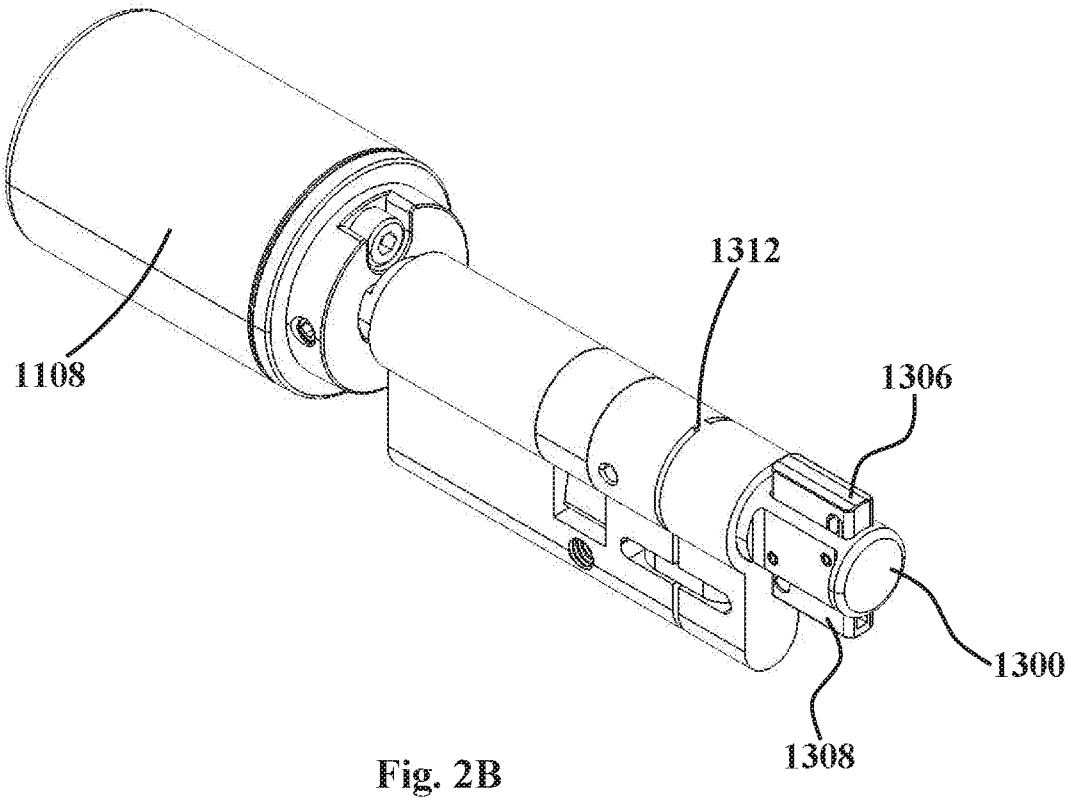
1312
1108
1306
1300
1308

Fig. 2B

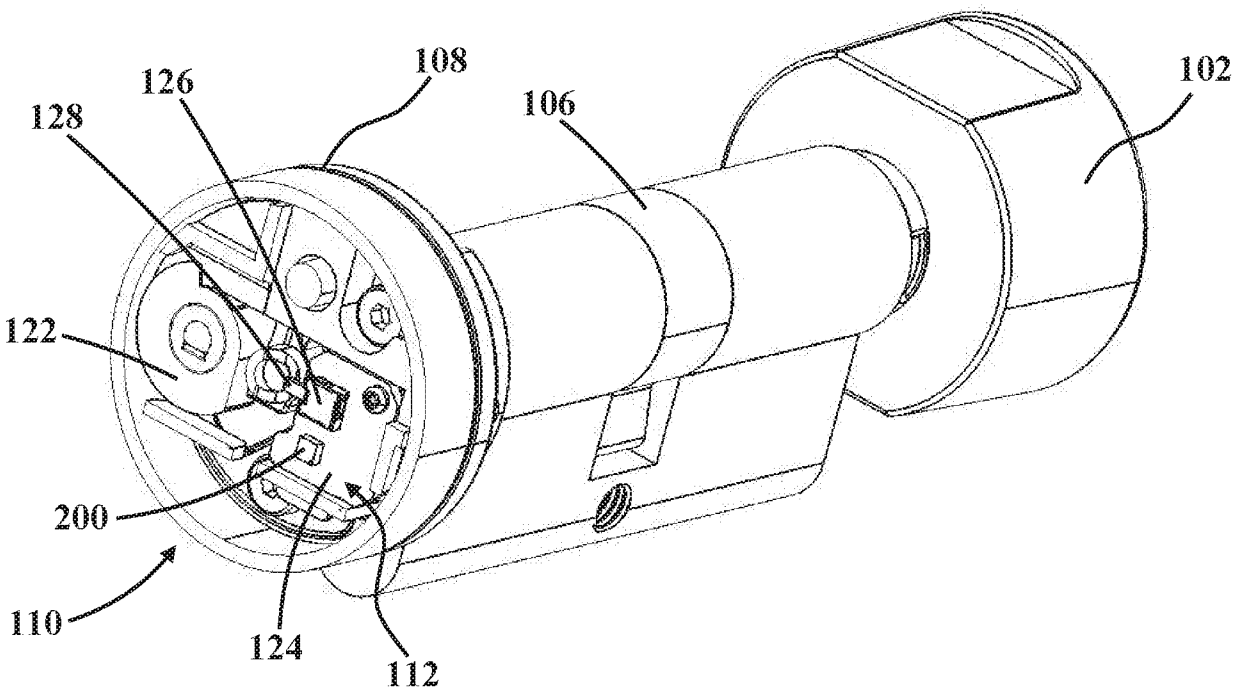

Fig. 3A

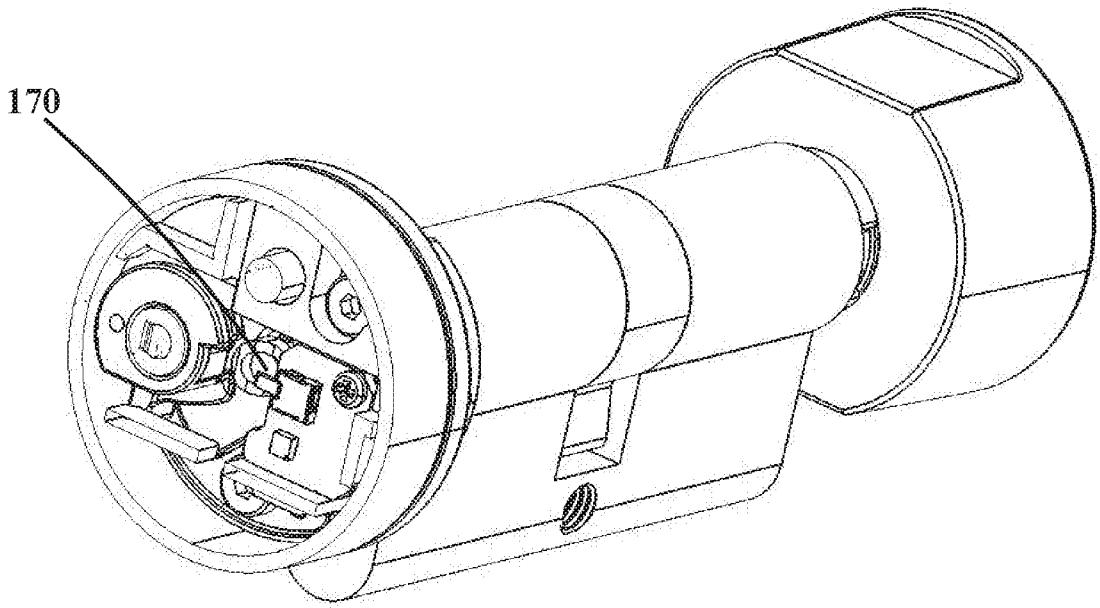

Fig. 3B

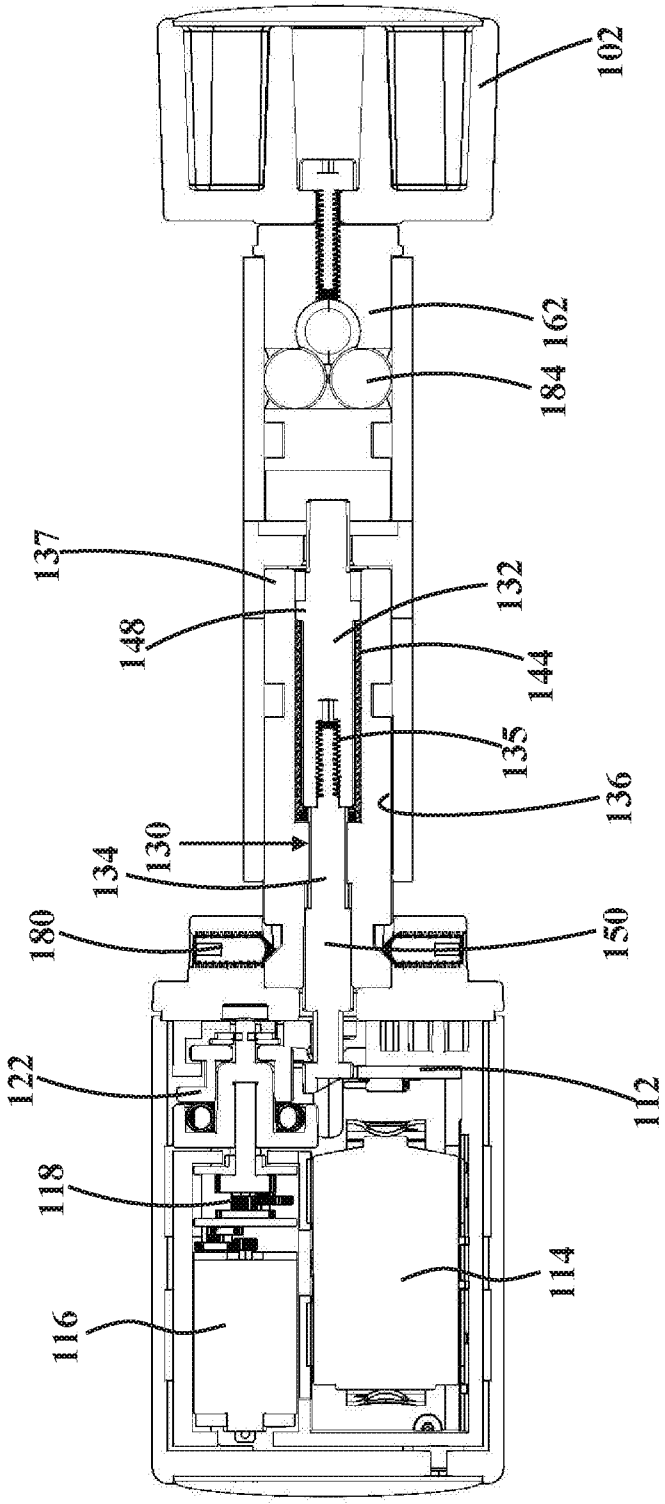
102
162
184
137
132
148
144
135
136
130
134
180
150
122
112
118
114
116

Fig. 4A

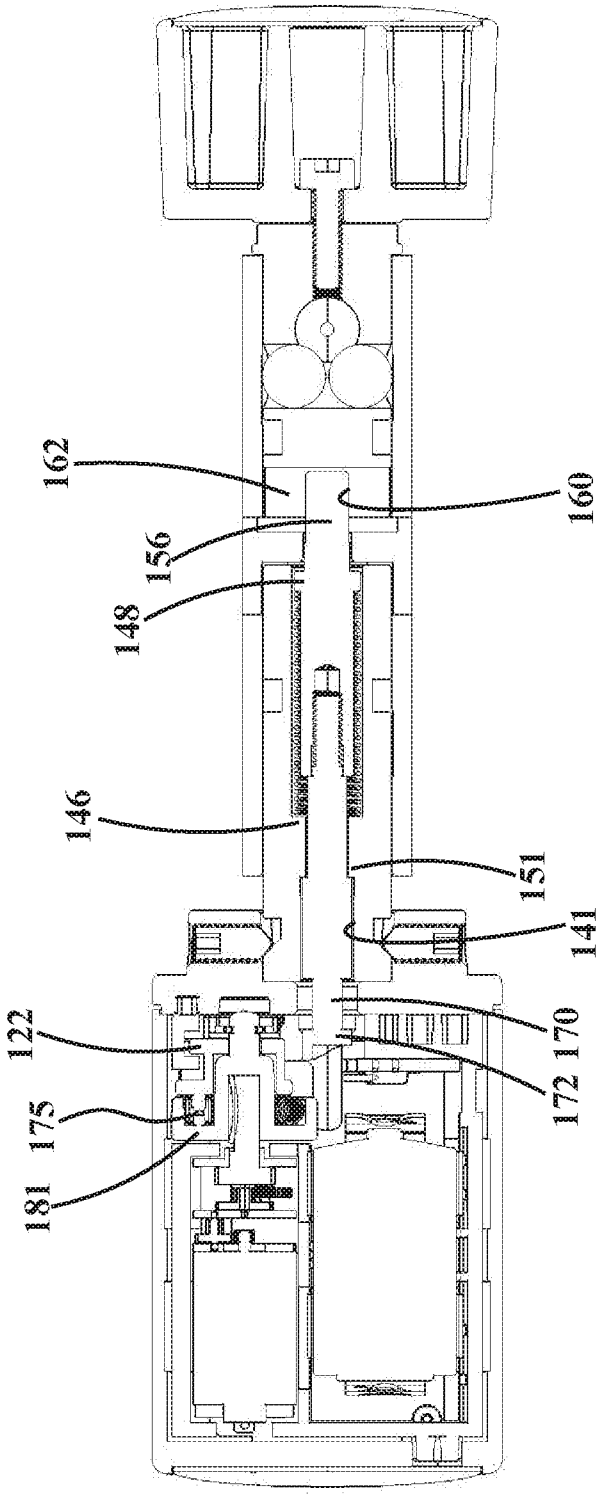

Fig. 4B

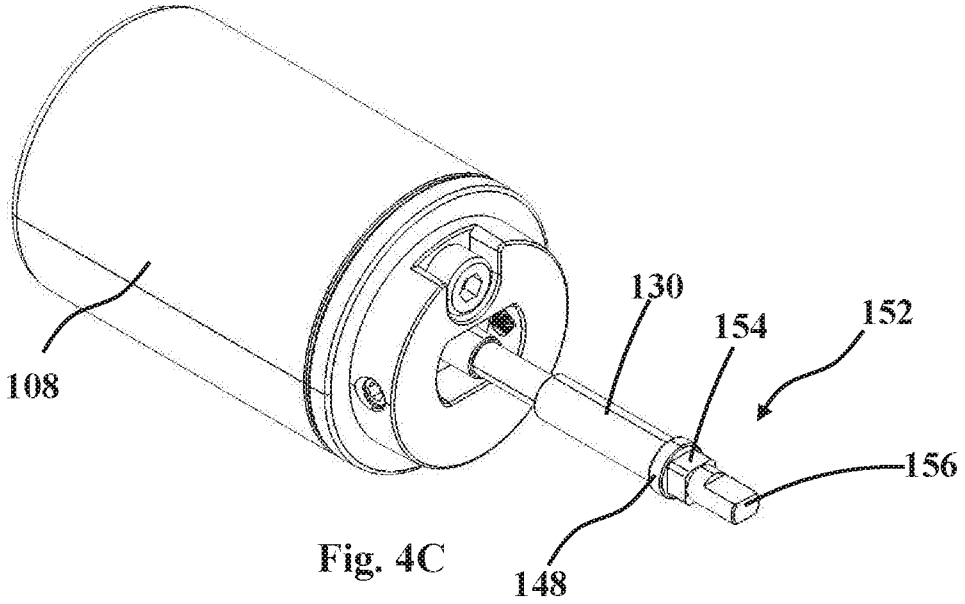

Fig. 4C

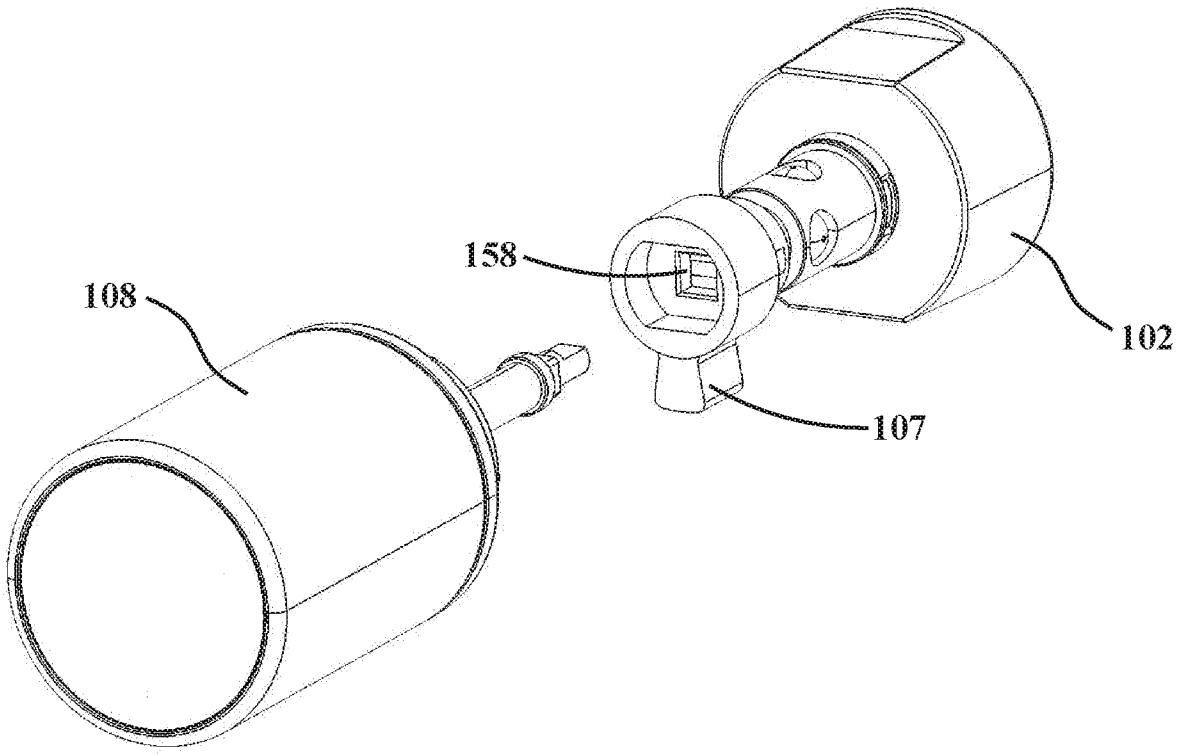

Fig. 4D

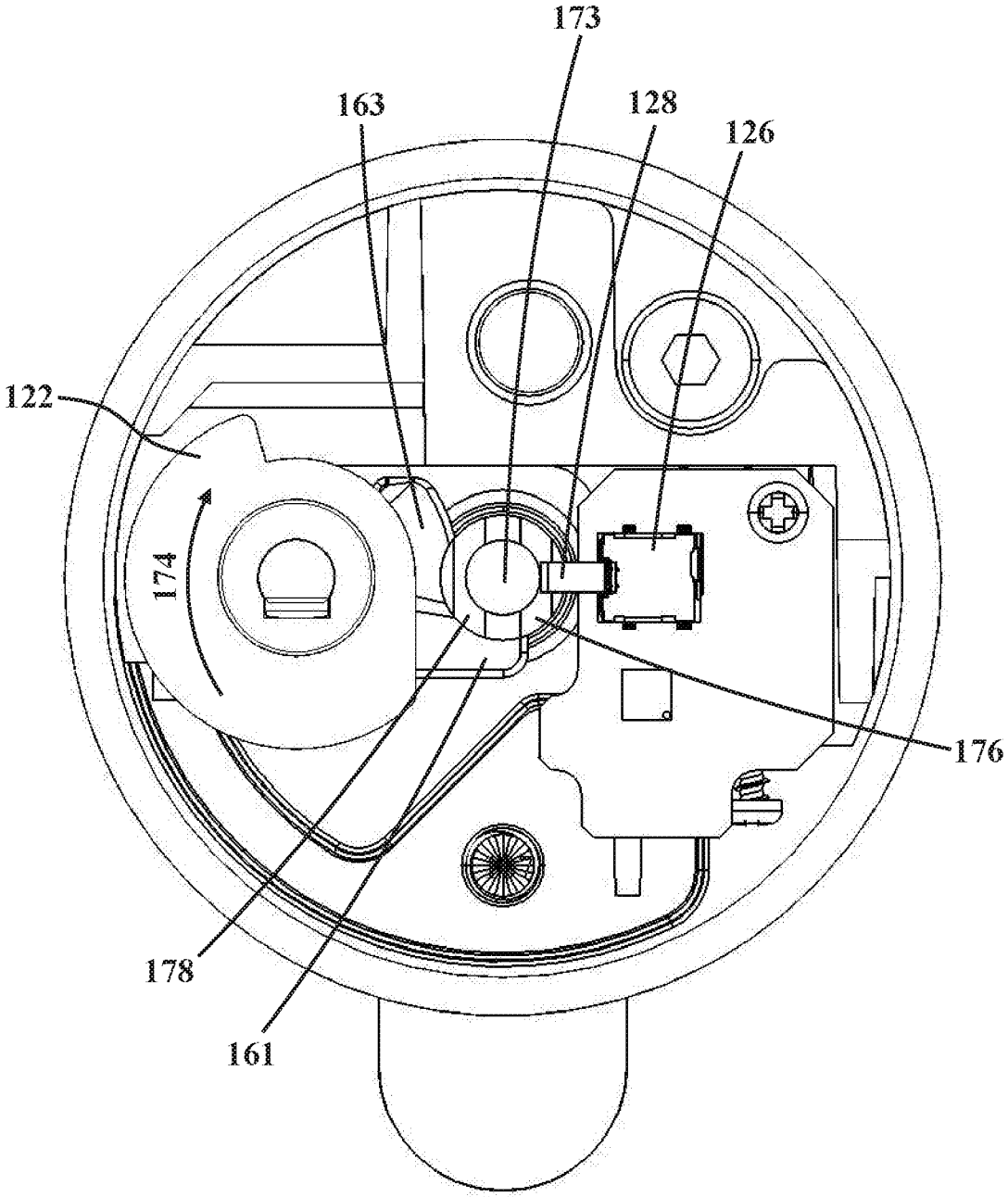

Fig. 5A

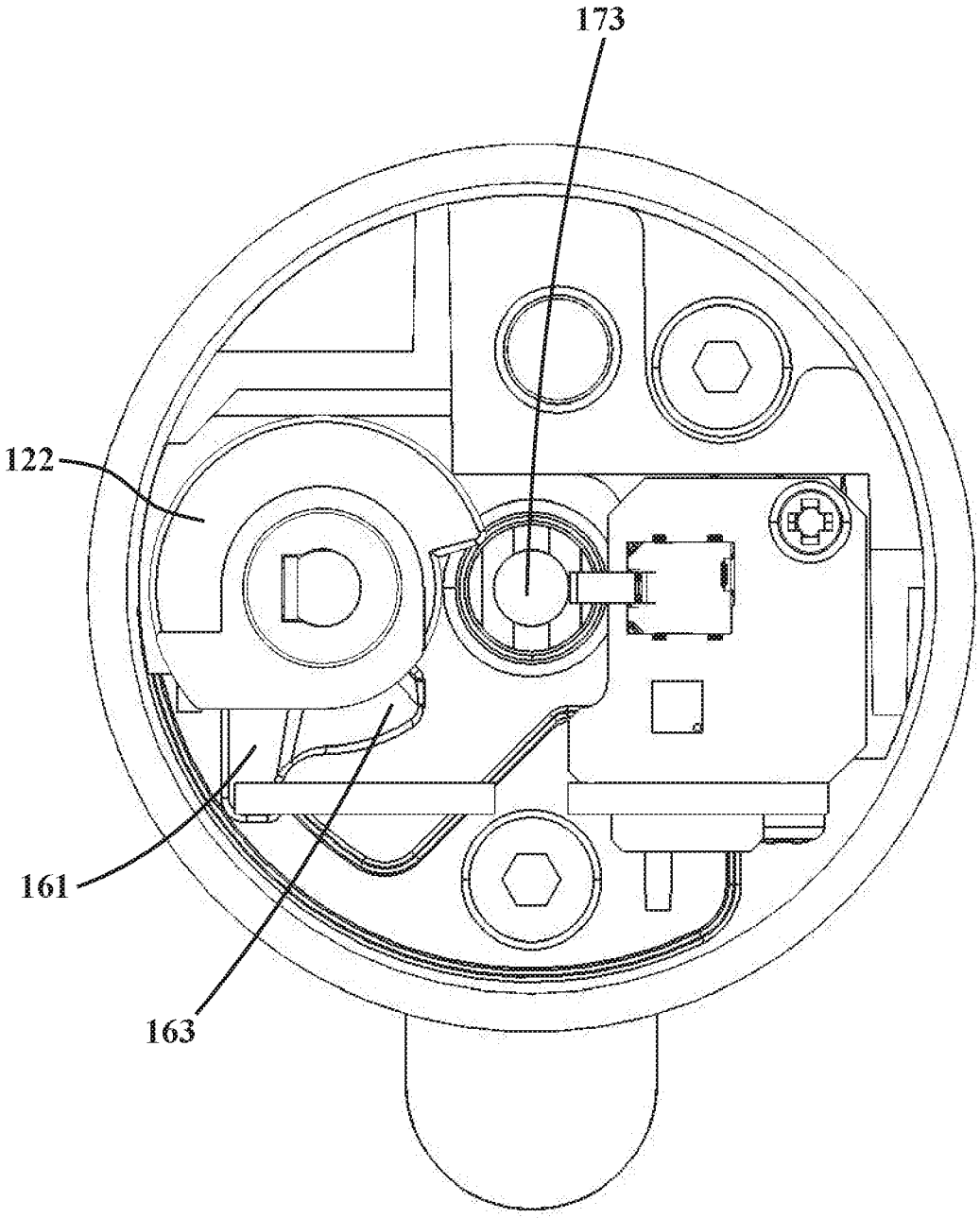

Fig. 5B

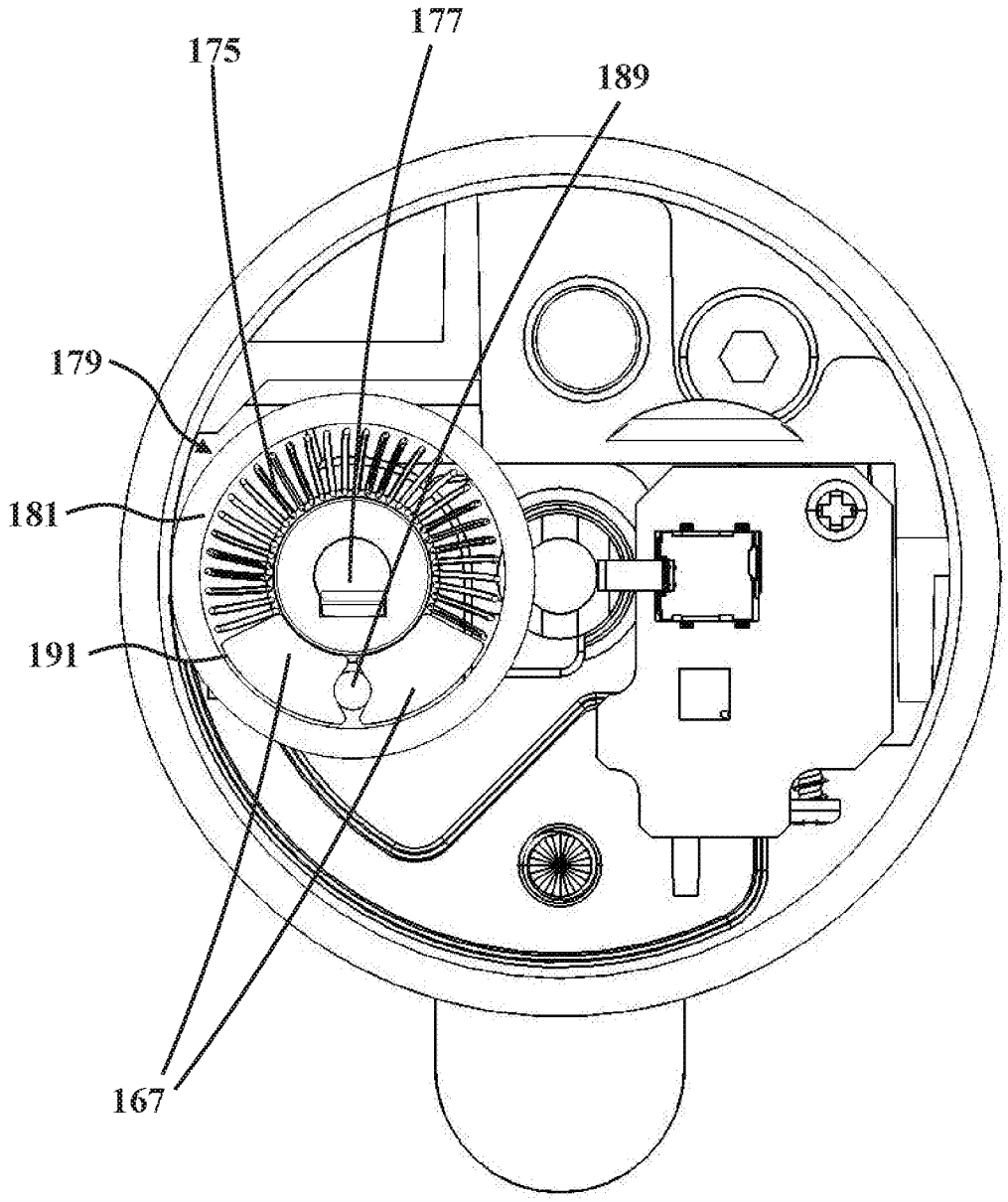

Fig. 5C

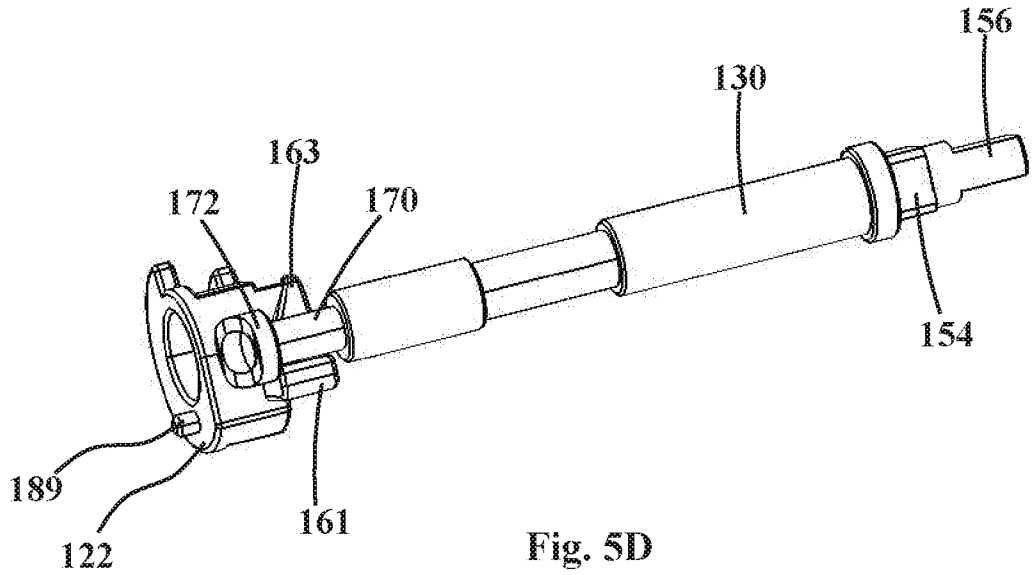

Fig. 5D

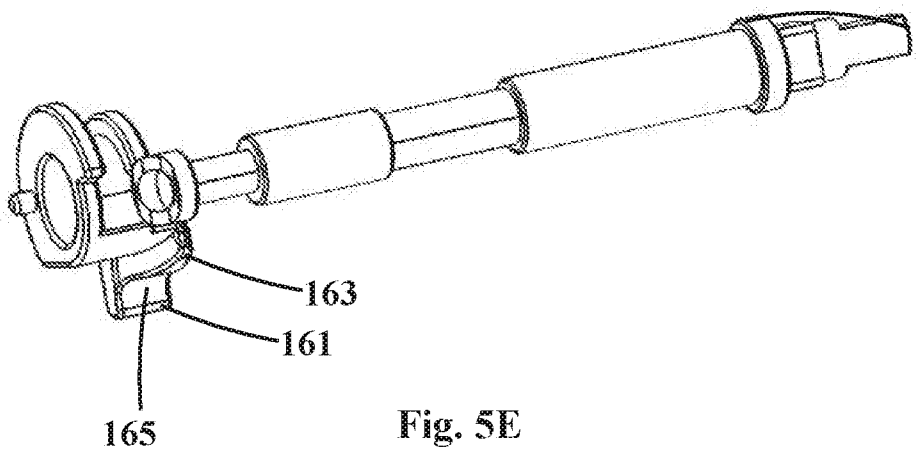

Fig. 5E

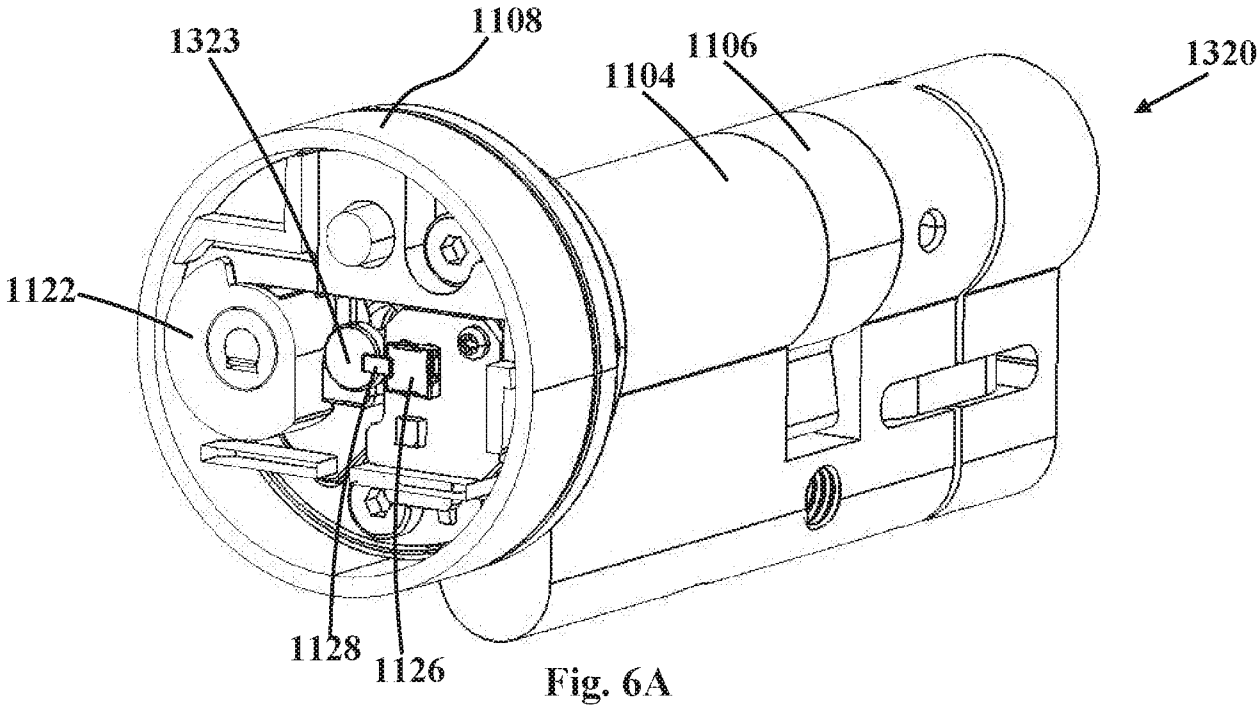

Fig. 6A

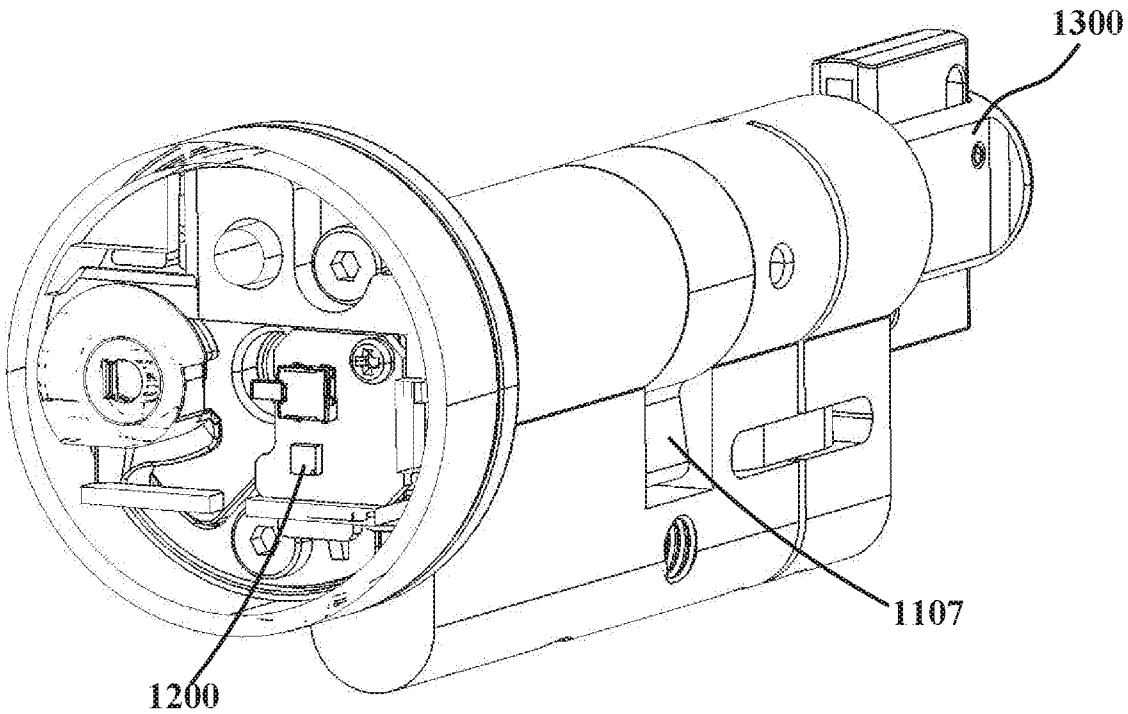

Fig. 6B

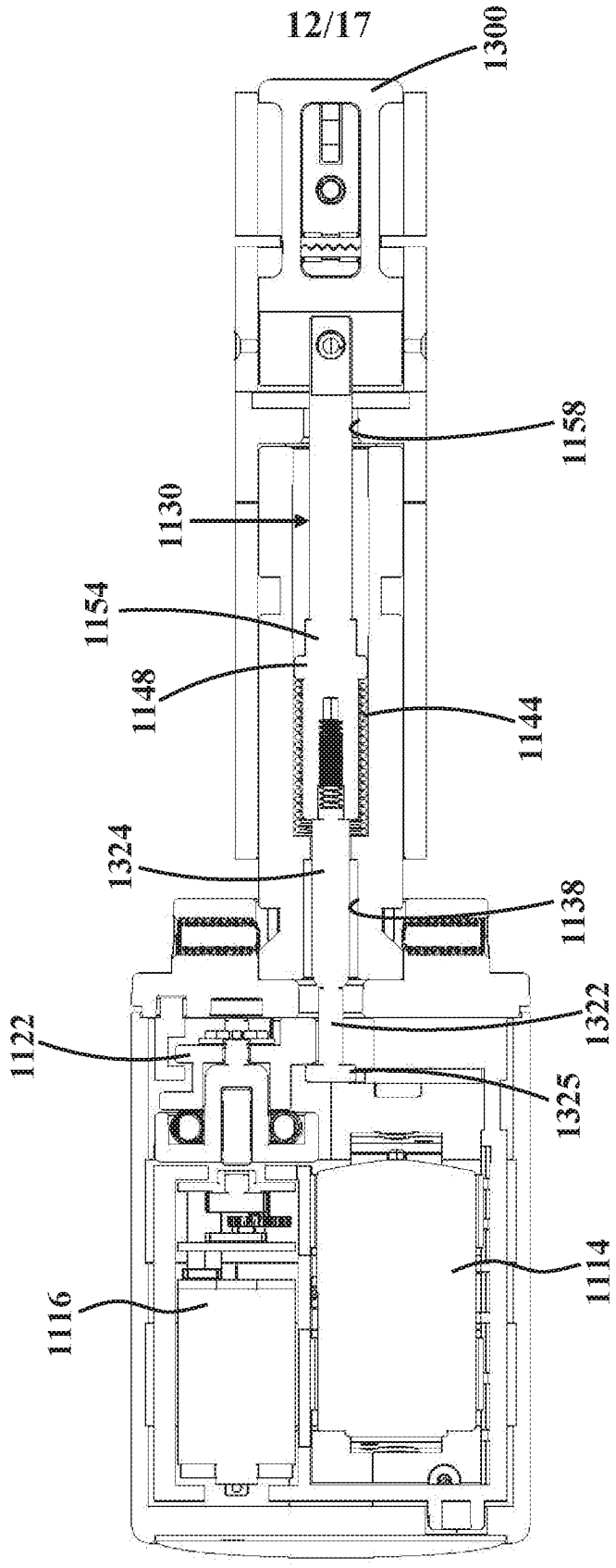
1300
1158
1130
1154
1148
1144
1324
1138
1322
1122
1325
1114
1116

Fig. 7A

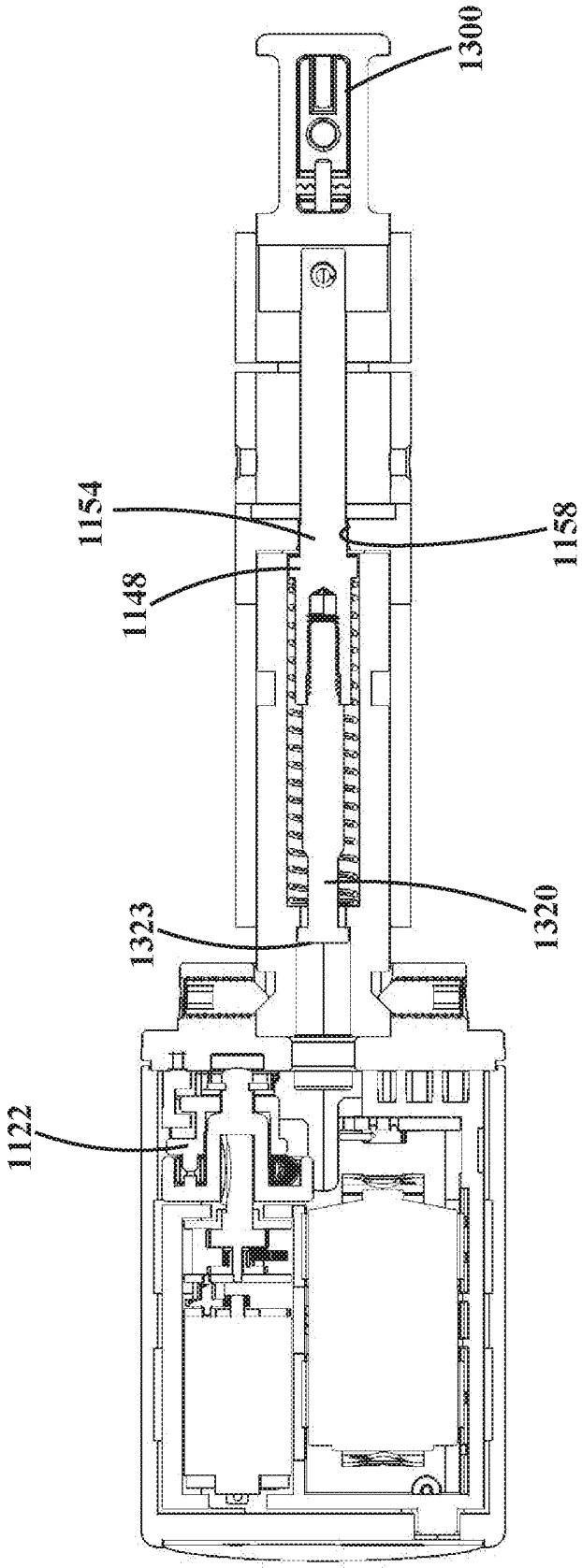

Fig. 7B

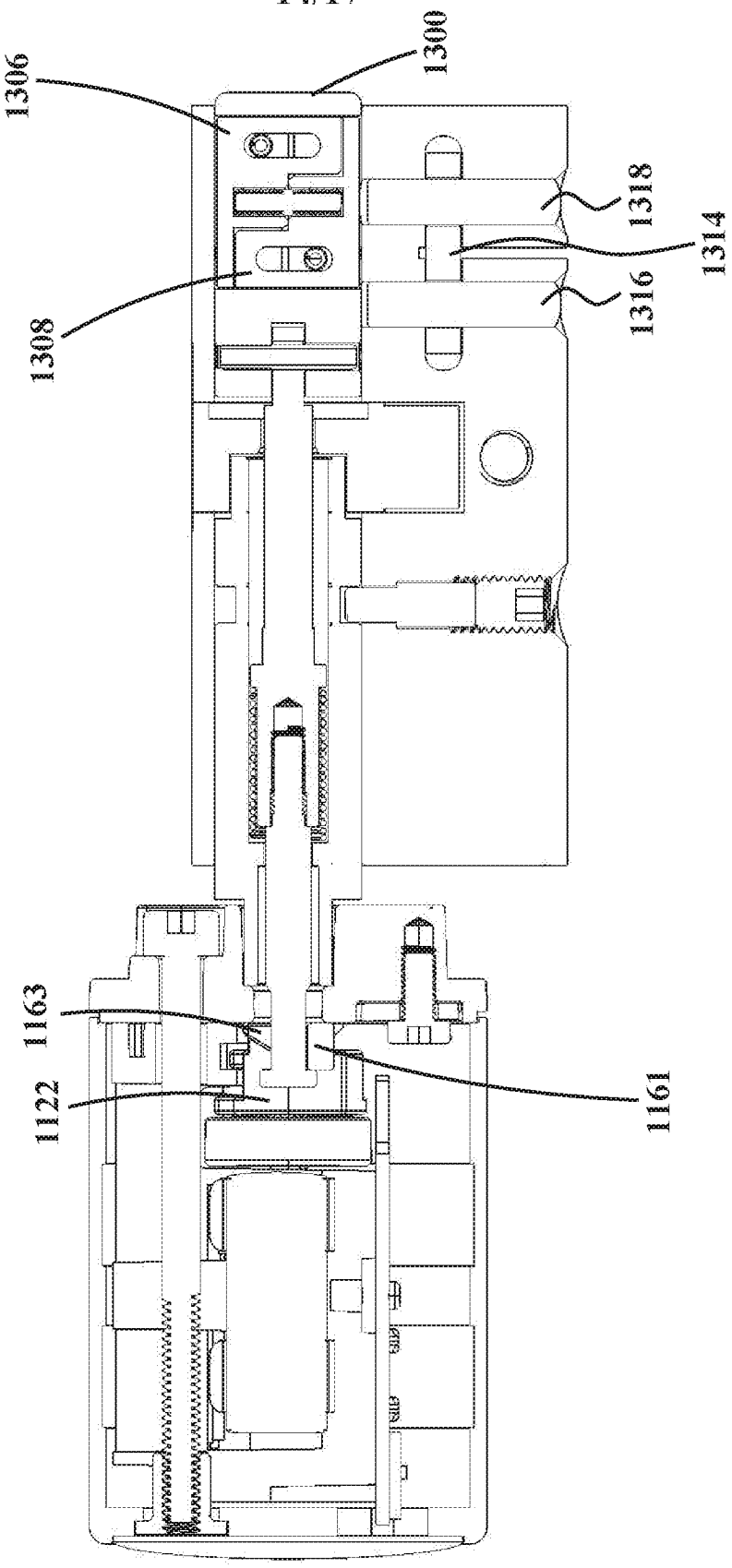

Fig. 8A

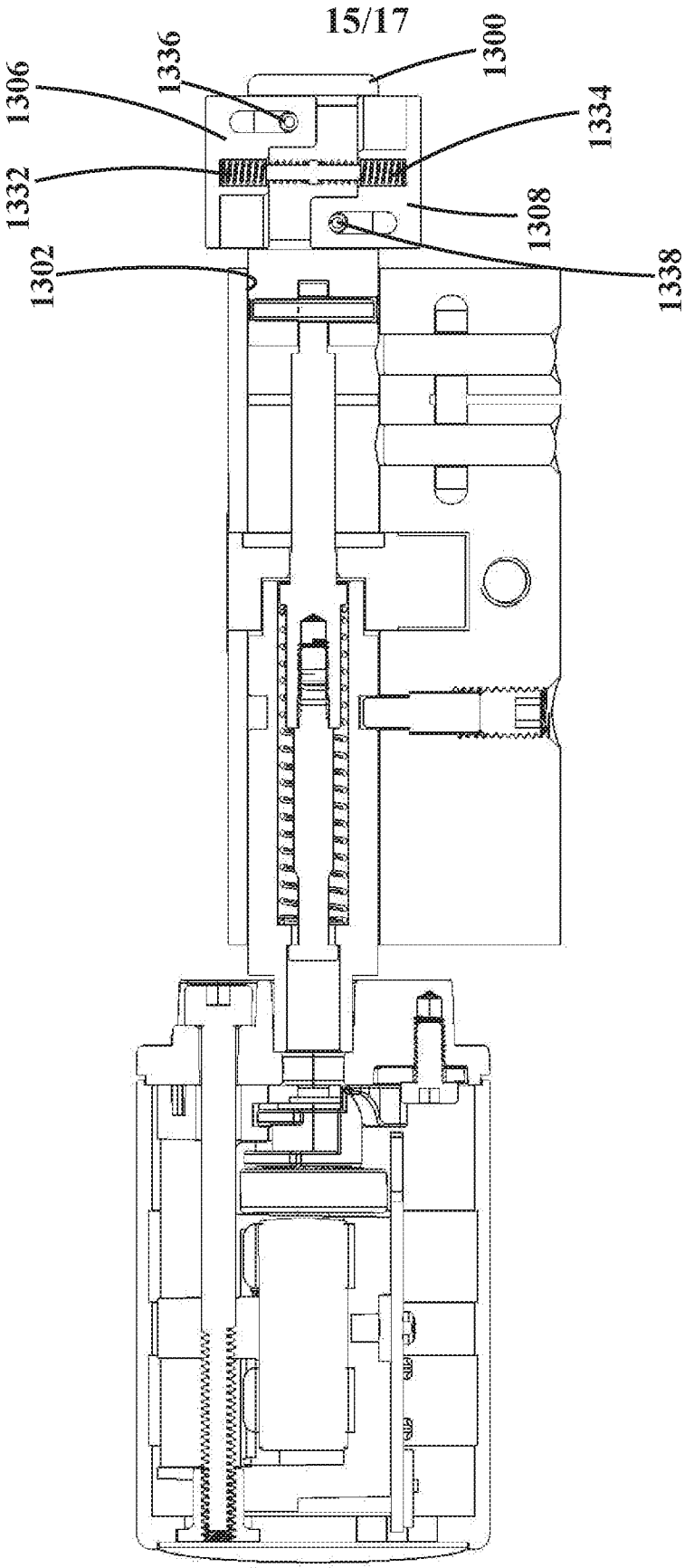

Fig. 8B

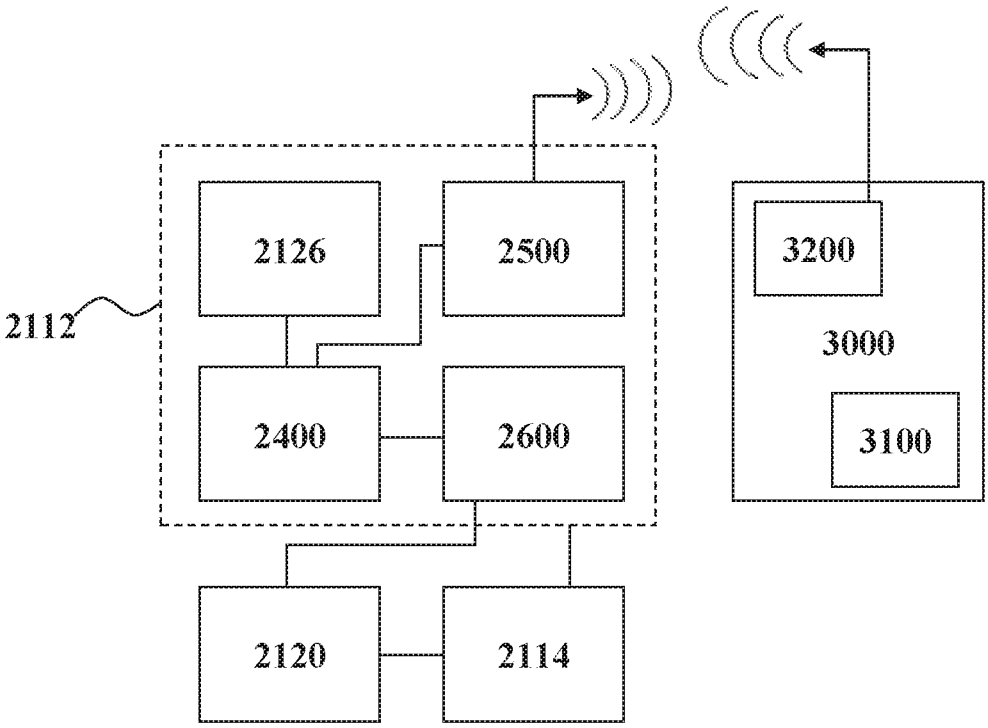

Fig. 9A

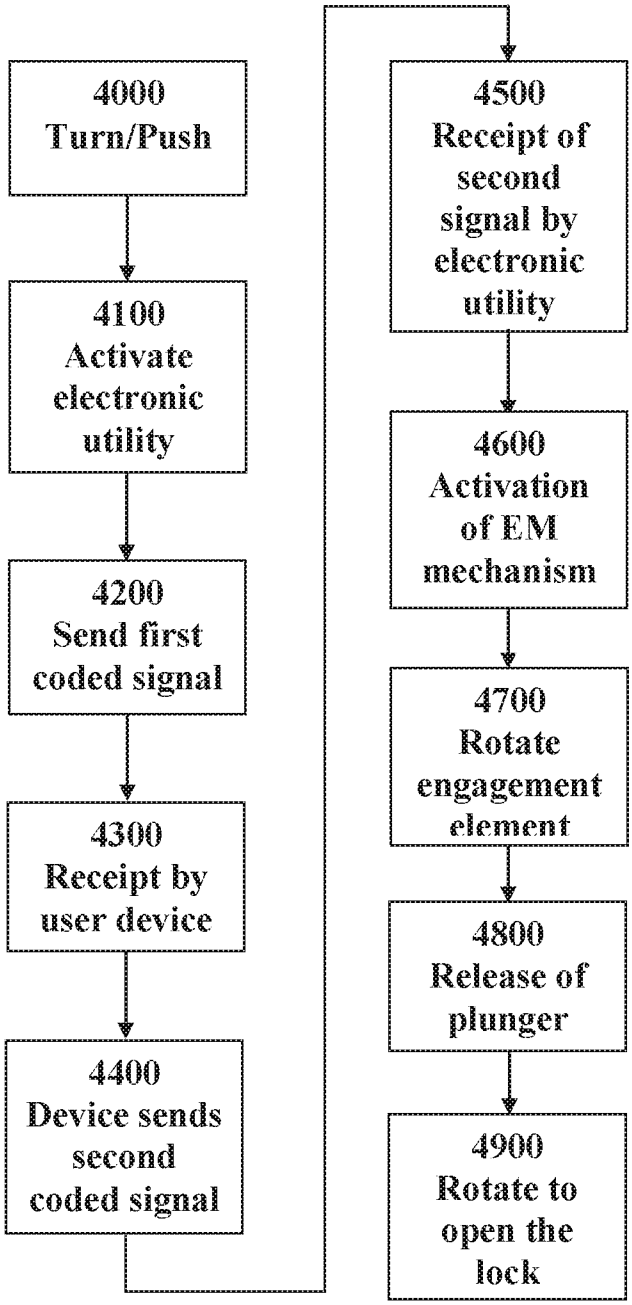
4000
Turn/Push
4100
Activate electronic utility
4200
Send first coded signal
4300
Receipt by user device
4400
Device sends second coded signal
4500
Receipt of second signal by electronic utility
4600
Activation of EM mechanism
4700
Rotate engagement element
4800
Release of plunger
4900
Rotate to open the lock

Fig. 9B

INTERNATIONAL SEARCH REPORT

International application No.
PCT/IL2015/050455

A. CLASSIFICATION OF SUBJECT MATTER
IPC (2015.01) E05B 53/00

According to International Patent Classification (IPC) or to both national classification and IPC

B. FIELDS SEARCHED

Minimum documentation searched (classification system followed by classification symbols)
IPC (2015.01) E05B 53/00

Documentation searched other than minimum documentation to the extent that such documents are included in the fields searched

Electronic data base consulted during the international search (name of data base and, where practicable, search terms used)
Databases consulted: THOMSON INNOVATION

C. DOCUMENTS CONSIDERED TO BE RELEVANT

Category*	Citation of document, with indication, where appropriate, of the relevant passages	Relevant to claim No.
Y	GB 2353620 A BAYERISCHE MOTOREN WERKE AG 28 Feb 2001 (2001/02/28) the entire document	1,6-8,21,22
A	the entire document	2-5,9-20
Y	US 2010222940 A1 PUETSCH FELIX 02 Sep 2010 (2010/09/02) the entire document	1,6-8,21,22
A	the entire document	2-5,9-20

☐ Further documents are listed in the continuation of Box C.

☒ See patent family annex.

* Special categories of cited documents:
"A" document defining the general state of the art which is not considered to be of particular relevance
"E" earlier application or patent but published on or after the international filing date
"L" document which may throw doubts on priority claim(s) or which is cited to establish the publication date of another citation or other special reason (as specified)
"O" document referring to an oral disclosure, use, exhibition or other means
"P" document published prior to the international filing date but later than the priority date claimed

"T" later document published after the international filing date or priority date and not in conflict with the application but cited to understand the principle or theory underlying the invention
"X" document of particular relevance; the claimed invention cannot be considered novel or cannot be considered to involve an inventive step when the document is taken alone
"Y" document of particular relevance; the claimed invention cannot be considered to involve an inventive step when the document is combined with one or more other such documents, such combination being obvious to a person skilled in the art
"&" document member of the same patent family

Date of the actual completion of the international search	Date of mailing of the international search report
20 Sep 2015	07 Oct 2015
Name and mailing address of the ISA: Israel Patent Office Technology Park, Bldg.5, Malcha, Jerusalem, 9695101, Israel Facsimile No. 972-2-5651616	Authorized officer NARGASI Ayelet Telephone No. 972-2-5651620

INTERNATIONAL SEARCH REPORT

International application No.
PCT/IL2015/050455

Box No. III Observations where unity of invention is lacking (Continuation of item 3 of first sheet)

This International Searching Authority found multiple inventions in this international application, as follows:

See extra sheet.

1. ☐ As all required additional search fees were timely paid by the applicant, this international search report covers all searchable claims.

2. ☐ As all searchable claims could be searched without effort justifying additional fees, this Authority did not invite payment of additional fees.

3. ☐ As only some of the required additional search fees were timely paid by the applicant, this international search report covers only those claims for which fees were paid, specifically claims Nos.:

4. ☒ No required additional search fees were timely paid by the applicant. Consequently, this international search report is restricted to the invention first mentioned in the claims; it is covered by claims Nos.:
1-22

Remark on Protest

☐ The additional search fees were accompanied by the applicant's protest and, where applicable, the payment of a protest fee.

☐ The additional search fees were accompanied by the applicant's protest but the applicable protest fee was not paid within the time limit specified in the invitation.

☐ No protest accompanied the payment of additional search fees.

Box No. III Observations where unity of invention is lacking (Continuation of item 3 of first sheet):

* This International Searching Authority found multiple inventions in this international application, as follows:

Invention/s 1	A lock comprising a user accessible unit for opening the lock configured for operation in a two-stage process, of which the first stage activates the electronic utility to thereby wireless pair with a user device and the second stage, seamlessly continuous with the first stage, opening the lock in the presence of an authorized user device.	Claim/s 1-22
Invention/s 2	A lock comprising a user-accessible unit for opening the lock comprising a pair of wings that have a housed state, in which they are housed within a radial bore and have a deployed state in which they extend radially in opposite radial directions out of the bore and being biased into the deployed state.	Claim/s 23-25

INTERNATIONAL SEARCH REPORT
Information on patent family members

International application No.
PCT/IL2015/050455

Patent document cited search report	Publication date	Patent family member(s)	Publication Date
GB 2353620 A	28 Feb 2001	GB 9920190 D0	27 Oct 1999
		GB 2353620 A	28 Feb 2001
US 2010222940 A1	02 Sep 2010	US 2010222940 A1	02 Sep 2010
		CA 2696300 A1	23 Apr 2009
		CN 101785035 A	21 Jul 2010
		DE 102007048696 A1	30 Apr 2009
		EP 2198406 A1	23 Jun 2010
		JP 2011501791 A	13 Jan 2011
		KR 20100086460 A	30 Jul 2010
		KR 101160613 B1	28 Jun 2012
		MX 2010001479 A	01 Jun 2010
		WO 2009049693 A1	23 Apr 2009