Sept. 1, 1931. W. J. ZIMMERMAN 1,821,198

PAPER MANUFACTURE

Filed April 1, 1929

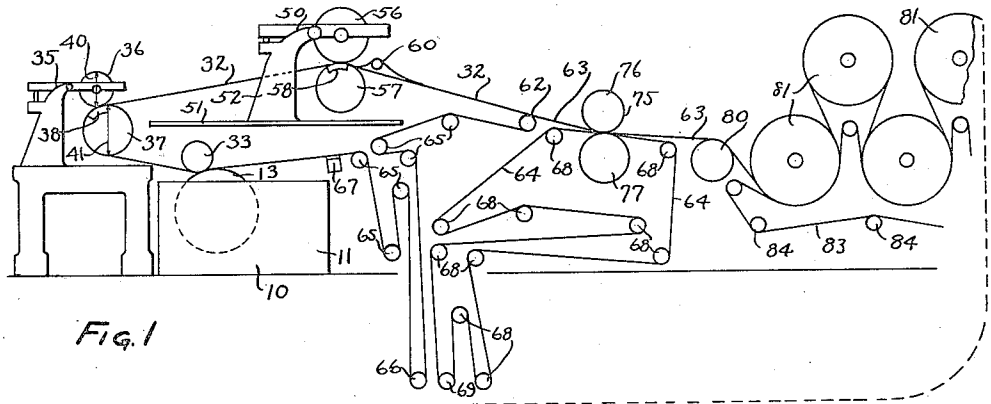

Fig. 1

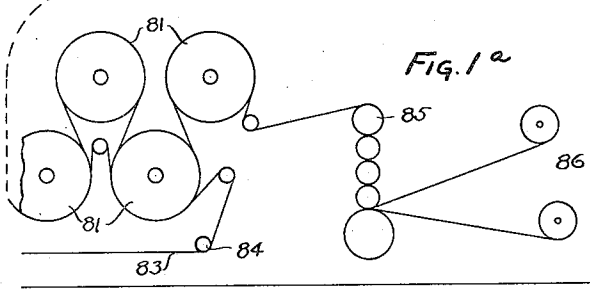

Fig. 1a

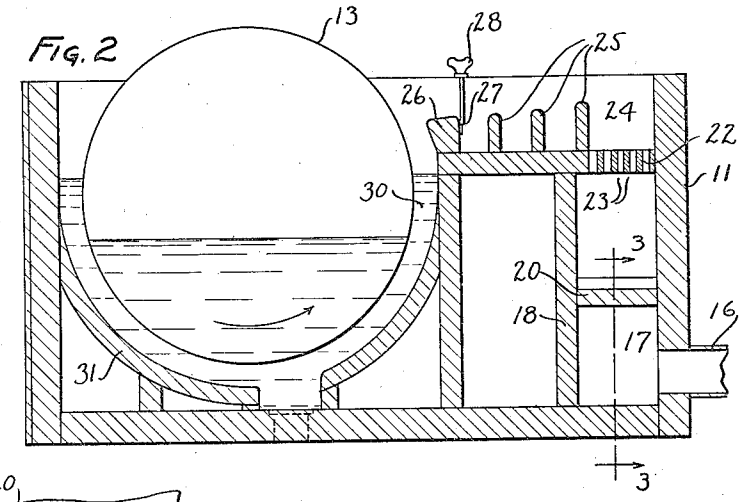

Fig. 2

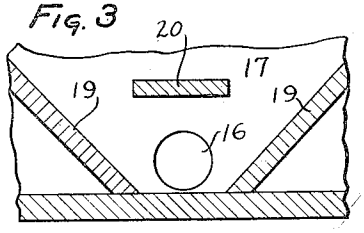

Fig. 3

INVENTOR

BY Walter J. Zimmerman

Maréchal and Noe

ATTORNEYS

Patented Sept. 1, 1931

1,821,198

UNITED STATES PATENT OFFICE

WALTER J. ZIMMERMAN, OF DAYTON, OHIO, ASSIGNOR TO MEAD PAPERBOARD CORPORATION, OF WILMINGTON, DELAWARE, A CORPORATION OF DELAWARE

PAPER MANUFACTURE

Application filed April 1, 1929. Serial No. 351,563.

This invention relates to the manufacture of paper, and particularly to the manufacture of the heavier grades of paper which are commonly designated as "board" and used for making containers, "corrugated board" and the like.

One of the principal objects of the invention is to provide a method for forming a satisfactory product from pulps which contain a large proportion of what may be called bonding materials holding the fibers together in a softened state, producing a natural size and a sticky wet pulp.

Another object of this invention is to provide a method for forming a satisfactory product from quick settling and channeling short fiber pulps, such as the pulp made from chestnut wood and the like.

Another object of this invention is to provide apparatus for carrying out the above method, which apparatus is simple in construction, functions to produce a sheet of good character at high speed, with minimized breakage and with resulting economy in manufacture and increased production.

Other objects and advantages of this invention will be apparent from the following description, the accompanying drawings and appended claims.

In the drawings in which like characters of reference designate like parts throughout the several views thereof;

Fig. 1 is a diagrammatic elevational view of a portion of the apparatus constructed in accordance with this invention;

Fig. 1ª is a diagrammatic elevational view of another portion of the apparatus; Figs. 1 and 1ª when placed end to end disclosing the complete apparatus;

Fig. 2 is a vertical sectional view through a cylinder mold vat forming a part of the apparatus; and

Fig. 3 is a partial vertical sectional view on the line 3—3 of Fig. 2.

The apparatus disclosed herein is designed particularly for the treatment of chestnut pulp, and other pulps of similar character, to form board, such as is used for making corrugated board. It is particularly designed to be used in connection with pulp made from the leached chestnut chip residue resulting from the production of tannic acid, and with the so-called "semi-chemical" cook used in refining such chips into pulp. It is, of course, not necessarily so limited in its use. In this treatment the chestnut chips are first given a chemical treatment or cooking which is purposely limited in its effects, with resulting high strength and yield of the ultimate product. In actual commercial operations, this treatment is an incomplete digestion, and it is so controlled that generally the chips retain substantially their original form when discharged from the digester, but may be thereafter readily defibered with proper coordinated treatment. This incomplete digestion may vary considerably depending upon the fibrous material being treated and the ultimate product desired; but in the commercial operations referred to the "semi-chemical cook" has been satisfactory, using an aqueous solution of a normal sulphite containing a salt of a weakly ionized polybasic acid, such as a mixture of sodium sulphite and sodium bicarbonate. The cook is carried out in stages. The charge of wood chips is added to the digester and the chips after being preferably steamed for about half an hour, are then submerged in the cooking liquor and the temperature is brought up to 125° C. to 150° C. with steam for a length of time to secure desired impregnation of the liquor within the wood. The unabsorbed liquor is then drawn off and the liquor saturated material is then raised by the introduction of steam to a temperature of approximately 160° C. to 180° C. for a period of time, during which stage the major portion of the reaction with the incrustants and ligneous material takes place with resultant softening of the chips. The resulting cooked product is then subjected to a suitable defibering treatment.

The pulp or stock so produced is found to possess unusual characteristics which render the stock exceedingly difficult to properly form into a satisfactory board or sheet. This stock has fibers which are short and of high density. It is quick settling

and therefore extremely difficult to maintain the fibers uniformly distributed through the water in which they are suspended. Also when introduced in a stream into a container, chest, vat, or the like the inflowing stream of stock will not readily diffuse or spread uniformly throughout but will maintain its direction of flow in a separate stream, while tending to stratify. The short fibers produce a stock which resembles a mud analogous to a suspension of filler in water. The conventional types of board machines heretofore known have been found unsuited to the production of a satisfactory sheet from this material. In fact experience has shown such machines to be commercially inoperative to handle such a stock.

The present invention provides novel apparatus which is capable of handling stock of this character to form a very satisfactory sheet of good quality without undue breaks and with desired economy in operation. While the invention is hereinafter described in connection with the treatment of chestnut pulp, it is to be understood that the apparatus disclosed is capable of use generally for the formation of board from other pulps, and particularly pulps produced from other hard woods as oak, walnut and the like.

Referring to the drawings, a cylinder mold forming machine is indicated generally at 10. As shown, particularly in Figs. 2 and 3, this machine comprises a vat 11 within which dips a rotary perforate cylinder or mold 13 adapted to form a traveling web from the pulp stock supplied to the vat. The vat is constructed to disperse or diffuse the pulp stock supplied thereto, and to prevent the settling or channeling of the stock, so that an even and uniform supply of the pulp stock is maintained at the forming surface of the cylinder mold. The pulp stock is supplied through a pipe 16 to a chamber 17 formed between an end wall of the vat and a transverse partition 18. The side walls of the chamber are inclined downwardly as indicated at 19, the lower portion of the chamber thus being somewhat V-shaped in cross section. Above the inlet pipe 16 is positioned a transverse baffle 20 extending across the chamber 17. The construction is such that pulp stock introduced into the vat is dispersed or divided into streams and forced to travel around both sides of the transverse baffle 20, the separate streams meeting again above the baffle in the upper portion of the chamber 17. This produces a turbulence and eddying of the pulp stock which effectively resists any tendency to settling or stratification.

Extending across the upper end of the chamber 17 and supported by the partition 18 and the wall of the vat is what is termed a "holey board" 22, which comprises a board running transversely across the vat and having a plurality of small holes or channels 23 therethrough. The turbulence of the stock in the chamber 17 supplies this stock in a well mixed and uniform condition to the under surface of the board 22, the stock then passing through the channels 23 into the upper chamber 24. The stock then passes across a plurality of riffles 25 which are transverse baffles extending across the vat, the tops of the riffles being arranged at successively lower elevations as shown. The stock, after passing the last riffle, passes across a crest 26 provided with a usual wing board 27 and an adjusting screw 28, whereby the elevation of the sides of the crest with reference to the central portion thereof may be adjusted to provide for an even distribution of the stock across the width of the mold.

The stock flowing across the crest 26 passes downwardly into the annular channel 30 between the cylinder mold 13 and the curved wall 31 of the vat. The cylinder mold 13 rotates in the direction of the arrow. The fibrous material in the stock is caught on the rotating forming surface as the water in the stock passes therethrough, the water being removed from the interior of the cylinder mold in the usual manner. In treating pulp stock of this character, it is found that more effective results are secured with large diameter cylinder molds and with a large head or difference in level between the pulp stock on the outside of the mold and the liquor on the inside of the mold. Very satisfactory results have been secured with a cylinder mold having a diameter of about 36 inches to 42 inches, wherein a head of as much as 10 inches between the liquid levels on the outside and the inside of the mold is maintained.

A traveling endless felt 32 passes in contact with the surface of the cylinder mold 13, a couch roll 33 being provided in the usual manner. The felt runs forwardly over the mold 13 where the web formed at this vat is transferred therto. It is to be understood that as many vats and cylinder molds may be provided as desired to build up a sheet of the required thickness, only one being shown herein. The traveling felt 32 conveys the web directly through a first wet press indicated generally at 35, without the interposition of the generally used baby presses or squeeze rolls.

This press comprises an upper press roll 36 and a positively driven lower suction press roll 37 having a suction pocket 38 therein. The upper press roll 36 and the lower press roll 37 are geared together, so that the upper press roll is positively driven.

The felt 32 conveying the wet web from the cylinder mold forming machine moves forwardly to contact with the lower suction press roll 37, and returns around this roll thus contacting over a large portion of the circumference to secure an effective driving engagement. The upper felt, usually used in cylinder machines, is entirely dispensed with in this machine, and the upper surface of the wet web contacts directly with the upper press roll 36. Preferably the vertical diameter of the upper press roll 36, indicated at 40, is offset from the vertical diameter of the lower suction press roll 37, indicated at 41. This is to insure the contacting of the felt 30 and the web supported thereby with the surface of the lower press roll 37 opposite the suction zone 38 after the web has been subjected to pressing action between the nip of the press rolls, as well as to give a less drastic pressing action and provide a couching effect which will remove water from the web without crushing the web, whereby breaks are minimized. The pressure at the nip is considerably reduced over the conventional practice for presses of board machines, while at the same time the suction pocket serves to extract increased amounts of water from the web. Very satisfactory results have been secured with a pressure at the nip of about 8 to 12 pounds per lineal inch as compared with 20 to 40 pounds per lineal inch in conventional board machine practice. The lower roll 37 of this suction press performs the double function of serving as a strain roll about which the felt and web reverse their direction of travel and also as a press roll.

The felt 32 supporting the pressed wet web then travels rearwardly and serves also to convey the web through a second wet press indicated generally at 50. As shown, the second wet press is positioned relatively close to the first wet press 35, permitting a single normal length felt to be used to pick up the web at the cylinder mold and convey it through both the first and second wet presses, with only a short travel of the web on the felt between the first and second presses. Thus very satisfactory results have been secured where the horizontal distance between the vertical diameters of the lower press rolls of the first and second presses is approximately ten feet, although this may be varied. For this purpose a supporting platform 51 carrying the press frame 52 is mounted above the cylinder mold 10 and associated parts. The platform 51 may be conveniently supported by beams or pedestals rising from the side frames of the lower machine, or from the foundation.

The second suction press comprises an upper press roll 56 and a lower suction press roll 57 having a stationary suction pocket 58 therein which extends slightly beyond the nip of the press rolls. To free the web from the felt 32 after passing through the suction press 50, a roller 60 is provided above the felt 32 over which the web is caused to by-pass. The felt 32 then conveys the web beyond the roller 60 to a guide roller 62, where the web, indicated at 63, is removed therefrom and passes with just a short unsupported travel onto a second conveying felt 64. The felt 32 returns over guide rollers 65, an adjustable tensioning roller 66 and a suction box 67 to remove excess water from the felt.

The second felt 64 supported by guide rollers 68 and a tensioning roller 69 receives the web 63 in front of a third through press indicated generally at 75 and conveys it through this press without the interposition of the top felt. Very satisfactory results are secured with an upper brass press roll 76 and a lower rubber press roll 77, a suction press roll not being generally necessary at this press. The felt 64 then conveys the pressed web with just a short travel, when the web is removed from the felt which returns over the guide and tensioning rollers above mentioned. The web 63 removed from the second felt 64 passes with just a short unsupported travel over a lead-in roll 80 to a battery of cylinder driers 81 which are equipped with the usual felt 83 passing over guide rollers 84 for holding the web against the surfaces of the drying cylinders. It is found that with a web formed from pulp of the character herein described, the temperature of the first drying drums of the series should be maintained comparatively quite low to prevent sticking of the web to the surface of the heated drums. The temperature is then staged up gradually until the desired effective drying temperature is attained. The web after passing over the required number of drying cylinders then passes through a machine calender stack 85 and then to a reel 86, these parts being of entirely conventional construction and so not particularly illustrated herein.

A traveling web formed from stock prepared as described above has unusual characteristics which have been found in actual operation to be such as to render conventional methods of formation practically inadequate for satisfactory commercial operation. The wet web is of a sticky nature and readily adheres to any surface which is pressed against it. The sheet when wet is also very weak or tender and will not support its own weight until a substantial proportion of the water has been removed therefrom. Chestnut pulp has a short fiber length, and the incompletely digested pulp does not closely interweave during formation, so that as close a felting is not secured as with the ordinary sheet. In accordance with the method of the present invention,

a pulp is formed by a semi-chemical cook, having a superior quality with unusual yield. This pulp is formed into a sheet by passing onto a forming wire while subjecting the pulp stock to dispersing and agitating action to cause uniform deposition of the stock upon the wire, and prevent quick settling and channeling of the stock with non-uniform distribution. The resulting tender and sticky sheet is subjected to controlled and light pressing action while subjecting to suction, to prevent puddling and crushing of the tender sheet while avoiding the puddling and disruptive action resulting from the pressing of the sticky tender sheet between confining felts, and at the same time preventing sticking of the sheet to a pressing member with which it comes in direct contact, to remove sufficient moisture from the sheet so that it will sustain its own weight. The sheet is then dried, heating first at a comparatively low temperature to prevent sticking of the sheet, and then heating at a progressively higher temperature until an effective drying temperature is attained.

The conventional board machine with both top and bottom felts and baby presses was found in actual practice to result in sticking of the wet web to the top felt and crushing of the web between the felts, with the result that breakage of the web occurred at frequent intervals and operation of the machine could not be continued for more than a few minutes at a time. The apparatus of the present invention overcomes these difficulties. Operation without a top felt when the sheet is quite wet has been found in actual practice to materially assist in overcoming these objections and producing satisfactory operation. Heavy pressure upon the sheet is avoided to prevent crushing of the tender sheet and to prevent puddling or the formation of a pool of water behind the nip of the press rolls through which the web will not carry without destroying its interwoven form or without breaking. The use of a suction press enables the sheet to be satisfactorily handled and the extraction of more water to be effected with decreased pressure at the nip. This construction coupled with the arrangement whereby the felt receiving the web at the cylinder mold conveys it through the first and second suction presses, permits a sufficient drying of the wet tender web so that the sheet will support its own weight for transfer from one felt to another, and so that the web may be readily handled when threading it through the machine. It is to be noted that the transfer points of the wet web where it is generally passed by hand when threading is through the machine are quite short, not being longer than several feet in any instance and being straight carries in the direction of travel of the web. This construction not only permits satisfactory operation of the board machine at speeds as high as 250 to 300 feet per minute and higher, but also enables the web to be threaded through the machine without reducing the speed, whereby breaks may be handled at machine speed, thereby giving increased production with greater ease in handling. Satisfactory results are obtained at each suction press by extending the suction zone within the lower press roll just beyond the nip of the press rolls so that the suction is effective beyond the contact of the web with the top press roll whereby the web is held down upon the bottom felt and prevented from sticking to the top press roll.

By the employment of suction presses not equipped with top felts for the preliminary drying of the web formed at a cylinder mold forming machine of the character illustrated, a very satisfactory sheet of good character and uniformity is produced. The combination of two suction presses and one through press with such a cylinder mold forming machine, together with the temperature control of the driers whereby the temperature is gradually staged up to a desired maximum, has been found to give very satisfactory results with pulps of the character described in the manufacture of corrugated board. The location of the first suction press at the forward or front side of the cylinder forming machine and the second suction press above or adjacent the rear side thereof, and the third press positioned at the rear of the forming machine, conserves space, permits two felts to be sufficient for the entire wet end of the machine, and results in a saving in initial expense and maintenance in that fewer parts are required. At the same time, high speed of production and a good quality of sheet is obtained. The use of a through press for the third press rather than a conventional reversing press results in an improved character of board sheet having less weight per unit of area for the same caliper or thickness of sheet, giving increased surface for less weight.

Although the sheet when wet is very weak, chestnut chip board formed from stock prepared as described above and with the apparatus disclosed, is found to be on the average more than twice as strong as ordinary strawboard, and to have greater rigidity, thereby proving an excellent material for corrugated board. While the fibers themselves are considerably more dense than straw fibers, the formation of the sheet is such that the board or paper produced is generally lighter than ordinary strawboard. The net result is that a board or paper is formed having superior strength, greater rigidity, improved texture, and other desirable characteristics.

While the method herein described, and the form of apparatus for carrying this method into effect, constitute preferred embodiments of the invention, it is to be understood that the invention is not limited to this precise method and form of apparatus, and that changes may be made in either without departing from the scope of the invention which is defined in the appended claims.

What is claimed is:

1. Apparatus of the character described adapted for forming a fibrous sheet from stock of the described characteristics, comprising in combination, a cylinder mold machine for forming a paper web, a single traveling felt in web receiving engagement with said cylinder mold for receiving the web formed at said cylinder mold forming machine on the under surface thereof, and means for driving said felt and for turning the felt with web carried thereby over including a suction press, whereby the felt conveys the web through said suction press with the web supported on the then upper side of said felt.

2. Apparatus of the character described adapted for forming a fibrous sheet from stock of the described characteristics, comprising in combination, a cylinder mold machine for forming a paper web, a suction press including an upper press roll and a lower press roll having a suction zone therein, and a traveling felt in web receiving engagement with said cylinder mold for receiving the web formed at said cylinder mold and for conveying it through said suction press, the said felt picking up on its under surface the web at said cylinder mold and then turning over and conveying the web on its then upper surface, the felt then contacting with the lower suction press roll opposite said suction zone and the upper surface of the said web being exposed and contacting directly with the upper press roll.

3. Apparatus of the character described adapted for forming a fibrous sheet from stock of the described characteristics, comprising in combination, a cylinder mold machine for forming a paper web, a suction press located at the front side of said cylinder mold including an upper press roll and a lower positively driven suction press roll, a felt for conveying the web formed at said cylinder mold through said suction press, said felt extending forwardly from the cylinder mold to said lower press roll and passing around a substantial portion of the circumference of said lower press roll and then extending rearwardly, whereby said lower press roll also serves as a strain roll.

4. Apparatus of the character described adapted for forming a fibrous sheet from stock of the described characteristics, comprising in combination, a cylinder mold machine for forming a paper web, a suction press at the front side of said cylinder mold including an upper press roll and a lower suction press roll, and a felt in web receiving engagement with said cylinder mold for picking up the web on its under surface at said cylinder mold and for conveying the web formed at said cylinder mold through said suction press, said felt with web carried thereby extending forwardly into contact with said lower press roll and then passing around a portion of said roll and carrying the web on the then upper surface of said felt through the nip of said press rolls, the vertical diameters of said upper and lower press rolls being offset.

5. Apparatus of the character described adapted for forming a fibrous sheet from stock of the described characteristics, comprising in combination, a cylinder mold machine for forming a paper web, a suction press located at the front side of said cylinder mold, a second suction press located adjacent the rear side of said cylinder mold, and means for conveying the web formed at said cylinder mold through said suction presses.

6. Apparatus of the character described adapted for forming a fibrous sheet from stock of the described characteristics, comprising in combination, a cylinder mold machine for forming a paper web, a suction press having an upper press roll and a lower suction press roll located at the front side of said cylinder mold, a second suction press having an upper press roll and a lower suction press roll located adjacent the rear side of said cylinder mold, and means for conveying the web formed at said cylinder mold through said suction presses, said web having its upper surface exposed and contacting directly with the upper press rolls of said suction presses.

7. Apparatus of the character described adapted for forming a fibrous sheet from stock of the described characteristics, comprising in combination, a cylinder mold machine for forming a paper web, a first suction press, a second suction press, a through press, and means for conveying the web formed at said cylinder mold through said first and second suction presses and then through said through press.

8. Apparatus of the character described adapted for forming a fibrous sheet from stock of the described characteristics, comprising in combination, a cylinder mold machine for forming a paper web, a first suction press having an upper press roll and a lower suction press roll, a second suction press having an upper press roll and a lower suction press roll, a through press having upper and lower press rolls, and means for conveying the web formed at said cylinder mold through said first and second suction

presses and then through said through press, said web having its upper surface exposed and contacting directly with the upper press rolls of said suction presses, and the same surface of said web being exposed and contacting directly with the upper press roll of said through press.

9. Apparatus of the character described adapted for forming a fibrous sheet from stock of the described characteristics, comprising in combination, a cylinder mold machine for forming a paper web, a first major press, a second major press, and a single felt in web receiving engagement with said cylinder mold for receiving the web formed at said cylinder mold and for conveying it through said first and second major presses.

10. Apparatus of the character described adapted for forming a fibrous sheet from stock of the described characteristics, comprising in combination, a cylinder mold machine for forming a paper web, a first major suction press, a second major suction press, a single felt for picking the web from said cylinder mold machine and for conveying it through said first and second major suction presses, and means positioned after said second major suction press for loosening the web from said conveying felt.

11. Apparatus of the character described adapted for forming a fibrous sheet from stock of the described characteristics, comprising in combination, a cylinder mold machine for forming a paper web, a first major press located at the front side of said cylinder mold machine, a second major press located above said cylinder mold machine, and means for conveying the web formed at said cylinder mold machine forwardly and around said first major press and through the nip thereof, and then rearwardly above said cylinder mold machine and through the nip of said second major press.

12. Apparatus of the character described adapted for forming a fibrous sheet from stock of the described characteristics, comprising in combination, a cylinder mold machine for forming a paper web, a first major press located at the front side of said cylinder mold machine, a second major press located above said cylinder mold machine, a third major through press located at the rear side of said cylinder mold forming machine, and means for conveying the web formed at said cylinder mold machine forwardly to said first major press and then rearwardly through the nip thereof, then rearwardly above said cylinder mold machine and through the nip of said second major press, and then rearwardly through the nip of said third major through press.

13. Apparatus of the character described adapted for forming a fibrous sheet from stock of the described characteristics, comprising in combination, a cylinder mold machine for forming a paper web, a first major press, a second major press, a third major press, and two felts for conveying the web formed at said cylinder mold forming machine through said first, second and third major presses, whereby only two transfer points for the wet web are provided, one of said felts being in web receiving engagement with said cylinder mold for picking up said web directly from said cylinder mold and then conveying it through said first and second major presses before a transfer point is reached.

14. The method of forming a fibrous sheet from a quick settling and channeling pulp having sticky characteristics, which comprises passing the pulp onto a forming surface while subjecting to dispersion and agitation to cause uniform deposition and the formation of a tender and sticky sheet, and then drying the sheet by heating at progressively increasing temperatures until an effective drying temperature is attained.

15. The method of forming a fibrous sheet from a quick settling and channeling pulp having sticky characteristics, which comprises passing the pulp onto a forming surface while subjecting to dispersion and agitation to cause uniform deposition and the formation of a tender and sticky sheet, and then transferring the sheet directly to a web carrying medium, and repeatedly subjecting the sheet while supported on only one side by the web carrying medium to pressure without puddling while subjecting to suction and preventing sticking of the sheet.

16. The method of forming a fibrous sheet from a quick settling and channeling pulp having sticky characteristics, which comprises passing the pulp onto a forming surface while subjecting to dispersion and agitation to cause uniform deposition and the formation of a tender and sticky sheet, then subjecting the sheet to pressure without puddling while subjecting to suction and preventing sticking of the sheet, and then drying the sheet by heating initially at a relatively low temperature and then gradually staging up the temperature until an effective drying temperature is attained.

17. Apparatus of the character described adapted for forming a fibrous sheet from stock of the described characteristics, comprising in combination, a rotary web forming surface, an endless web carrying medium in web receiving engagement with said rotary forming surface for picking up the formed web directly from said forming surface, a suction press including an upper press roll and a lower suction press roll, and means for guiding said web carrying medium through said suction press in contact with said lower suction press roll, the web carrying medium conveying the web through

said suction press with the upper surface of said web exposed and contacting directly with said upper press roll.

18. Apparatus of the character described adapted for forming a fibrous sheet from stock of the described characteristics, comprising in combination, a rotary web forming surface, an endless web carrying medium in web receiving engagement with said rotary forming surface for picking up the formed web directly from said forming surface, a plurality of suction presses, each suction press including an upper press roll and a lower suction press roll, and means for guiding said web carrying medium through said plurality of suction presses in contact with the lower suction press roll of each press, the web carrying medium conveying the web through said suction presses with the upper surface of said web exposed and contacting directly with the upper press roll of each press.

19. Apparatus of the character described adapted for forming a fibrous sheet from stock of the described characteristics, comprising in combination, a rotary web forming roll, means for introducing fibrous stock to said roll to form a sheet thereon, said means having provisions for dispersing and agitating the stock to prevent settling and channeling of the stock, an endless web carrying medium in web receiving engagement with said rotary forming roll for picking up the formed web directly from said forming roll, a suction press, and means for guiding said web carrying medium with web carried thereby on the upper surface of said medium through said suction press.

In testimony whereof I hereto affix my signature.

WALTER J. ZIMMERMAN.