Dec. 10, 1929. A. C. SAVAGE 1,739,421

ELECTRIC TRAIN LINE COUPLING

Filed Dec. 26, 1928

Fig. 1.

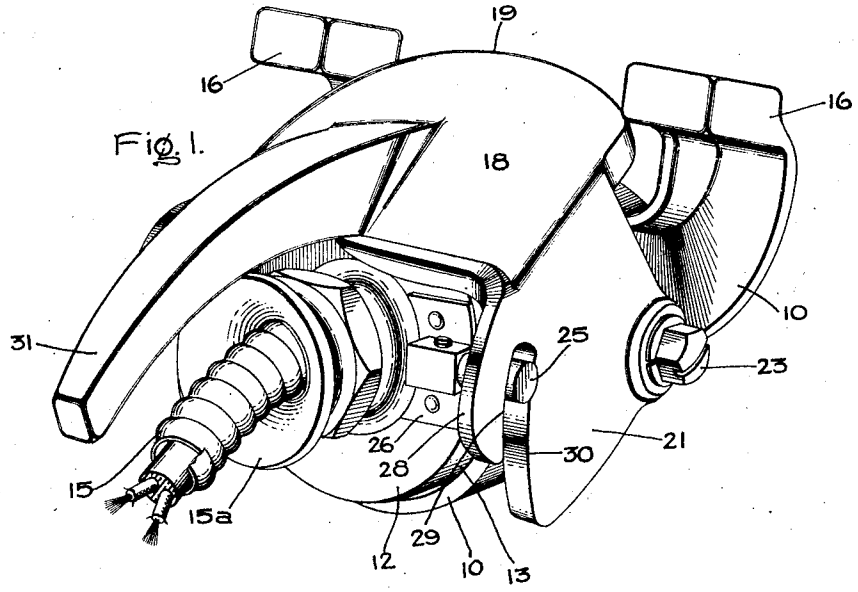

Fig. 2.

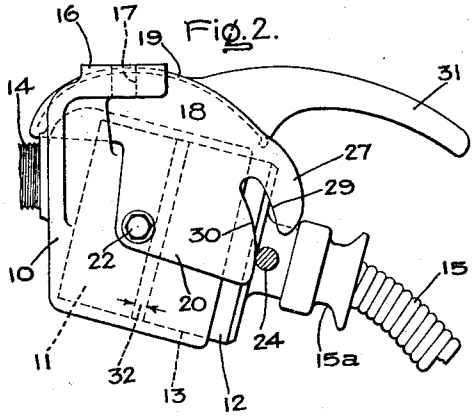

Fig. 3.

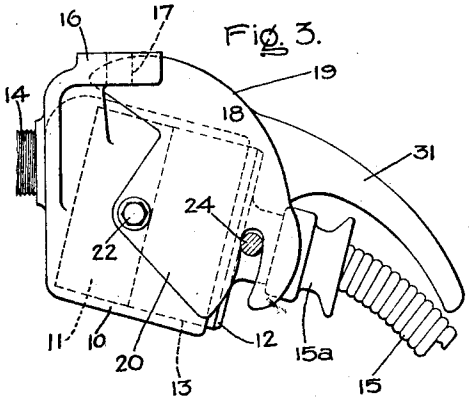

Fig. 4.

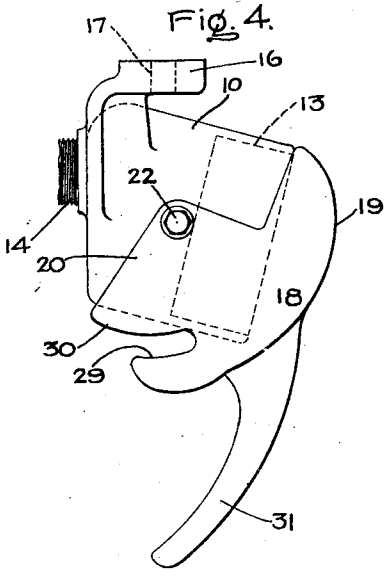

Inventor:
Arthur C. Savage,
by Charles E. Mullen
His Attorney.

Patented Dec. 10, 1929 1,739,421

UNITED STATES PATENT OFFICE

ARTHUR C. SAVAGE, OF ERIE, PENNSYLVANIA, ASSIGNOR TO GENERAL ELECTRIC COMPANY, A CORPORATION OF NEW YORK

ELECTRIC-TRAIN-LINE COUPLING

Application filed December 26, 1928. Serial No. 328,465.

My invention relates to electric connectors, particularly of the plug and socket type such as ordinarily used in coupling electric train lines, and has for its principal object the provision of a device of this character provided with improved means whereby the connecting plug may be easily and securely forced into or out of engagement with the cooperating connecting socket.

In the connecting together of the train circuits of one railway car with those on an adjacent car it is customary to use a plug and socket coupling device, the plug being connected to the circuits on one car and the socket being connected to the circuits on the other car. With the heavy duty couplings required for railway service it requires considerable manual effort to push the plug in place in the socket and to remove the plug from the socket and when the parts become roughened or marred in service it is often necessary to use additional mechanical force to accomplish these results. The plug is usually attached to a flexible cable and, owing to the effort required, especially in removing the plug from the socket a trainman is apt to jerk or whip this cable or strike it with a switch bar. Any of these methods soon causes the cable wires to break causing an open circuit with a resulting serious delay.

In accordance with the usual practice the receiving member or socket is provided with a movable cover member for normally preventing the entrance of dirt or other foreign matter into the socket when the plug is removed. In accordance with my invention, this cover member is also made to serve as a means for readily forcing the cooperating connector plug into or out of engagement with the socket. Thus with my coupling device it is only necessary to grasp a handle provided on the cover member and move it in one direction or the other in order to engage or disengage the plug and socket. In some of its aspects my invention relates to the form of electric cable coupler described and claimed in the patent to Crocker No. 1,200,317, of October 3, 1916.

The general construction of the improved coupling device of my invention will be better understood from the following description taken in connection with the accompanying drawing and the scope of the invention will be pointed out in the appended claims.

In the accompanying drawing, Fig. 1 is a perspective view of a preferred form of coupling embodying the invention, while Figs. 2, 3 and 4 are somewhat diagrammatic side views showing respectively the coupling with the plug being ejected, the plug clamped in place and the plug entirely out of the socket with the cover closed.

Referring to the drawing, in carrying out my invention in the preferred form I have provided a metal casing 10, this casing serving as a supporting housing for a fixed connecting member or socket 11 and a movable connecting member or plug 12. The socket 11 is preferably located in the rear of the casing 10 and thus a hollow portion or opening 13 is formed at the forward end of the casing, this aperture serving to house the plug 12. It is to be understood that the socket 11 is to be connected with the circuits of one car of the train through a cable or pipe conduit 14 while the plug 12 is connected with corresponding circuits on an adjoining car by means of a flexible cable 15. Thus, when the plug 12 is placed in the casing 10 in engagement with the socket 11, corresponding circuits of the two cars will be connected. Since the form of the connecting surfaces of the plug 12 and socket 11 do not constitute a part of my invention, I have not shown any particular contacting means. It is to be understood however, that various forms may be used, for instance, either the plug or the socket may be provided with projecting contact tips or fingers while the socket may be provided with apertures corresponding in position and adapted to receive the fingers of the plug. A bell-shaped extension 15^a is secured to the plug 12, this extension serving to prevent breaking of the cable 15 where it enters the plug, and also as a handle which may be grasped when inserting or removing the plug. In order to mount or secure the casing 10 to a support such as to the end of a railway car, a pair of supporting brackets 16 are secured to or formed integral with

the sides of the casing and extend upwardly. Suitable screws or bolts may be passed through apertures 17 in the brackets 16 to secure the casing to a car.

In order to keep dirt, water, and other foreign matter from the interior of the casing 10 a closure member 18 is pivotally mounted on the casing, this closure member comprising a cover portion 19 and a pair of depending side portions 20 and 21. Suitable trunnions 22 and 23 are provided at the sides of the casing 10 to form pivotal supports for the depending side portions 20 and 21 of the closure member 18. As will be observed more clearly in Fig. 4, the cover portion 19 of the closure member 18 is of a shape and size sufficient to adequately cover the opening 13 of the casing 10 when the closure member 18 is moved to its lowest or covering position as shown in this figure. Thus, when the coupling is not being used, i. e., when the plug is not in engagement with the socket 11, the closure member 18 will be placed in the position shown in Fig. 4 and dirt, water, and other foreign matter will be kept from the interior of the casing 10.

In accordance with my invention I have provided cooperating means associated with both plug and the closure member 18 for causing the plug 12 to be forced into or ejected from the casing 10 in accordance with different predetermined movements of the closure member. To this end I have provided a pair of lugs 24 and 25 projecting diametrically from the plug 12, and as shown more clearly in Fig. 1, these lugs are secured to clamping plates 26 which in turn are attached to the plug 12 by means of suitable bolts or rivets. Although I have shown the clamping plates 26 as separate members attached to the plug 12 by means of rivets, I do not wish to be limited to this specific construction. The lugs 24, 25 may, for instance, be secured to or formed integral with a pair of ears which in turn may be cast integral with the plug 12, without departing from the scope of my invention. On the cover each side portion 20, 21 has at its forward edge a downwardly projecting extension 27, 28, the inner edge of each of these extensions forming cams 29, 29. The remaining part of the forward edge of each depending portion 20, 21 is also formed into a cam 30. A suitable handle 31 is formed on the cover portion 19 to aid in moving the closure member 19. The space formed between the cam edges 29 and 30 is slightly greater in width than the diameter of the lugs 24, 25 and thus the cams 29 and 30 by bearing against the lugs 24, 25 cause the plug 12 to move into or out of the casing 10 when the closure member 18 is moved downwardly or upwardly respectively. It will be observed with reference to Fig. 2 that when the closure member 18 is moved from the position shown in Fig. 2 to the position shown in Fig. 3, the plug 12 is moved inwardly by the cams 29 a distance designated by the arrows and the reference character 32.

Assuming that the plug 12 has been placed loosely in the aperture 13 of the casing 10 as is shown in Fig. 2 and the closure member 18 moved downwardly by means of the handle 31, the cams 29 will engage the lugs 24 and 25 and will force the plug 12 into the interior of the casing 10 until it has reached the position shown in Fig. 3. It will be observed that when in the position shown in Fig. 3 it will be impossible to remove the plug without raising the closure member 18 to the position shown in Fig. 2. Due to the effect of gravity, the closure member 18 will tend to remain in its lowest position. The plug 12 will thus be securely held adjacent the socket 11 and the danger that the plug may be removed from the socket through vibration or an accidental pulling of the cable 15, will be prevented.

When it is desired to remove the plug 12 from the socket 11 it is necessary only to grasp the handle 31 and to raise the closure member 18. This movement of the closure member in an upward direction causes the cams 30 to force the lugs 24 and 25 and consequently the plug 12 outwardly until the plug has reached the position shown in Fig. 2, at which time the current carrying plug is out of electrical contact with the socket 11. The plug 12 may now be readily removed from the casing 10 by merely pulling in an outward direction. It will thus be observed that although the plug may be held in very tight friction engagement with the socket 11 as shown in Fig. 3, it will not be necessary to put a strain on the cable 15 in order to disengage the plug from the socket, but instead, the plug may be readily disengaged on the application of very little force applied to the handle 31 to move the closure member 18 in an outward direction.

My closure member thus has three distinct functions, namely, the closing of the aperture 13 in the casing 10 when in the position shown in Fig. 4, the forcing of the plug 12 into engagement with the socket 11 when in the position shown in Fig. 3, and the disengaging of the plug 12 from the socket 11 when the closure member is moved to the position shown in Fig. 2. Since the plug can be removed or inserted in no other way than by the use of the cam cover trainmen or other attendants will not jerk or whip the cable and the life of the cable will thus be materially lengthened. The plug can be inserted or removed quickly, thus constituting an important factor in rapid transit systems.

While I have described my invention as embodied in concrete form in accordance with the provisions of the patent statutes, it should be understood that I do not limit my invention thereto, since various modifications thereof will suggest themselves to those

skilled in the art without departing from the spirit of my invention, the scope of which is set forth in the annexed claims.

What I claim as new and desire to secure by Letters Patent of the United States, is:

1. In a connecting device, the combination with a plug and a socket adapted to receive said plug, of a movable cover for said socket, and means associated with said cover for forcing said plug out of engagement with said socket upon a predetermined movement of the cover.

2. In a connecting device, the combination with a fixed connecting member and a movable connecting member, of a housing for substantially enclosing said fixed connecting member, a cover for said housing having cams formed thereon for forcing said movable connecting member into and out of engagement with said fixed connecting member.

3. In an electric train line coupling, the combination with a plug and a socket adapted to receive said plug, of a casing surrounding said socket, said casing being provided with an opening through which said plug may be inserted, a cover member for said opening pivotally mounted on said casing so as to be movable between two positions to respectively cover and uncover said opening, and cams formed integral with said cover member for forcing said plug into and out of engagement with said socket when said cover member is moved intermediate said positions.

4. In an electric train line coupling, the combination with a plug and a socket adapted to receive said plug, of a casing surrounding said socket, said casing being provided with an opening through which said plug may be inserted, a cover member pivotally mounted on said casing so as to be movable between an uncovering position and a covering position, a pair of lugs extending laterally from said plug, and cam means associated with said cover member for engaging said lugs to force said plug into engagement with said socket when said cover member is moved from said uncovering position toward said covering position.

5. In an electric train line coupling, the combination with a plug and a socket adapted to receive said plug, of a casing surrounding said socket, said casing being provided with an opening through which said plug may be inserted, a cover member pivotally mounted on said casing so as to be movable between an uncovering position and a covering position, a pair of lugs extending laterally from said plug, cam means associated with said cover member for engaging said lugs to force said plug into engagement with said socket when said cover member is moved from said uncovering position toward said covering position, and a second cam means associated with said cover member for engaging said lugs to withdraw said plug from said socket when said cover member is moved from said covering position toward said uncovering position.

6. In an electric train line coupling, the combination with a fixed connecting member and a movable connecting member, of a casing surrounding said fixed member provided with an opening through which said movable member may be inserted, lugs on said movable member, a closure member for said opening pivotally mounted on said casing, said closure member comprising a cover portion and a pair of depending side portions, and cams projecting from the edges of said side portions and cooperating with said lugs to force said movable connecting member into engagement with said fixed connecting member when said closure member is moved in one direction.

7. In an electric train line coupling, the combination with a fixed connecting member and a movable connecting member, of a casing surrounding said fixed member provided with an opening through which said movable member may be inserted, lugs on said movable member, trunnions projecting from said casing, a closure member for said opening pivotally mounted on said trunnions, said closure member comprising a cover portion and a pair of depending side portions, a handle secured to said cover portion, a pair of cam members projecting from the forward edges of said side portions and cooperating with said lugs to force said movable connecting member into engagement with said fixed connecting member when said closure member is moved in one direction, and a second pair of cams formed on the forward edges of said side portions and cooperating with said lugs to withdraw said movable connecting member from said fixed connecting member when said closure member is moved in the other direction.

In witness whereof, I have hereunto set my hand this 21st day of December, 1928.

ARTHUR C. SAVAGE.