US 20100125949A1

(19) United States

(12) Patent Application Publication

Stebbing

(10) Pub. No.: US 2010/0125949 A1

(43) Pub. Date: May 27, 2010

(54) **INFANT SLEEPING AREA VENTILATION SYSTEM FOR THE PREVENTION OF SUDDEN INFANT DEATH SYNDROME**

(75) Inventor: **Franklin Leroy Stebbing**, Norfolk, NE (US)

Correspondence Address:
BANNER & WITCOFF, LTD.
TEN SOUTH WACKER DRIVE, SUITE 3000
CHICAGO, IL 60606 (US)

(73) Assignee: **Rex Enterprises, LLC**, Norfolk, NE (US)

(21) Appl. No.: **12/621,605**

(22) Filed: **Nov. 19, 2009**

Related U.S. Application Data

(60) Provisional application No. 61/117,360, filed on Nov. 24, 2008, provisional application No. 61/168,113, filed on Apr. 9, 2009.

Publication Classification

(51) **Int. Cl.**
A47C 21/04 (2006.01)

(52) **U.S. Cl.** **5/423**

(57) **ABSTRACT**

A ventilation system that includes a fan for providing fresh air within an infant's sleeping area. The fan may be mounted to the infant's sleeping device and may include fan guards surrounding the fan for increased safety. The ventilation system may include a sensing device for monitoring the conditions within the infant's sleeping area. The sensing device may monitor the oxygen level, the carbon dioxide level, and the presence of smoke. The sensing device may monitor for additional toxic gasses or hazardous conditions within the infant's sleeping area. The ventilation system may further include a remote receiver that receives signals from the sensing device if a hazardous condition exists within the infant's sleeping area. The ventilation system may further include local and remote alarms configured to provide notification of a hazardous condition within the infant's sleeping area.

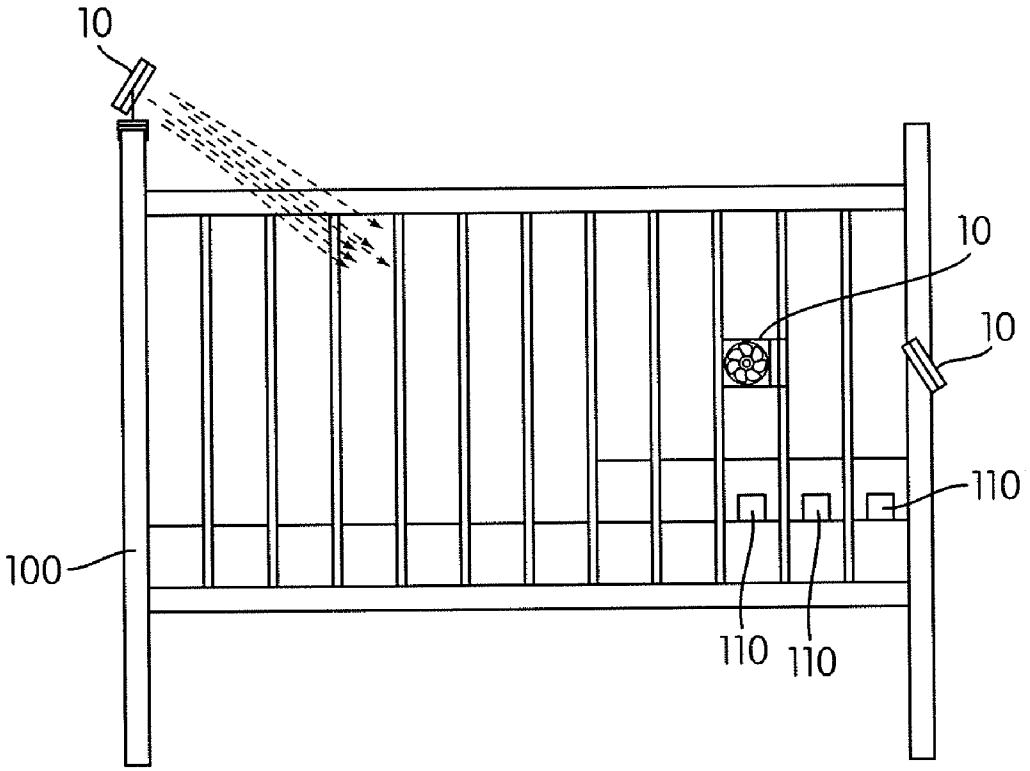

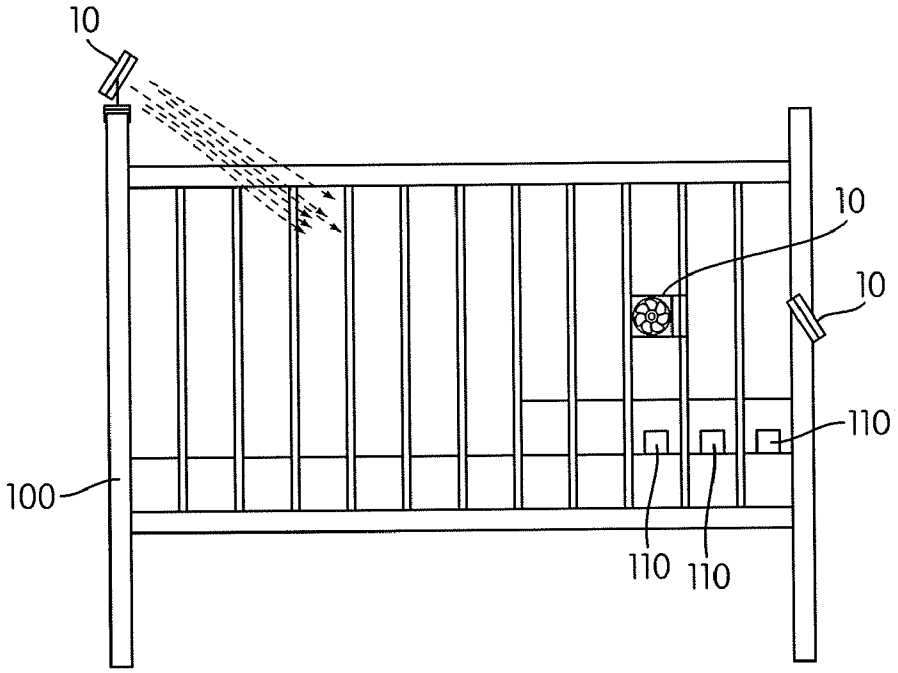

FIG. 1A

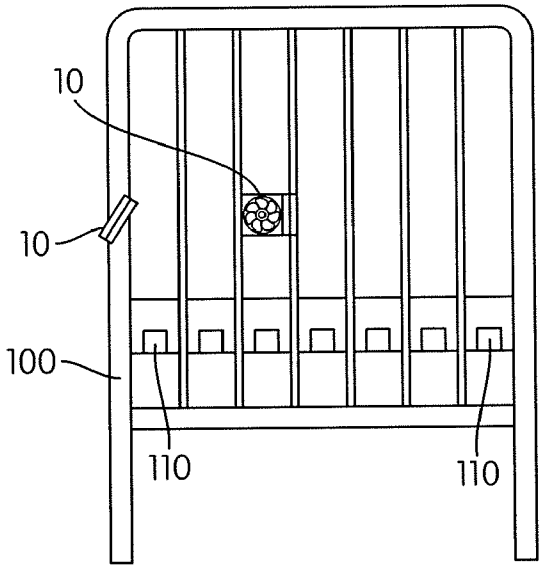

FIG. 1B

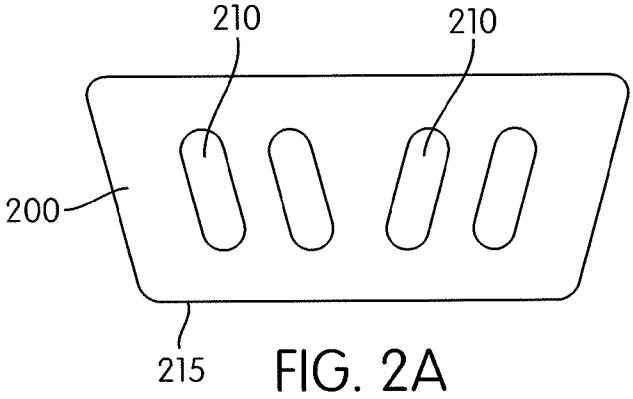

FIG. 2A

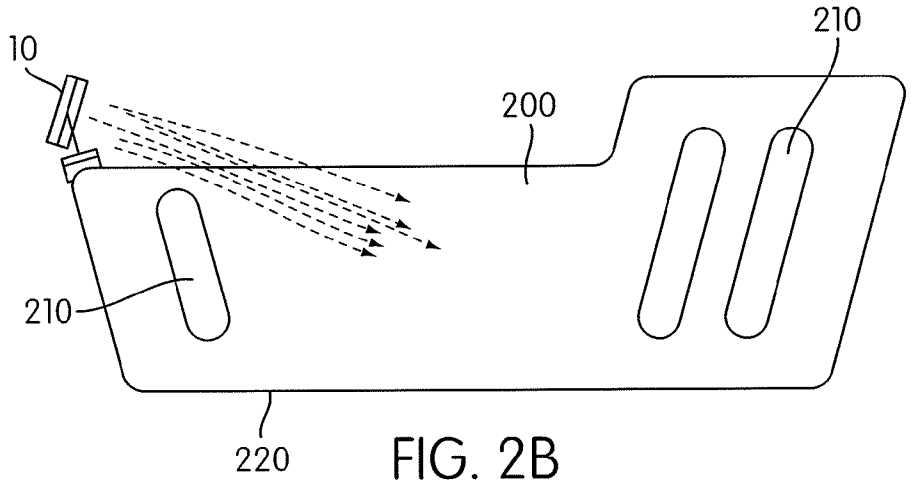

FIG. 2B

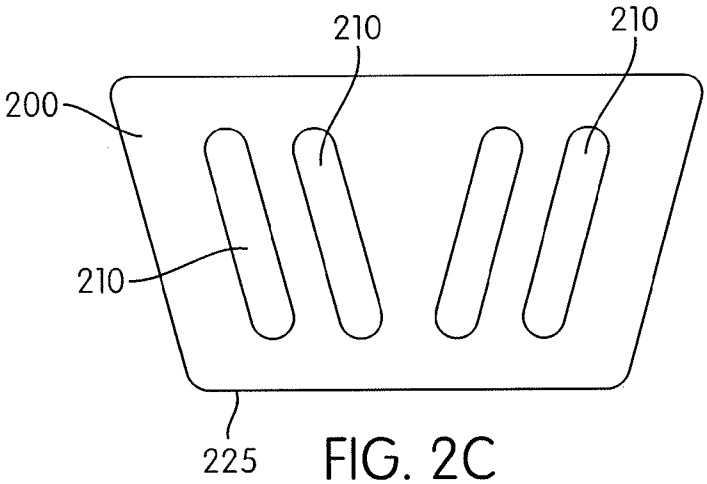

FIG. 2C

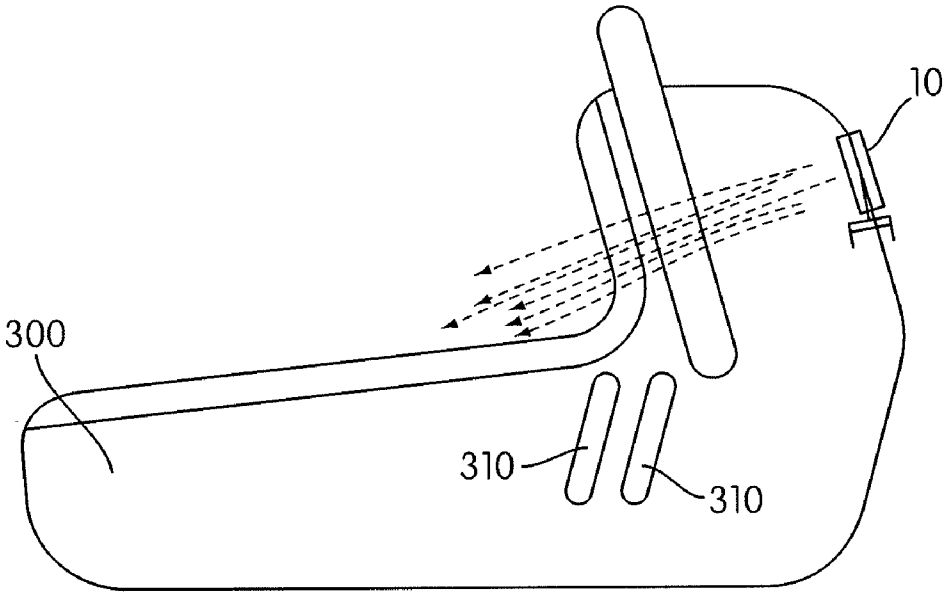

FIG. 3A

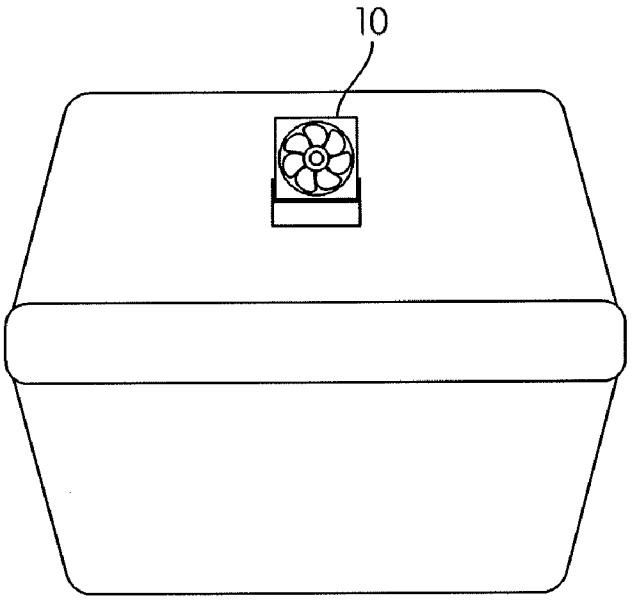

FIG. 3B

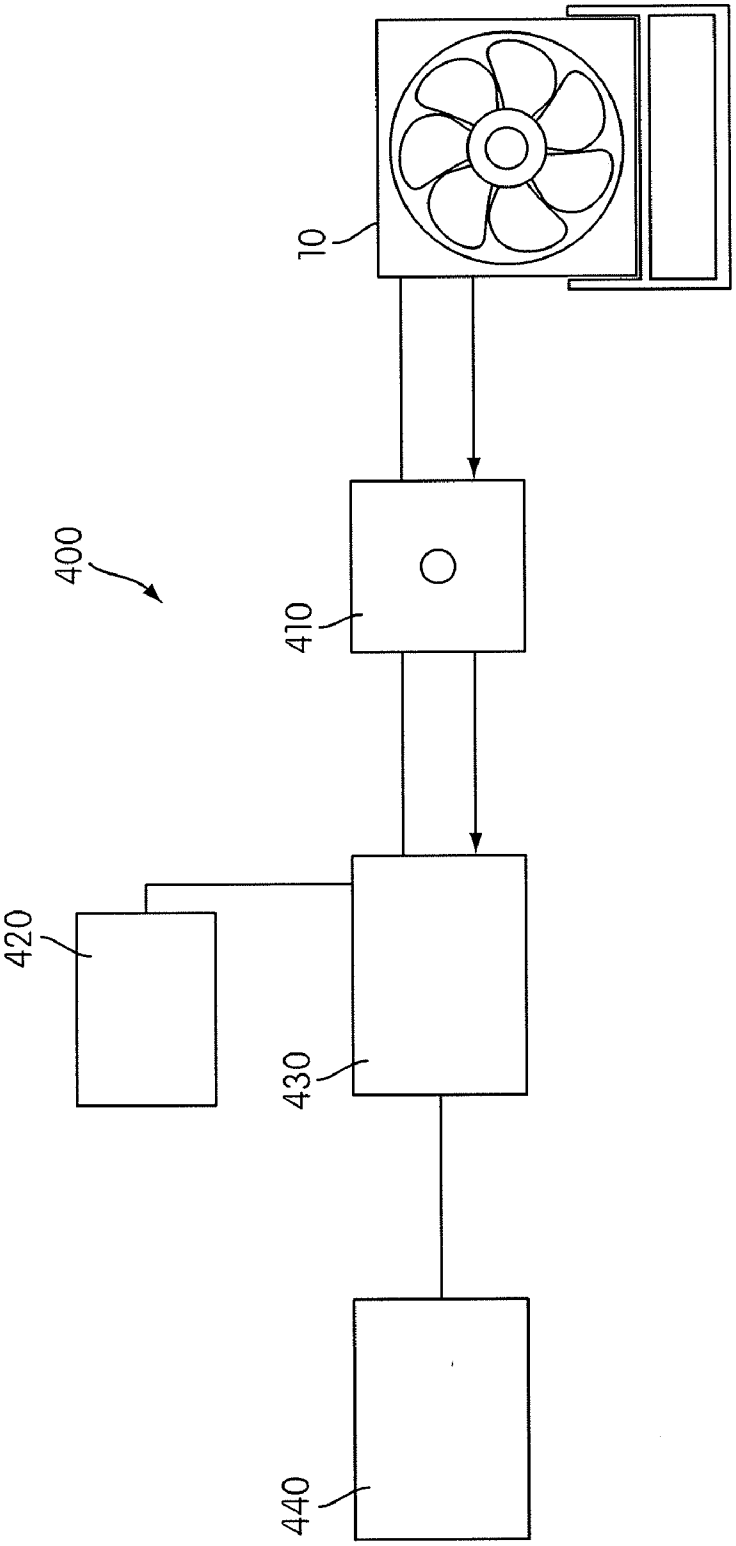

FIG. 4

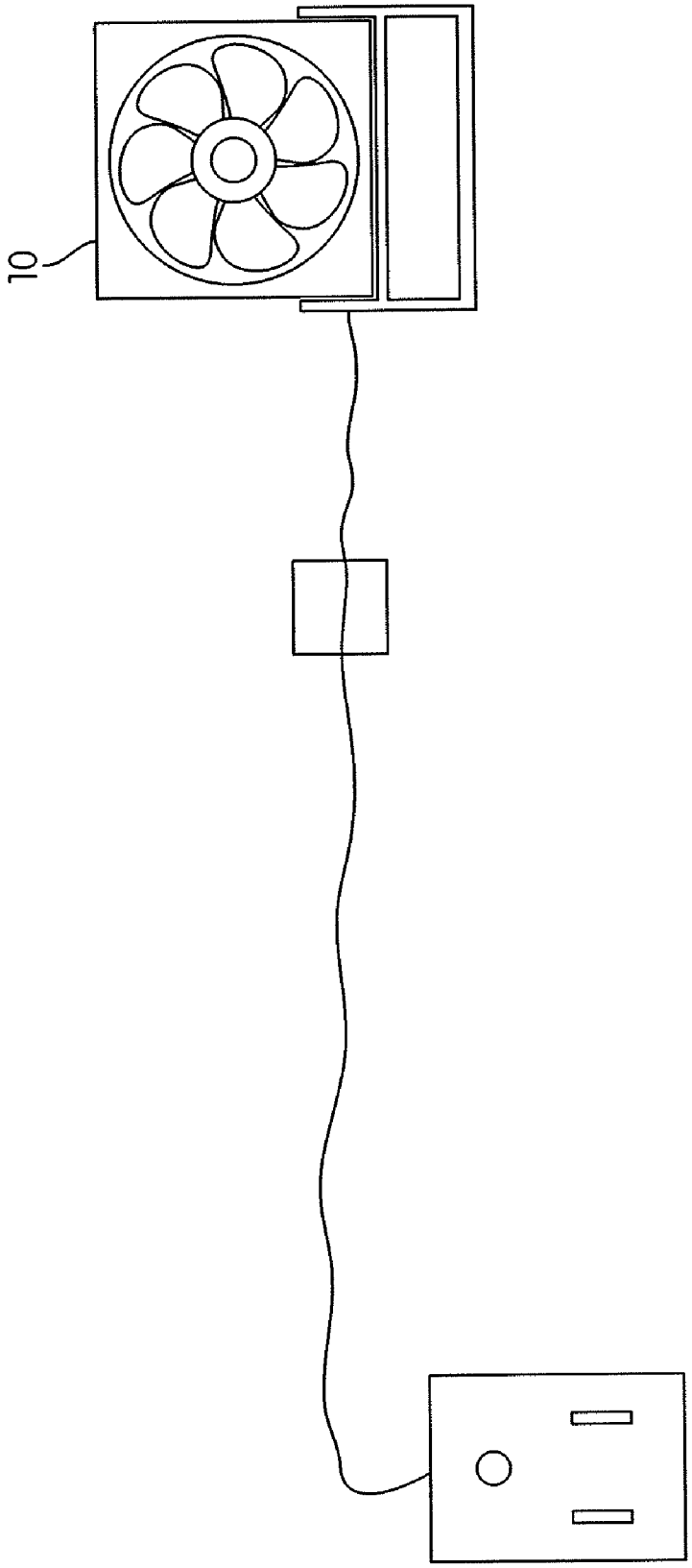

FIG. 5

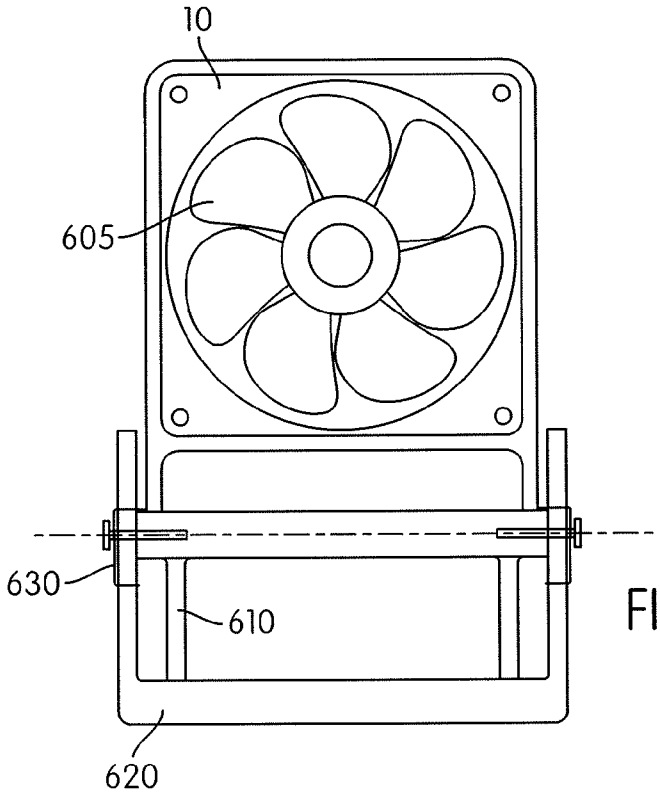

FIG. 6A

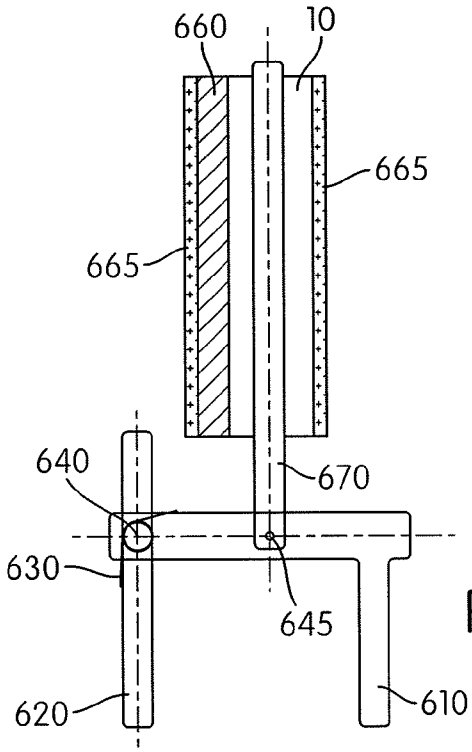

FIG. 6B

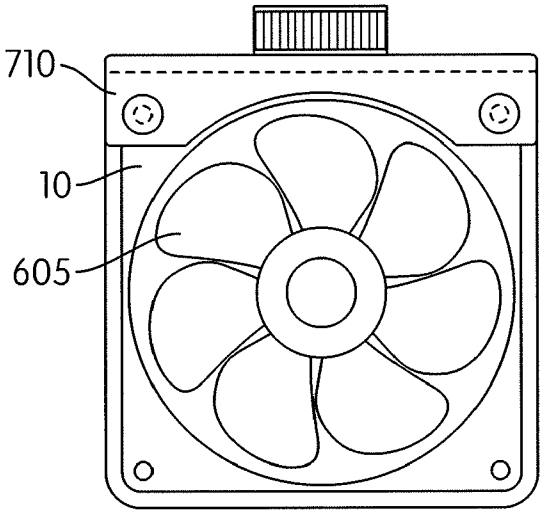

FIG. 7A

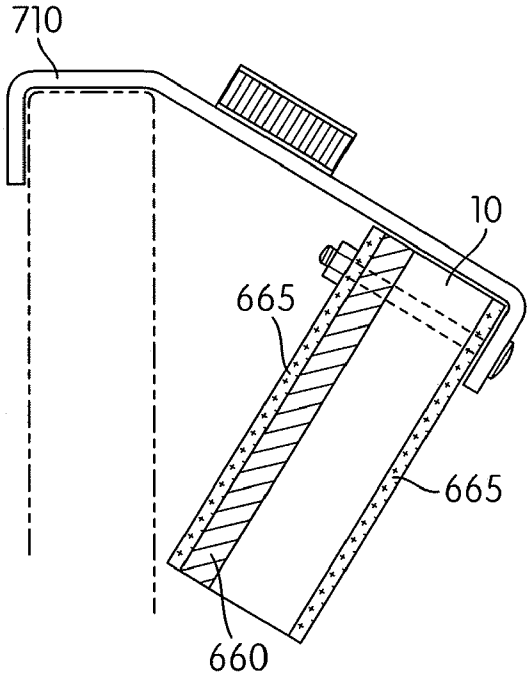

FIG. 7B

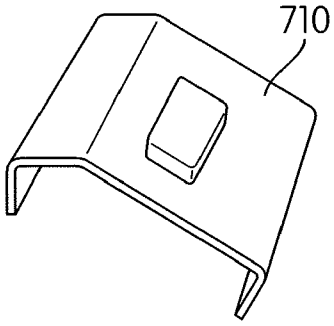

FIG. 7C

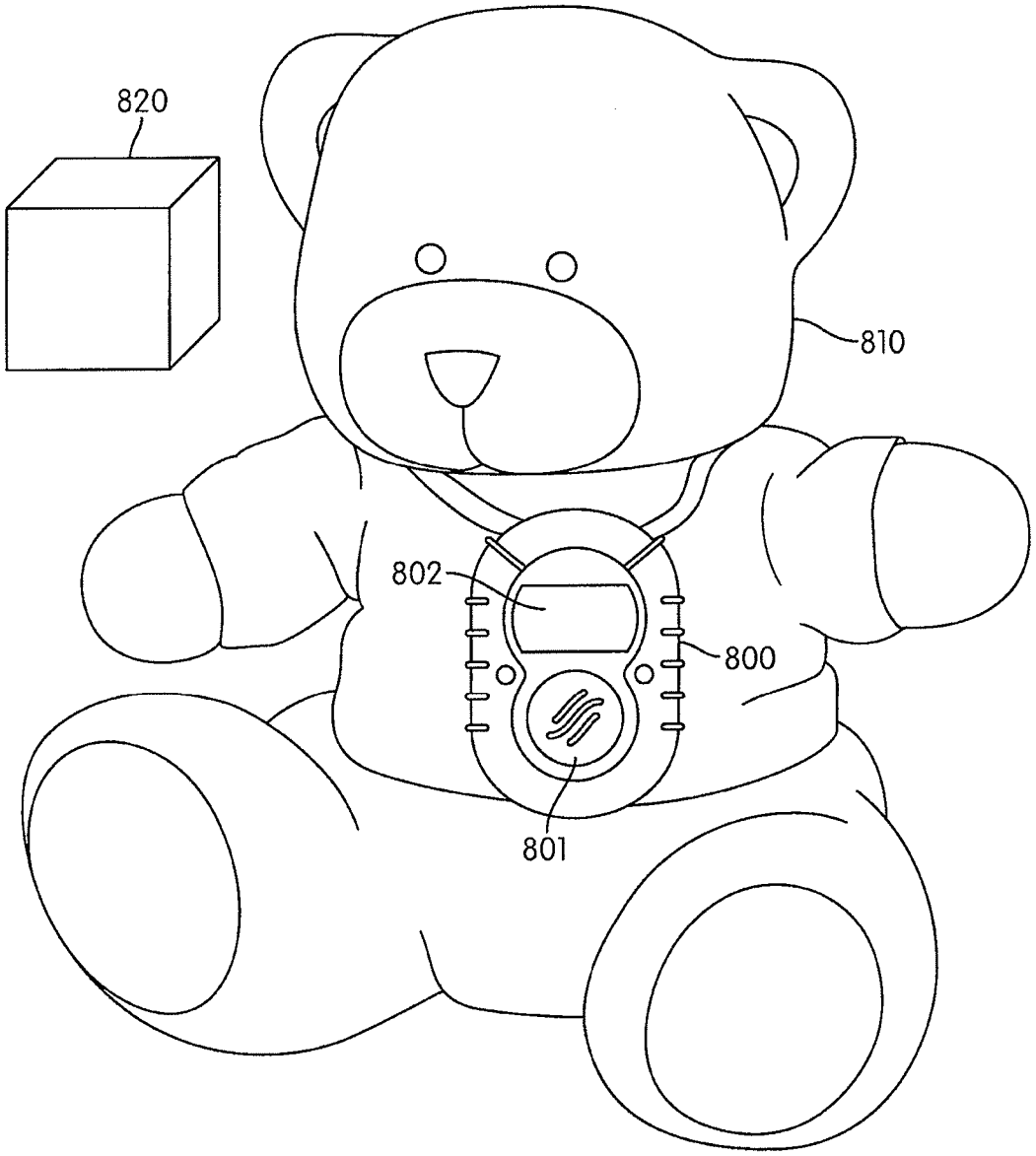

FIG. 8a

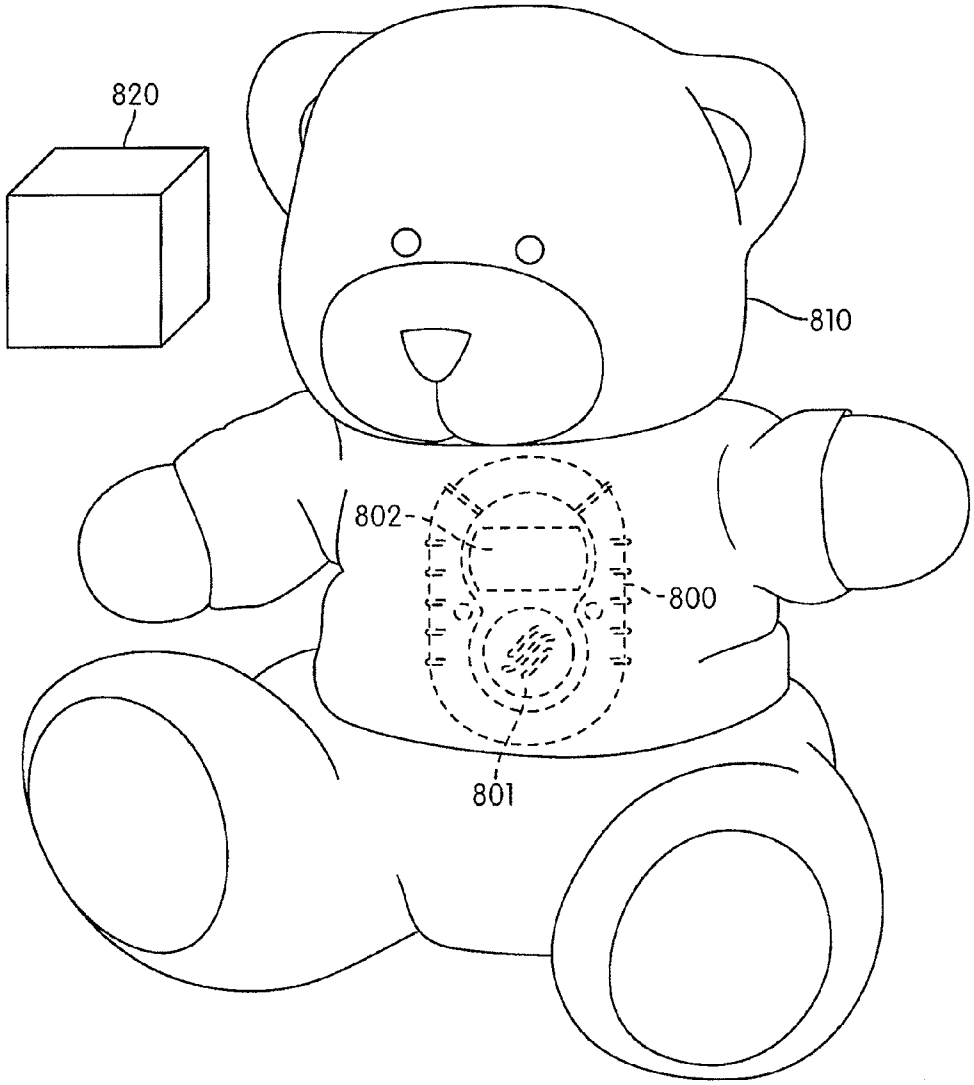

FIG. 8b

INFANT SLEEPING AREA VENTILATION SYSTEM FOR THE PREVENTION OF SUDDEN INFANT DEATH SYNDROME

CROSS-REFERENCE TO RELATED APPLICATIONS

[0001] This Non-Provisional Application claims benefit to U.S. Provisional Application Ser. No. 61/117,360 filed Nov. 24, 2008 and U.S. Provisional Application Ser. No. 61/168,113 filed Apr. 9, 2009.

FIELD OF THE INVENTION

[0002] The invention relates generally to a ventilation system for use in infant sleeping areas to aid in the prevention of Sudden Infant Death Syndrome, also known as "Crib Death". The invention also relates generally to eliminating toxic gases and cooling the infant in his/her sleeping area.

BACKGROUND OF THE INVENTION

[0003] Sudden Infant Death Syndrome (SIDS), also known as Crib Death is a devastating tragedy that claims the lives of about 2500 young infants each year in the United States alone. Until recently, the cause of SIDS was not well known or understood. Recent data provides strong indications that the cause of SIDS is re-breathing of carbon dioxide exhaled by the infant, which deprives the infant of vital oxygen. Carbon dioxide is heavier than air and therefore tends to pool in basin shaped vessels such as bassinets, car seats, and cribs that include plastic enclosures such as "bumpers." It has recently been discovered and reported by *Archives of Pediatrics & Adolescent Medicine*, a monthly professional medical journal published by the American Medical Association, that SIDS and Crib Death can be decreased by 73% if the infant is sleeping in an area where there is a room fan. The cause of SIDS may the lack of sufficient oxygen and/or an increase in carbon dioxide in the infant's breathing air. Normal air contains 20.9% oxygen and 0.03% carbon dioxide, while air exhaled from a human contains about 5% carbon dioxide.

[0004] Generally, ventilation for an infant's sleeping area is not often suggested or employed. The typical instruction given to parents is to place the infant on his/her back while sleeping, since this is thought to reduce the incidence of SIDS. But, this is perhaps the result of locating the baby's nose and mouth above the carbon dioxide pool trapped in the bassinet or crib with its plastic sides forming a basin to collect this toxic gas. Additionally, in the past, parents and healthcare professionals unknowingly have used cribs or high sided bassinets, often draping them in impervious materials that actually trapped and concentrated carbon dioxide and other harmful products in the infant's breathing space. These practices exacerbate the problem and perhaps even created it. These practices were perhaps an attempt to eliminate drafts on the infant, but are now found to be counter productive.

[0005] Until recently the methods used to ventilate rooms containing cribs and bassinets, if any were used, were the hit-or-miss use of room fans, which move enough excess air volume to ventilate the bed while also moving large volumes of air throughout the room. Another method for ventilating cribs is a fan and duct system illustrated in U.S. Pat. No. 5,592,704, which places ducts in a crib with the duct openings directed to ventilating the sleeping area. Due to the drawbacks and complexities of these methods, neither is in popular use.

[0006] The basic objects of this invention are to provide a simple, reliable means to monitor the breathing air in an infants sleeping area and to alarm if it is outside of a preset limit. In its simplest form the sensor consists of an oxygen monitor that is normally intended for use by an adult worker in an industrial or similar setting where breathing air can be hazardous. These hazardous areas are known as "confined spaces" where, for example, oxygen can be depleted by combustion or displaced by other gasses or chemical processes. The worker wears the oxygen sensor and is usually warned if the oxygen level decreases from the normal 20.9% to anything below 19.5%. The warning consists of a loud audible sound accompanied by flashing lights. For an infant air monitor the technology is used instead to monitor the air in the sleeping space such as a crib or bassinet.

[0007] According to information from OSHA, "human beings begin to suffer adverse health effects when the oxygen level drops below 19.5%". According to the *Encyclopedia of Clinical Toxicology*, By Irving S. Rossoff, Edition: illustrated, Published by Informa Health Care, 2002, ISBN 1842141015, 9781842141014, page 201 (paraphrased) carbon dioxide levels, levels greater than 0.5% (5000 ppm) have caused drowsiness, asphyxiation, coma, paralysis, increased respiration, and cyanosis in man.

[0008] Experiments using an oxygen meter to determine the increase in carbon dioxide in air caused by re-breathing were conducted. The oxygen meter was placed in a simulated bassinet along with short tubing. By inhaling and exhaling into the top end of the tubing, the oxygen level in the simulated bassinet quickly dropped from 20.9% to less than 16%, in less than 30 seconds, tripping the alarms on the oxygen monitor. The oxygen levels continued to drop but the experiment was stopped for safety concerns. Since there was a 5% drop in oxygen, it can be concluded that there was a 5% increase in carbon dioxide.

[0009] The experimental simulated bassinet has similar characteristics to a baby bassinet, such that the bassinet will form a basin and thus trap and pool carbon dioxide gas. Carbon dioxide is about 37% heavier than air, so carbon dioxide tends to collect in the bottom of a closed basinet or crib because the crib or basinet acts as a basin. It will form a deepening pool if the surrounding air is relatively undisturbed. The carbon dioxide is constantly replenished and further concentrated by a breathing infant. The infant can eventually drown in the pool of carbon dioxide unless there is intervention. Accordingly, the present invention is directed at providing advancements in monitoring and removing toxic gases from an infant's sleeping area.

BRIEF SUMMARY OF THE INVENTION

[0010] The present invention achieves the above-mentioned advancements by providing a compact ventilation system for monitoring and removing toxic gases from various infant sleep areas. This invention allows fresh air to flow into the infant sleeping area, and flushes and removes toxic gases such as carbon dioxide, methane and ammonia. The invention also removes bacteria and viruses from the infant's sleeping area, which helps keep the sleeping area sanitized by providing increased oxygen levels, which are known to kill bacteria and viruses.

[0011] The invention may also flush odors from an infant's sleeping area by removing waste gases within the sleeping area. The invention may also reduce high levels of humidity, thereby reducing the growth of microbes such as bacteria,

viruses, mold, and mildew. In one embodiment of the invention, by attaching the ventilation system to the foot or head or other portion of an infant's sleeping area and directing the flow of fresh air toward the infant, the air will flush and remove toxic gases and introduce fresh air for the infant to breathe. By attaching the ventilation system directly to the sleeping area the ventilation system can be made much smaller with a greatly reduced air flow, as compared to a standard room fan or ceiling fan. Thus, the invention allows for a quieter and more comfortable sleeping area for an infant.

[0012] This invention allows for a low cost solution to removing toxic gases from an infant's sleeping area, by using small, readily available components such as fans, power supplies, blade guards and supports, and applying them directly and in very close proximity to an infant's breathing space. With this configuration, the ventilation system can concentrate the flow and directly force the toxic gases from an infant's breathing area. The invention, as described herein, may reduce or eliminate the main, and perhaps only, cause of SIDS, suffocation and asphyxiation caused by the re-breathing of carbon dioxide. Although the primary use of this invention is to improve the health of infants by providing a healthier environment, it also has extensive uses for older adults, infirm patients and even healthy adults desiring a better, healthier sleeping environment.

[0013] This invention may overcome the safety hazard caused by the use of plastic or impervious crib barriers, often called "bumpers" used to enclose the sleeping area of the infant. Additionally, the invention may overcome the safety hazards introduced by the home and hospital use of plastic bassinets that may incorporate plastic covered, raised sides that trap carbon dioxide gas within the bassinet breathing space. This invention may increase safety by providing low voltages, low currents, a guarded ventilation system, safety indicator lights to indicate malfunction, and other alarms.

[0014] This invention provides a very low cost solution by using small, readily available components and applying them directly and in very close proximity to the breathing space near the infant's head, where it can directly monitor breathing air quality. Thus, the invention may help reduce or eliminate SIDS by monitoring and alerting for one of its causes: Oxygen deprivation and/or CO2 induced suffocation or asphyxiation.

[0015] In one embodiment, this invention provides a remote monitoring system, which allows greater freedom and mobility of the supervising adult while enabling better monitoring of the infants breathing air. The invention allows sensing without the use of connecting wires or cables in the crib with their attendant strangulation hazards. The invention may incorporate a microphone, transmitter, and/or a receiver to alert a parent of infant distress and allow two-way communication.

[0016] The invention may monitor several gas levels such as O2, CO2 or even smoke simultaneously. The invention may further monitor air quality and provide feed back signals to control fan output, that uses low voltage, typically 9 volt battery or less and low current typically 0.10 amp or less for inherent safety. The invention may also use indicator lights and sounds to indicate unsafe conditions, and to awaken and startle the baby causing crying with attendant, increased breathing.

[0017] In at least one embodiment, a sensing device may be enclosed in an infant friendly enclosure for unobtrusive acceptance, such as a teddy bear or other stuffed animal, for example, that can be placed close to the infant and be accepted by the infant or baby. The baby may even become attached to the toy/sensing device. In at least one embodiment, a pocket sized or wearable receiver may be provided for an adult to use to verify baby sleep area conditions and/or baby distress signals such as crying. Additional readouts may be provided to the adult remote such as air quality, temperature, and other important conditions.

BRIEF DESCRIPTION OF THE DRAWINGS

[0018] FIG. **1**A illustrates a side view of an exemplary embodiment of the ventilation system on an infant's crib.

[0019] FIG. **1**B illustrates a front view of the exemplary embodiment of the ventilation system in FIG. **1**A.

[0020] FIG. **2**A illustrates a front view of an alternative embodiment of the ventilation system showing the foot of an infant's bassinet.

[0021] FIG. **2**B illustrates a side view of the ventilation system on an infant's bassinet.

[0022] FIG. **2**C illustrates a rear view of the ventilation system showing the head of an infant's bassinet.

[0023] FIG. **3**A illustrates a side view of a further embodiment of the ventilation system attached to a car seat.

[0024] FIG. **3**B illustrates a front view of the ventilation system attached to a car seat, showing the head of the car seat.

[0025] FIG. **4** shows a schematic view of an exemplary power source for the ventilation system.

[0026] FIG. **5** illustrates an alternate power source for the ventilation system.

[0027] FIG. **6**A illustrates a front view of an exemplary mounting technique for the ventilation system.

[0028] FIG. **6**B illustrates a side view of the exemplary mounting technique for the ventilation system.

[0029] FIG. **7**A illustrates a front view of the ventilation system.

[0030] FIG. **7**B illustrates a side view of an alternate technique for mounting the ventilation system.

[0031] FIG. **7**C illustrates an isometric view of an exemplary embodiment of the controls for the ventilation system.

[0032] FIG. **8**A illustrates a front view of an exemplary embodiment of the sensing device of the ventilation system.

[0033] FIG. **8**B illustrates a front view of an exemplary embodiment of the sensing device of the ventilation system within an enclosure.

[0034] Before the embodiments of the invention are explained in detail, it is to be understood that the invention is not limited in its application to the details of construction and the arrangement of the components set forth in the following description or illustrated in the drawings. The invention is capable of other embodiments and of being practiced or being carried out in various ways. Also, it is to be understood that the phraseology and terminology used herein are for the purpose of description and should not be regarded as limiting. The use of "including" and "comprising" and variations thereof is meant to encompass the items listed thereafter and equivalents thereof as well as additional items and equivalents thereof.

DETAILED DESCRIPTION OF THE INVENTION

[0035] The invention is generally depicted in FIG. **1**, but may be embodied in various forms. Referring to FIG. **1**A, a ventilation system **10** is shown attached to an infant's sleeping area, such as a crib **100**. The ventilation system **10**, as

illustrated in FIGS. **6**A and **6**B, may include a mounting system, a low speed fan **605**, a filter **660**, a support frame **670**, and blade guards **665**, which provide fresh air flow while maintaining a safe environment for those coming into contact with the ventilation system **10**.

[0036] Referring back to FIG. **1**A, the sleeping area, such as a crib **100**, may include several ventilation systems **10** arranged in various positions. The ventilation systems **10** may be mounted in any suitable position around the sleeping area. For example, a ventilation system **10** may be mounted on the end of a crib and pointed downwards towards an infant's face. Additionally, ventilation systems **10** can be positioned on the side of a crib **100**, between slats on a crib **100**, or at the head of a crib **100**, as illustrated in FIGS. **1**A and **1**B, and positioned towards an infant. Any number of ventilation systems **10** may be contemplated within the scope of this invention.

[0037] As illustrated in FIGS. **1**A and **1**B, air flow openings **110** may be incorporated into the invention to aid in the removal of toxic gases from an infant's sleeping area. The removal of toxic gases may be accomplished by the ventilation system **10** providing a light air flow through the sleeping area, which pushes toxic gases or pools of toxic gases out through the air flow openings **110**. In one embodiment, the air flow openings **110** may be positioned low in the sleeping area to provide a drain for the gases such as carbon dioxide to escape and be replenished with breathable air. For example, the air flow openings **110** may be located in a crib bumper attached to the sides of the crib **100** above a mattress pad. The use of the air flow openings **110** may cause breathable air to be replenished to the sleeping area even when a fan **605** is not used, because the heavier-than-air carbon dioxide drains out through the bottom portion of the slotted openings and is replenished with fresh air. Also, rising convection air currents are generated by the infant's body heat, especially the head area, and this displaced air is also replenished with fresh air, flowing in through the slots or elsewhere.

[0038] FIGS. **2**A-**2**C illustrate an alternate embodiment of the invention. In FIG. **2**B, a ventilation system **10** is mounted to a bassinet **200** or a bassinet basket. The ventilation system **10** may include any number of ventilation systems **10**, which may be mounted in any suitable position on the bassinet **200**. For example, a ventilation system **10** may be mounted at the head or foot of the bassinet **200**. The bassinet **200** may also include air flow openings **210** to remove the toxic gases and pooling of gases. The air flow openings **210** may be positioned in any suitable manner on the bassinet **200**. For example, the foot **215**, head **225**, and sides **220** of the bassinet may all include air flow openings **210**.

[0039] In one embodiment, the air flow openings **210** are slots in a configuration that precludes blankets and bedding from blocking the air flow openings **210**. For example, the slots may be long openings. In at least one embodiment, the air flow openings **210** are positioned low on the sleeping area. The low positioning of the air flow openings **210** in the bassinet **200** facilitate the draining of toxic gases from the sleeping area with the assistance of gravity, as toxic gases such as carbon dioxide are heavier than air. In this embodiment, the stale air in the bassinet **200** is constantly being flushed and replaced by fresh air, providing a healthier environment for an infant by reducing bacteria and viruses. This invention may be utilized at homes or in maternity wards. For example, the plastic bassinet baskets used in maternity wards to hold newborn infants may include a ventilation system **10** or air flow openings **210** may be added to a bassinet **200** to reduce the pooling of toxic gases in an infant's sleeping area.

[0040] FIGS. **3**A and **3**B illustrate a further embodiment of the invention with ventilation systems **10** mounted to a car seat **300** or a baby carrier. The ventilation systems **10** may be mounted in any suitable position on the car seat **300** for directing air over the sleeping area of the car seat **300**. For example, as illustrated in FIG. **3**B, a ventilation system **10** may be mounted at the head of the car seat **300** and directed over an infant's head. In at least one embodiment, as illustrated in FIGS. **3**A and **3**B, the ventilation system **10** may be powered through a cigarette lighter outlet located in a vehicle. In an alternate embodiment, not illustrated, the ventilation system **10** may be powered by a battery pack. The car seat **300** may also include air flow openings **310** to aid in draining toxic gasses from the car seat **300**. The air flow openings **310** may be located at any suitable position within the car seat **300** to facilitate the draining of toxic gases from the sleeping area inside the car seat **300**.

[0041] FIG. **4** is a schematic of an exemplary embodiment of a low voltage system for powering the ventilation system **10**. The low voltage system **400** may include speed controls **410** for controlling the speed of the fan **605**. The low voltage system **400** may include a battery and charger **420** for powering the ventilation system **10** if the main power fails. The low voltage system may also include a low voltage power source **440** and sensors **430**. In at least one embodiment, the sensors **430** include corresponding alarms. The battery and charger **420** may also power the sensors **430** and the corresponding alarms, in the case of a power failure. The sensors **430** may include any suitable safety alarms with audible and/or visible indication. In at least one embodiment, the sensors **430** include detectors for monitoring the ventilation system **10** such as for monitoring the speed of the fan **605**, fan failure, or a power overload and corresponding alarms. Additionally, the sensors **430** may include environmental alarms such as smoke detectors, carbon monoxide detectors, and temperature sensors that monitor the infant's sleeping area and surrounding environment. The detectors may monitor the temperature of the infant by any appropriate means. For example, the detector may be placed in the infant's clothing to directly monitor the temperature of the infant or the temperature of the infant may be remotely monitored through a device such as an infrared sensing device. The sensors **430** may include any suitable type of alarm, such as LEDs or other warning alarms with local and/or remote annunciation. The ventilation system **10** may be powered in alternate ways, including by a wall receptacle **550**, as illustrated in FIG. **5**.

[0042] Referring back to FIGS. **6**A and **6**B, the fan **605** may use very low voltages and currents known to be intrinsically safe. For example, the voltage may be 12 Volts or less, and the current may be 1/10 Amps or less. The fan guards **665** may be positioned on one or both sides of the fan **605** and may remove the danger of injury if the ventilation system **10** is mishandled. For added safety, the fan blades may be made of any suitable material to prevent injury such as plastic or rubber. A filter **660** may be positioned at the fan inlet and/or outlet and may include a filter medium to filter the air passed through the ventilation system **10** to reduce the particulates flowing out of the ventilation system **10** towards an infant.

[0043] The ventilation system **10** may be mounted to the sleeping areas in any suitable manner. The mounting may occur through a mounting apparatus. In one embodiment, the mounting apparatus, as illustrated in FIGS. **6**A and **6**B, is a

front clamp **610** and a rear clamp **620**. The clamps may include springs **630** and a pivot point **640** to aid in the mounting process by biasing the rear clamp **620**. The mounting system may also include a support **670** attached to the front clamp **610**. The support **670** may also be attached to the fan **605**. A pivot point **645** may allow the ventilation system **10**, including the fan **605** and the support **670**, to pivot and be positioned in different directions in relation to the infant or infant's sleeping area. In at least one embodiment, the ventilation system **10** may be further secured to the crib for safety by other securing means, such as VELCRO®, belts, or straps.

[0044] Alternatively, the mounting apparatus may be a mounting bracket **710**, as shown in FIG. **7**B. In this embodiment, the fan **605** may be attached to the mounting bracket **710** in any suitable manner. For example, the fan **605** may be bolted to the mounting bracket **710**. The fan **605** may be controlled by any suitable fan controls. In one embodiment, the fan **605** is turned on and off by pressing a single button, as illustrated in FIG. **7**C. In an alternative embodiment, the fan **605** may have alternate speeds and be turned on by a knob, as depicted in FIGS. **7**A and **7**B. The fan controls may be positioned in any relevant location. For example, the controls may be located directly on the ventilation system **10** or may be on the positioned on the mounting bracket **710**. The mounting apparatus may be any suitable material for mounting a ventilation system **10** to an infant's sleeping area. For example, the mounting apparatus may be plastic or metal.

[0045] In at least one embodiment, as illustrated in FIG. **8***a*, the ventilation system **10** may further include a sensing device **800** detecting unsafe conditions in the infant sleeping area, as illustrated in FIG. **8**. The sensing device **800** may include several different types of sensors for detecting hazards and alarms to warn of the hazards. For example, the sensing device **800** may include an oxygen sensor, a toxic gas sensor, a carbon dioxide sensor, a temperature sensor, and/or a smoke detector.

[0046] The sensing device **800** may work in conjunction with the fan **605** or may be an independent device. In at least one embodiment, the sensing device **800** may be located within an enclosure **810**. To make the sensing device **800** more acceptable to the infant and parent, the sensing device **800** may be enclosed it in a toy, like a baby doll, teddy bear or stuffed dog. In one embodiment, the sensing device **800** may be sewn into the stuffed toy, as illustrated in FIG. **8***b*. Alternatively, the toy may include pockets so the sensing device **800** may be placed within pocket of the toy. In another embodiment, the sensing device **800** may include a belt, such that the belt may be placed around any suitable object such as a crib slat, teddy bear, baby doll, etc. The enclosure **810** may be positioned in the vicinity of the infants head to sense hazardous conditions, while enhancing acceptance of the sensing device **800** by the child.

[0047] In at least one embodiment, the ventilation system **10** may be housed within an enclosure, such as the enclosure **810**, as depicted in FIGS. **8***a* and **8***b*. In this embodiment, the enclosure **810** may be secured to the infant's sleeping area. For example, the enclosure **810** may be secured to the slats of a crib **100**. The power source **440**, as shown in FIG. **4**, that powers the ventilation system **10** may be further configured for increased safety. For example, the power source **440** may separate from the ventilation system **10** if the enclosure **810** is separated from the infant's sleeping area. The power source **440** may use a bayonet connection, which would allow the power source **440** to be easily separated from the ventilation system **10**. Additionally, the power source **440** may be fastened to the infant's sleeping area to prevent a cord from entering the infant's sleeping area.

[0048] The enclosure **810**, illustrated in FIGS. **8***a* and **8***b*, may be made of any suitable material for coming in contact with an infant, while allowing the air to come in contact with the sensing device **800**. For example, the enclosure **810** may be made of a porous cloth or similar medium to allow air to easily come into contact with the sensing medium readily and with minimum interference.

[0049] In at least one embodiment, the sensing device **800** includes alerts to indicate an unsafe condition in the infant's sleeping area. For example, the sensing device **800** may include alarms that warn of low oxygen, high levels of carbon dioxide or other toxic gasses, or the presence of smoke. The sensing device **800** may further include an alarm that warns of low battery power or loss of power. In one embodiment, the sensors and alarms are mounted in on a small printed circuit board. The sensing device **800** may include both audible and visual alarms. For example, as illustrated in FIGS. **8***a* and **8***b*, the sensing device **800** may include an audible alarm **801** and a visual readout **802**, and/or an LED (not shown).

[0050] The alerts may annunciate at the location of the infant's sleeping area and also, may be transmitted to a remote receiver **820** carried by a parent or an adult supervisor. The remote receiver **820** may allow the parent to perform tasks outside of the immediate vicinity of the infant, while providing safe monitoring of the infant's sleeping area. The remote receiver **820** may allow the parent to be aware of the actual air quality being breathed by the infant. The sensing device **800** may include additional features that allow the parent to listen to the infant and surroundings and be alert of other problems. For example, the remote receiver **820** may include a microphone and transmitter to allow the parent to soothe the child by voice through a speaker incorporated in the sensing device **800** or by another speaker in the location of the infant's sleeping area. The signals transmitted to and received from the remote receiver **820** and the sensing device **800** may be amplified by use of a relay using technology similar to that of a cordless phone, to increase the range and reliability of the network. The relay may use ordinary household power along with a backup battery system to alert in case of household power failure. The relay may reduce the strength of the radio frequency radiation needed in the sensing device **800**, which increases safety, because the sensing device is used near the infant.

[0051] The alarm may be configured to awaken a sleeping infant when unsafe breathing air is detected, causing the infant to cry, which in turn increases the infant's breathing. The alarm may also be configured to notify an adult of unsafe infant sleeping area conditions. In this respect, the alarm may include local and remote alarms. For example, the local alarm may include an audible sound within the infant's sleeping area. Additionally, the sensing device **800** may be configured to use wireless transmission capabilities to signal an alarm or a remote receiver **820** in a different room or area to allow infant monitoring to take place while an adult is doing other tasks. In one embodiment, the remote receiver **820** may be a small pocket-sized or wearable signal receiver that detects and signals alarms to an adult supervisor. In another embodiment, the remote receiver **820** may be a cellular telephone configured to receive and transmit signals from the sensing device **800**.

[0052] In at least one embodiment, if the sensing device **800** detects a hazardous condition, the sensing device **800** transmits signals to the fan **605** to cause the fan **605** to increase fresh air output to the infant. The sensing device **800** may use very low voltage and power in the monitor for intrinsic infant safety. The sensing device **800** may further provide an independent back-up alarm in the event the fan **605** malfunctions.

[0053] There are additional benefits with the use of the ventilation system of the invention. For instance, the breeze from the fan will provide tactile stimulation. Tactile stimulation is known to stimulate and accelerate brain development. Additionally, the fan can have dim lights incorporated into the fan that can serve as night lights. Research from the American Optometric Society has indicated that night lights promote the development of vision. Also, the fan can be positioned in such a way as to blow on "mobiles." Mobiles have various forms, such as light-weight plastic birds or butterflies that can be actuated by wind-up spring driven motors or even small electric motors. The motion of the mobile attracts the attention of the infant so that the infant's vision is stimulated and exercised and caused to develop more rapidly.

[0054] Moreover, the apparatus of the invention may include a speaker and microphone. The speaker can be used to stimulate the auditory organs of the infant. It can be in the form of recordings or live. Sounds such as music, soothing sounds, voices in various languages, mom's voice, and other beneficial or educational sounds can be incorporated. This in turn will cause increased development of the associated parts of the infant's brain.

[0055] There are still other benefits and uses of the ventilation system of the invention. For example, a known method of stimulating the infant is to have the parent walk around the child's bed and talk softly to it. The child hears and sees the parent. This causes the child to follow the parent with its eyes and head. If an infant is touched lightly on a cheek, it will turn toward the touch, perhaps seeking nourishment. An infant will follow a light with its eyes. It will turn its head toward sound. The light breeze from the fan of the invention can induce a similar response.

[0056] One preferred method for stimulating the infant with these devices is to use two of them. One on each side of the baby's bed. The devices are made to alternate between them periodically, such as every two or three minutes, or even at random or adjustable programmed times to keep from tiring the baby. The baby is exposed to tactile stimulation from the flow of air, visual stimulation from the light, and audible stimulation from the speaker or other sound generation device. Perhaps starting on the left side so that he turns his attention to that side. After a time, the right fan, light and sound come on and the left switches off. Thus, the baby is gently stimulated both mentally and physically as he turns from side to side. The devices can be made to alternate in any of a numerous combinations to promote the desired stimulation of the baby.

[0057] A recommended and well adopted method for reducing SIDS is to place the infant on its back when it is in bed. However, the infant tends to get a flat area (sometimes pronounced) on the back of its head. To help overcome this, it is suggested that the baby be given "tummy time" under careful supervision. The use of this invention with two or more assemblies, placed in positions to attract the attention of the infant to different locations, will cause the infant to reposition its head from time to time, helping to eliminate the flat area on the back of its head.

[0058] The fan assembly of the invention can be incorporated into a child-friendly object such as a teddy bear or baby doll. This package would include the fan, sensors, alarms, lights, microphone controls, etc. An alternator could also be incorporated for multiple assembly use.

[0059] Studies of infants that have expired from SIDS have shown a possible correlation in the development of the brainstem and SIDS. This part of the brain is associated with reaction to breathing, carbon dioxide sensitivity, and blood pressure responses. It would seem that in these babies the infant does not respond or react to increasing levels of CO2 by repositioning its head as a more developed infant might. It may be possible to increase or hasten the development of the brain and neck muscles through various sensory stimulation, as descried above. This may further assist in overcoming the incidence of SIDS. In any event, a baby's brain develops in direct correlation to the amount of stimulation that it receives through the various senses. The earlier and more pronounced the stimulus, the faster the development escalates. Early stimulation can result in a very well developed brain as time passes. Since this brain is now capable of learning at a faster rate, it will absorb even more information and accelerate learning even faster and farther, thereby providing a distinct advantage to the mature adult.

[0060] In summary, with the present invention, an infant's sleeping area may be flushed with fresh air, increasing the quality of breathing air. The invention may also provide the benefit of cooling an infant, which may provide a more comfortable environment for the infant and increase the overall health of the infant. The cooling may also reduce the incidence of SIDS. The invention may direct airflow through the sleep area regardless of whether the infant is laying on his or her back or stomach. By reducing the toxic gases through the flow of fresh air and notifying an adult if a hazardous condition exists in the infant's sleeping area, the incidence of SIDS, suffocation, and asphyxiation from breathing toxic gases may be reduced or eliminated. Additionally, the use of the ventilation system, with its various features, can not only reduce the incidence of SIDS by improving ventilation of the sleeping area, it can also have the additional benefits of improving the infant brain by increasing the rate of its development through specific sensory stimulation. It can also eliminate the flat spot caused by sleeping on its back and can produce generally positive improvement on the baby's overall health.

[0061] Variations and modifications of the foregoing are within the scope of the present invention. It should be understood that the invention disclosed and defined herein extends to all alternative combinations of two or more of the individual features mentioned or evident from the text and/or drawings. All of these different combinations constitute various alternative aspects of the present invention. The embodiments described herein explain the best modes known for practicing the invention and will enable others skilled in the art to utilize the invention. The claims are to be construed to include alternative embodiments to the extent permitted by the prior art.

What is claimed is:

1. A ventilation system comprising:

a fan;

a mounting apparatus configured to mount the fan to an infant's sleeping area;

a sensing device including a plurality of sensors for monitoring hazardous conditions in the infant's sleeping area; and

at least one alarm configured to provide notification of a hazardous condition in the infant's sleeping area.

2. The ventilation system of claim **1**, further comprising:

a remote receiver configured to receive signals from the sensing device and provide an alarm if the sensing device detects a hazardous condition in the infant's sleeping area.

3. The ventilation system of claim **1**, wherein the fan includes fan guards positioned on either side of the fan.

4. The ventilation system of claim **2**, wherein the remote receiver receives wireless signals from the sensing device.

5. The ventilation system of claim **1**, wherein the sensing device monitors the oxygen level in the infant's sleeping area.

6. The ventilation system of claim **1**, wherein the sensing device monitors the carbon dioxide level in the infant's sleeping area.

7. The ventilation system of claim **1**, wherein the alarm is configured to provide an audible notification of a hazardous condition in the infant's sleeping area.

8. The ventilation system of claim **1**, wherein the sensing device is enclosed in an infant-friendly enclosure.

9. The ventilation system of claim **8**, wherein the infant-friendly enclosure is a stuffed toy.

10. The ventilation system of claim **1**, wherein the sensing device transmits a signal to the fan to increase a speed of the fan if a hazardous condition is detected in the infant's sleeping area.

11. The ventilation system of claim **1**, wherein the infant's sleeping area may be a crib, bassinet, infant carrier or infant car seat.

12. A ventilation system comprising:

a fan;

a mounting apparatus for mounting the fan on an infant's sleeping area; and

a sensing device including one or more sensors for monitoring the infant's sleeping area,

wherein the sensing device is positioned in close proximity to an infant's head.

13. The ventilation system of claim **12**, further comprising:

a remote receiver configured to receive signals from the sensing device and provide an alarm if the sensing device detects a hazardous condition in the infant's sleeping area.

14. The ventilation system of claim **13**, wherein the sensing device sends signals to increase the speed of the fan if a hazardous condition is detected in the infant's sleeping area.

15. The ventilation system of claim **14**, wherein the sensing device is configured to be enclosed in an infant's toy.

16. The ventilation system of claim **13**, wherein the remote receiver receives wireless signals from the sensing device.

17. The ventilation system of claim **13**, wherein the sensing device monitors the oxygen level in the infant's sleeping area.

18. The ventilation system of claim **13**, wherein the sensing device monitors the carbon dioxide level in the infant's sleeping area.

19. The ventilation system of claim **12**, further comprising:

an alarm configured to provide a local and remote notification of a hazardous condition in the infant's sleeping area.

20. The ventilation system of claim **19**, wherein the infant's sleeping area may be a crib, bassinet, infant carrier or infant car seat.

21. A ventilation system comprising:

a fan;

a mounting apparatus for mounting the fan on an infant's sleeping area;

at least one alarm configured to provide notification of a hazardous condition in the infant's sleeping area;

a sensing device including one or more sensors for monitoring the infant's sleeping area, the sensing device configured to be attached to an infant's toy, wherein the sensing device is positioned in close proximity to an infant's head;

an alarm configured to provide a notification of a hazardous condition in the infant's sleeping area; and

a remote receiver configured to receive signals from the sensing device and provide an alarm if the sensing device detects a hazardous condition in the infant's sleeping area.

22. The ventilation system of claim **21**, wherein the remote receiver includes a microphone and a transmitter allowing two-way communication with the sensing device.

23. The ventilation system of claim **21**, wherein the infant's sleeping area may be a crib, bassinet, infant carrier or infant car seat.

* * * * *