(12) INTERNATIONAL APPLICATION PUBLISHED UNDER THE PATENT COOPERATION TREATY (PCT)

(19) World Intellectual Property Organization
International Bureau

(43) International Publication Date
30 May 2024 (30.05.2024)

WIPO | PCT

(10) International Publication Number
WO 2024/110953 A1

(51) International Patent Classification:
B25J 13/02 (2006.01) *B25J 13/06* (2006.01)
B25J 11/00 (2006.01)

(21) International Application Number:
PCT/IL2023/051125

(22) International Filing Date:
01 November 2023 (01.11.2023)

(25) Filing Language: English

(26) Publication Language: English

(30) Priority Data:
298505 23 November 2022 (23.11.2022) IL

(61) Related by addition to earlier application or grant:
IL 298505 (POA)
Filed on 23 November 2022 (23.11.2022)

(72) Inventor; and
(71) Applicant: **TORJMAN, Niyya** [IL/IL]; 1/17 Menakhem Dunkenblum St., 8450130 Be'er Sheva (IL).

(81) Designated States *(unless otherwise indicated, for every kind of national protection available)*: AE, AG, AL, AM, AO, AT, AU, AZ, BA, BB, BG, BH, BN, BR, BW, BY, BZ, CA, CH, CL, CN, CO, CR, CU, CV, CZ, DE, DJ, DK, DM, DO, DZ, EC, EE, EG, ES, FI, GB, GD, GE, GH, GM, GT, HN, HR, HU, ID, IL, IN, IQ, IR, IS, IT, JM, JO, JP, KE, KG, KH, KN, KP, KR, KW, KZ, LA, LC, LK, LR, LS, LU, LY, MA, MD, MG, MK, MN, MU, MW, MX, MY, MZ, NA, NG, NI, NO, NZ, OM, PA, PE, PG, PH, PL, PT, QA, RO, RS, RU, RW, SA, SC, SD, SE, SG, SK, SL, ST, SV, SY, TH, TJ, TM, TN, TR, TT, TZ, UA, UG, US, UZ, VC, VN, WS, ZA, ZM, ZW.

(84) Designated States *(unless otherwise indicated, for every kind of regional protection available)*: ARIPO (BW, CV, GH, GM, KE, LR, LS, MW, MZ, NA, RW, SC, SD, SL, ST, SZ, TZ, UG, ZM, ZW), Eurasian (AM, AZ, BY, KG, KZ, RU, TJ, TM), European (AL, AT, BE, BG, CH, CY, CZ, DE, DK, EE, ES, FI, FR, GB, GR, HR, HU, IE, IS, IT, LT, LU, LV, MC, ME, MK, MT, NL, NO, PL, PT, RO, RS, SE, SI, SK, SM, TR), OAPI (BF, BJ, CF, CG, CI, CM, GA, GN, GQ, GW, KM, ML, MR, NE, SN, TD, TG).

Published:
— *with international search report (Art. 21(3))*

(54) **Title:** FINGER CONTROL ARRANGEMENT FOR PROCESSING FACILITY

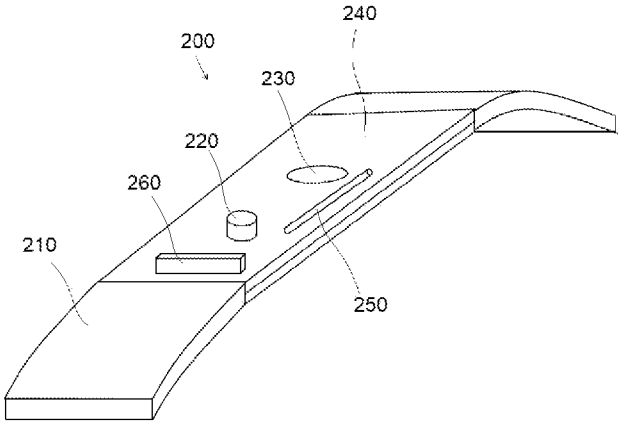

Fig. 2

(57) **Abstract:** A control arrangement for controlling a processing facility by a finger of an operator and for simultaneous processing a workpiece therein being manually holdable by the operator. The control arrangement comprises: (a) a tactile-button for generating the control signals transmittable to the processing facility; the tactile-button disposed in an area of an operator's hand available for pressing the tactile-button by at least one operator's finger; and (b) a controller connectable to the processing facility; the controller configured for receiving the control signals and commanding the processing facility to perform predetermined actions.

WO 2024/110953 A1

FINGER CONTROL ARRANGEMENT FOR PROCESSING FACILITY

FIELD OF THE INVENTION

The present invention relates to industrial equipment and, particularly, to human-machine interfaces, and more particularly, to control arrangement for manually controlled processing facilities.

BACKGROUND OF THE INVENTION

A number of processing facilities such as, a machine cutting details of the sheet type e.g. a guillotine shear or cutting blades or others need to place a workpiece in a manual manner within a processing area and hold the aforesaid workpiece during a processing time period. After that, the processing facility should be activated. If an operator holds the workpiece by both hands, a free limb is usable for activating the processing facility e.g. by a pedal.

In short, the control arrangement of the prior art is too sophisticated, requires individual arrangement, specific means which provide the industrial restrictions for machine operation. The abovementioned problem is mostly relevant to disabled workers.

Hence, there is a long-felt and unmet need for providing a control arrangement for processing facilities concurrently reducing the number of limbs involved into controlling the processing facility and extending controlling capability.

SUMMARY OF THE INVENTION

The main industrial purpose of the invention is to reduce the number of the human limbs used for controlling processing facilities (reduced control), and particularly, to eliminate such controlling components as foot pedal for actuating a machine in the case of having operator's hands busy by holding a workpiece to be processed.

It is hence one object of the invention to disclose a finger control arrangement for controlling a processing facility by a finger of an operator. The processing facility is configured for processing a workpiece being manually holdable by said operator. The aforesaid control arrangement comprises: (a) a tactile-button for generating the control signals transmittable to said processing facility; said tactile-button disposed in an area of an operator’s hand available

for pressing said tactile-button by at least one operator's finger; (b) a controller connectable to said processing facility; said controller configured for receiving said control signals and commanding said processing facility to perform predetermined actions.

Another object of the invention is to disclose the control arrangement comprising a controlling panel carrying said tactile button and means for securing said control arrangement to said area of said operator's hand.

A further object of the invention is to disclose the area which is a carpal delta area.

A further object of the invention is to disclose the at least one operator's finger which is a little finger.

A further object of the invention is to disclose the controlling panel shaped in a bracelet manner and configured for securing said control arrangement to said operator's hand.

A further object of the invention is to disclose the control arrangement wherein said controlling panel carrying ESD facilities and means for securing said ESD facilities to said area of said operator's hand.

A further object of the invention is to disclose the control arrangement comprising a cable interface wherein said cable interface transmittable for said control signals and said ESD.

A further object of the invention is to disclose the control arrangement wherein said cable interface adapted to USB cable.

A further object of the invention is to disclose said control arrangement comprising a display connected to said controller; said display is configured for presenting said menu to be scrolled and items of said at least one feedback corresponding to said signal received by said controller.

A further object of the invention is to disclose a method of processing a workpiece by a processing facility: said method comprising steps of: (a) providing a processing facility; (b) providing a finger control arrangement for controlling said processing facility by a finger of an operator; said processing facility configured for processing a workpiece being simultaneously manually holdable by said operator; said finger control arrangement comprising: (i) a controller connectable to said processing facility and configured for controlling said processing facility; (ii) a tactile button configured for generating at least one control signal transmittable to said controller; said button arrangement attachable to a hand heel of said operator in an area available for pressing said button arrangement by at least one operator's finger; said at least one control signals following by said pressing said button arrangement by at least one

operator's finger are configured for scrolling a processing menu comprising a list of items corresponding to operations and activating an item to be performed; (iii) a display connected to said controller; said display configured for presenting said processing menu and items of said menu activated by said at least one control signal; (c) attaching said control arrangement to said hand heel of said operator; (d) placing said at least one workpiece into a processing area of said processing facility; (e) concurrently manually holding said workpiece within said processing area of said processing facility and pressing said tactile button for generating said control signal transmittable to said controller commanding said processing facility to perform an action selected from the group consisting of: activating said processing facility, selecting a processing operation to be performed with said workpiece and performing said processing operation and any combination thereof; (f) displaying at least one feedback relating to a selecting action; (g) manually removing a processed workpiece from said processing area; (h) recurring steps *d* and *g* as needed.

BRIEF DESCRIPTION OF THE DRAWINGS

In order to understand the invention and to see how it may be implemented in practice, a plurality of embodiments is adapted to now be described, by way of non-limiting example only, with reference to the accompanying drawings, in which

Fig. 1 is a schematic diagram of a finger control arrangement for controlling a processing facility by a finger of an operator;

Fig. 2 is an isometric view of a finger control arrangement for controlling a processing facility by a finger of an operator;

Fig. 3 is a schematic presentation of a human hand;

Figs 4 illustrates concurrently holding a workpiece and pressing a tactile button; and

Fig. 5 illustrates a method for controlling a controller-equipped processing facility by tactile-button according to the invention.

DETAILED DESCRIPTION OF THE INVENTION

The following description is provided, so as to enable any person skilled in the art to make use of said invention and sets forth the best modes contemplated by the inventor of carrying out this invention. Various modifications, however, are adapted to remain apparent to those skilled in the art, since the generic principles of the present invention have been defined specifically to provide a finger control arrangement for controlling a processing facility by a finger of a user and a method of the same.

The present invention is directed to enabling reduced control of industrial facilities. The aforesaid reduced control relates to control of industrial facilities by reduced number of operator's limbs. Contrary to the running practice of manually placing a workpiece within the processing facility and activating it a foot pedal, the reduced control allows processing the workpiece using the reduced number of the operator's limbs. Specifically, the present invention provides an opportunity to concurrently manipulate a workpiece and control the processing facility such as selecting an operation be performed and commanding the processing facility to perform the selected operation.

Reference is now made to Fig. 1 presenting finger control arrangement 100 for controlling a processing facility by a finger of a user. Control arrangement 100 comprises tactile button 20 pressable by operator 10. A signal generated by tactile button 20 is transmitted to controller 30 connected to processing facility 50 by means of a cable interface of e.g. USB type through a plug-and-socket connector. Controlling any industrial equipment or home appliance is in the scope of the present invention. Numeral 40 refers to an indicator configured for informing the operator 10 about the current status of processing facility 50. Operator can be reported by predetermined sound patterns, light signals, images or tactile signals. According to one embodiment of the present invention, indicator 40 is embodied as a display presenting the data relating to the current status of the processing facility. The aforesaid display is configured for showing a graphic user interface (GUI) including a menu of operations to be performed by processing facility 50. Referring to the display, the operator is provided with a real time visual feedback relating to the actions performed by processing facility 50 in response to the signal generated by tactile button 20 is transmitted to controller 30

Reference is now made to Fig. 2 presenting an isometric view of controlling panel 200 attachable to an operator hand (not shown) by means of strap 210 mechanically assembled in split casing of the 240 of e.g. the sandwich type. Tactile-button 220 when pressed by the

operator (not shown) generates an electric signal recognizable by the controller of the processing facilities. According to the invention pressing tactile-button 220 is embodied as a single short pressing or held pressing according to an operation pattern of the processing facilities.

The aforesaid electric signal is converted into a command forcing the processing facility to be activated, perform predetermined operations and be deactivated after performing the aforesaid operations.

The signal sequence recognizable by said controller can issue access to a processing operation list, selecting said processing operation, performing the processing operation or stopping the processing operation.

Back to Fig. 2, the screw 230 performed as coupled screw, touched by a bottom head to the operator's hand and with resistor 250 provides ESD scheme eliminating static electricity affected to the processed workpiece being manually held by the operator. Numeral 260 refers to a plug-and-socket connector of the cable interface for connecting arrangement 200 to processing facility 50 (Fig. 1).

Reference is now made to Fig. 3 schematically presenting a human hand. According to the present invention. Controlling arrangement 200 shown in Fig. 2 is attachable to the Carpal Delta or Hypothenar area such that tactile-button 220 is available for pressing by a little finger of the operator's hand.

Reference is now made to Fig. 4 illustrating the control device attached to the operator's hand. When the controlling device is attached to the Carpal Delta or Hypothenar area of the operator's hand, the tactile-button is available for pressing by the little finger such that the operator controls the processing facility during holding the workpiece within the processing area of the facility. It is obviously if the operator holds the processed workpiece of the sheet type, then the palms are faced upwards.

Applicably extending a capability of the playing the violin technique to be industrialized according to the invention, the operator is able and to hold the processed workpiece without any operable restrictions and simultaneously press the tactile-button 220 by the little finger for controlling the processing facilities.

Reference is now made to Fig. 5 presenting method 300 for controlling a controller-equipped processing facility by tactile-button. The aforesaid method starts with providing a processing

facility and a control arrangement at steps 310 and 320, respectively. Then, the control arrangement is attached to the hand heel of the operator (step 330). After that, the operator displaces at least one workpiece from a storage location into a processing area of the processing facility (step 340). The technical problem solved in the present invention is in enabling a person of limited capacity, for example, paralyzed from the waist down to concurrently hold a workpiece to be processed by both hands and control the processing facility *per se*. Therefore, the operator manually positions the workpiece within the processing area (step 350) according to a processing procedure and electrically controls the processing facility by pressing the tactile button (step 360). Each control signal generated by the tactile button is provided with feedback displayed by an indicator, for example, a display. In an unlimited manner, the feedback is provided in response to a command to activate the processing facility, select an action to be performed and to perform the aforesaid action with the workpiece. According to one embodiment of the present invention, such two manipulating of the tactile button as short pressing and holding pressing confirmed by the corresponding feedback are more preferable. In other words, step 350 is performed in parallel with successively executed steps 360 and 370. After processing the workpiece, it is manually removed from the processing area (step 380). As needed, steps 350 and 360/370 can be repeated in parallel manner.

Certain changes may be made in the above methods and systems without departing from the scope of that which is described herein. It is to be noted that all matter contained in the above description or shown in the accompanying drawings is to be interpreted as illustrative and not in a limiting sense. For example, the devices shown in Figs. 1 through 5 may include different components than those shown in the drawings. The following claims are intended to cover all generic and specific features described herein, as well as all statements of the scope of the present devices, which, as a matter of language, might be said to fall there between.

Claims:

1. A control arrangement for concurrently controlling a processing facility by one finger of the operator's palm and holding a workpiece to be processed therein by other fingers of said operator's palm; said control arrangement comprising:
    a. a tactile-button for generating the control signals transmittable to said processing facility; said tactile-button attachable to carpal delta area of said operator's palm available for pressing said tactile-button by one free operator's finger, therein a little finger of said palm;
    b. a controller connectable to said processing facility; said controller configured for receiving said control signals and commanding said processing facility to perform predetermined actions.
2. The control arrangement according to claim 1 comprising a panel carrying said tactile button and means for securing said control arrangement to carpal delta area of said operator's palm.
3. The control arrangement according to claim 1, wherein said panel is shaped in a bracelet manner and configured for securing said control arrangement to said operator's palm.
4. The control arrangement according to claim 2, wherein said controlling panel carrying ESD facilities and means for securing said ESD facilities to said area of said operator's palm.
5. The control arrangement according to claim 2, the control arrangement comprises a cable interface wherein said cable interface transmittable for said control signals and said ESD.
6. The control arrangement according to claim 5, wherein said cable interface is adapted to USB cable.
7. The control arrangement according to claim 1, wherein said control signals are configured for scrolling a processing menu comprising a list of items corresponding to operations and activating an item to be performed.
8. The control arrangement according to claim 1 comprising a display connected to said controller; said display is configured for presenting said menu to be scrolled and items of said at least one feedback corresponding to said signal received by said controller.

9. A method of processing a workpiece by a processing facility; said method comprising steps of:
    a. providing a processing facility;
    b. providing a control arrangement for concurrently controlling said processing facility by one finger of the operator's palm and holding a workpiece to be processed therein by other fingers of said operator's palm; said control arrangement comprising:
        i. a controller connectable to said processing facility and configured for controlling said processing facility;
        ii. a tactile button configured for generating at least one control signal transmittable to said controller; said button arrangement attachable to a carpal delta area of a palm of said operator for pressing said button arrangement by at least one free operator's finger, therein a little finger of said palm; said at least one control signals following by said pressing said button arrangement are configured for scrolling a processing menu comprising a list of items corresponding to operations and activating an item to be performed;
        iii. a display connected to said controller; said display configured for presenting said processing menu and items of said menu activated by said at least one control signal;
    c. attaching said control arrangement to said carpal delta area of said palm of said operator;
    d. placing said at least one workpiece into a processing area of said processing facility;
    e. concurrently pressing said tactile button by said one finger for generating said control signal transmittable to said controller commanding said processing facility to perform an action and holding a workpiece to be processed therein by an operator in other operator's fingers; said action selected from the group consisting of: activating said processing facility, selecting a processing operation to be performed with said workpiece and performing said processing operation and any combination thereof;
    f. displaying at least one feedback relating to a selected action;
    g. manually removing a processed workpiece from said processing area;
    h. recurring steps *d* and *g* as needed.

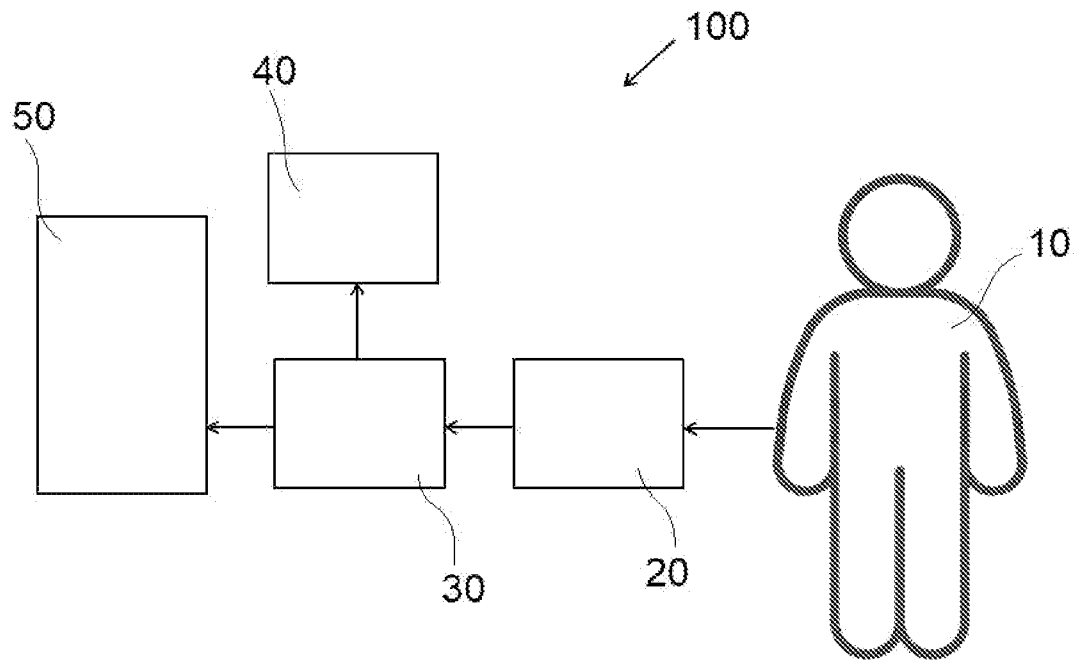

Fig.1

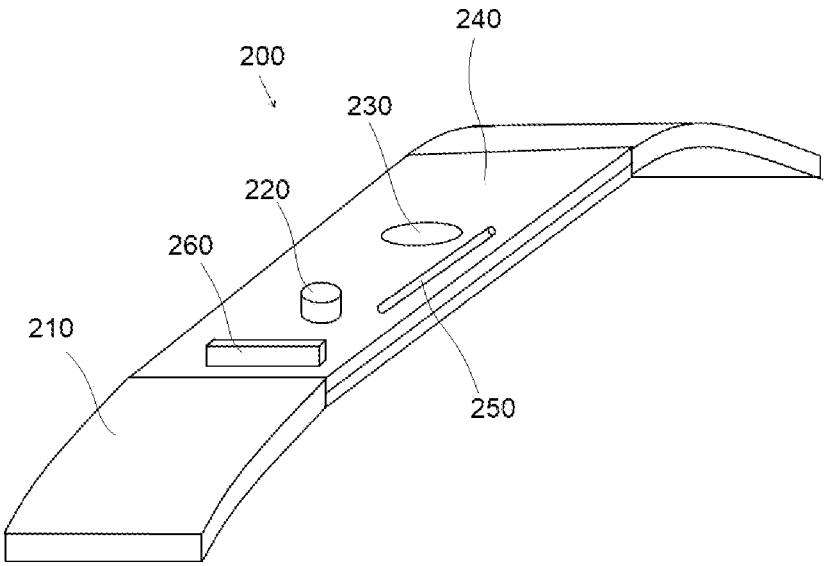

Fig. 2

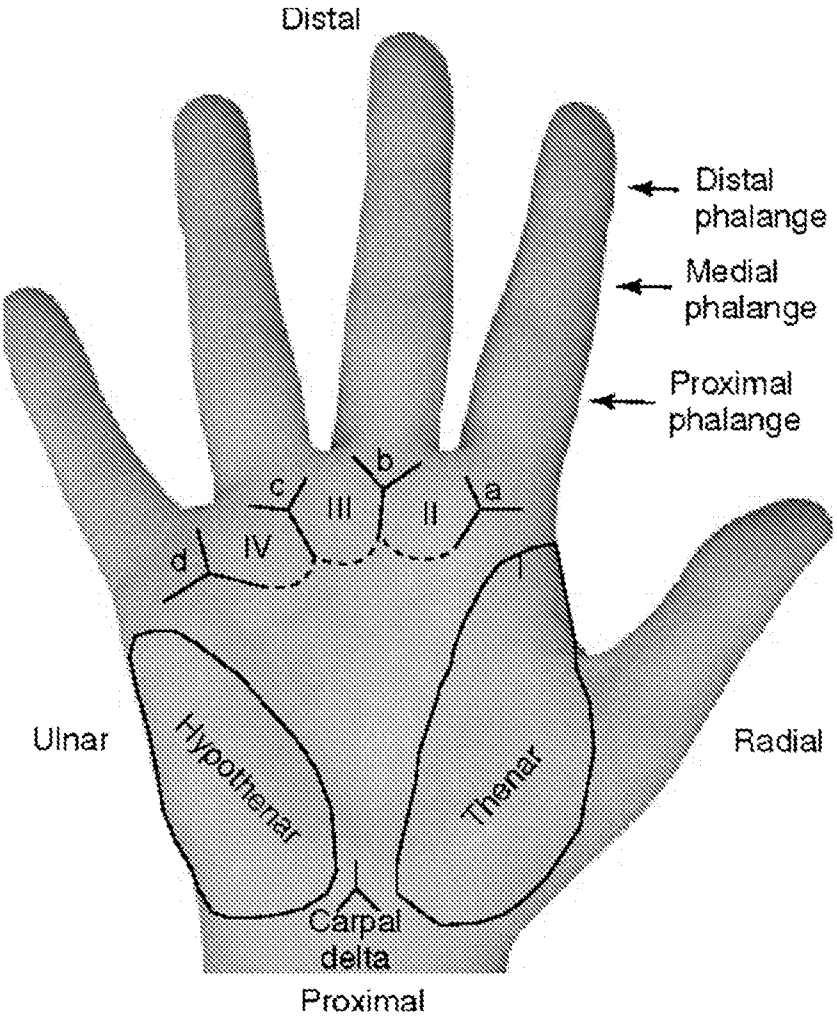
Distal
Distal phalange
Medial phalange
Proximal phalange
a
b
c
d
II
III
IV
I
Ulnar
Radial
Hypothenar
Thenar
Carpal delta
Proximal

Fig. 3



Fig. 4

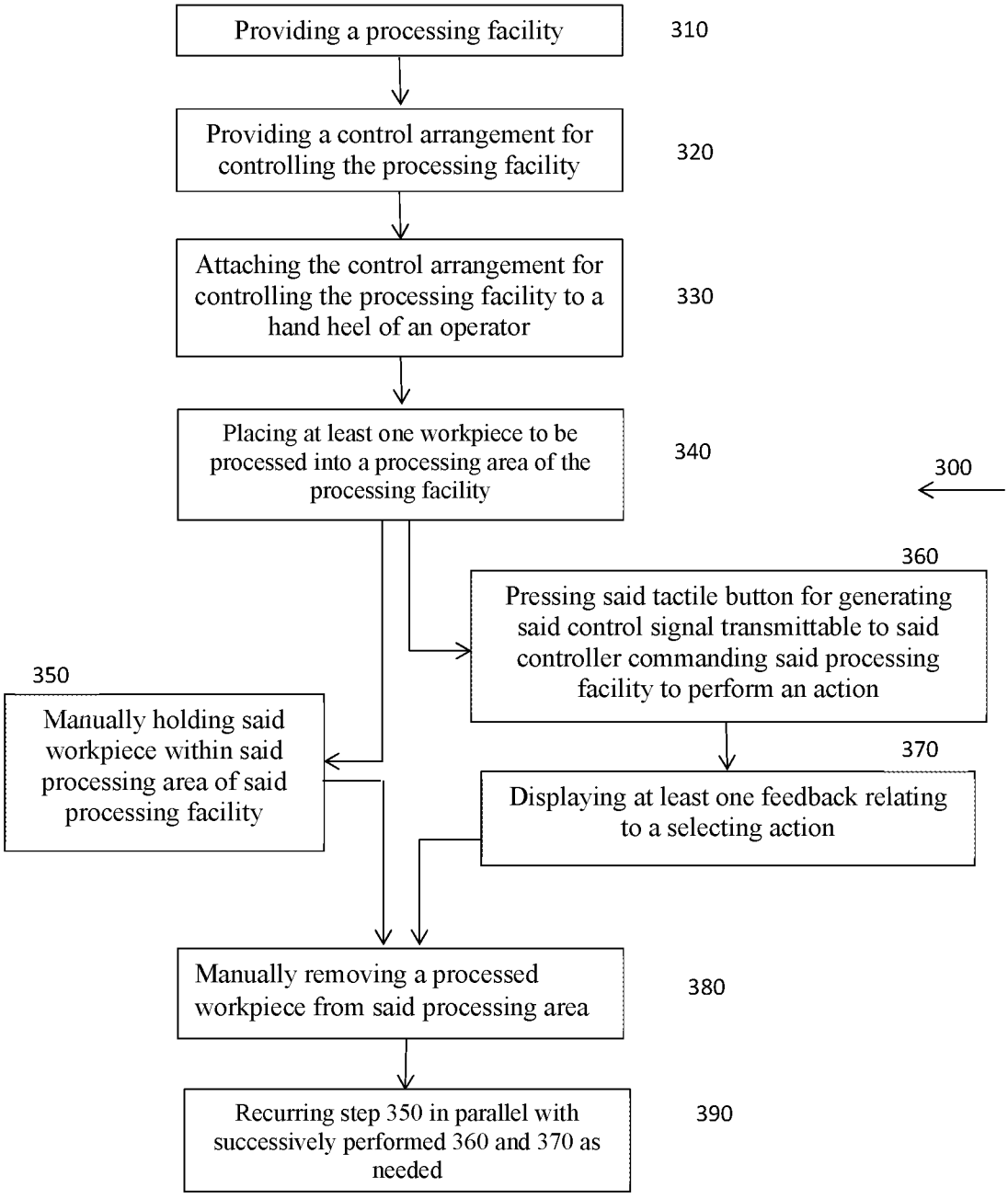
Providing a processing facility
310
Providing a control arrangement for controlling the processing facility
320
Attaching the control arrangement for controlling the processing facility to a hand heel of an operator
330
Placing at least one workpiece to be processed into a processing area of the processing facility
340
300
360
Pressing said tactile button for generating said control signal transmittable to said controller commanding said processing facility to perform an action
350
Manually holding said workpiece within said processing area of said processing facility
370
Displaying at least one feedback relating to a selecting action
Manually removing a processed workpiece from said processing area
380
Recurring step 350 in parallel with successively performed 360 and 370 as needed
390

Fig. 5

INTERNATIONAL SEARCH REPORT

International application No.
PCT/IL2023/051125

A. CLASSIFICATION OF SUBJECT MATTER

B25J 13/02(2023.01)i; ***B25J 11/00***(2023.01)i; ***B25J 13/06***(2023.01)i
CPC:B25J 13/02; B25J 11/005; B25J 13/06

According to International Patent Classification (IPC) or to both national classification and IPC

B. FIELDS SEARCHED

Minimum documentation searched (classification system followed by classification symbols)

B25J 13/02; B25J 11/00; B25J 13/06
CPC:B25J 13/02; B25J 11/005; B25J 13/06

Documentation searched other than minimum documentation to the extent that such documents are included in the fields searched

Electronic data base consulted during the international search (name of data base and, where practicable, search terms used)

Databases consulted: Esp@cenet, Google Patents, Orbit, Similari (AI-based)

C. DOCUMENTS CONSIDERED TO BE RELEVANT

Category*	Citation of document, with indication, where appropriate, of the relevant passages	Relevant to claim No.
A	US 2016144513 A1 (KOBE STEEL LTD [JP]) 26 May 2016 (2016-05-26) Entire Document	1-9
A	US 2005034549 A1 (MANITOU BF [FR]) 17 February 2005 (2005-02-17) Entire Document	1-9
A	US 2022276637 A1 (TRUMPF WERKZEUGMASCHINEN SE CO KG [DE]) 01 September 2022 (2022-09-01) Entire Document	1-9
A	US 2020275985 A1 (INTUITIVE SURGICAL OPERATIONS [US]) 03 September 2020 (2020-09-03) Entire Document	1-9
A	EP 2709803 B1 (KEBA IND AUTOMATION GMBH [AT]) 21 December 2016 (2016-12-21) Entire Document	1-9

☐ Further documents are listed in the continuation of Box C.

☑ See patent family annex.

* Special categories of cited documents:
"A" document defining the general state of the art which is not considered to be of particular relevance
"D" document cited by the applicant in the international application
"E" earlier application or patent but published on or after the international filing date
"L" document which may throw doubts on priority claim(s) or which is cited to establish the publication date of another citation or other special reason (as specified)
"O" document referring to an oral disclosure, use, exhibition or other means
"P" document published prior to the international filing date but later than the priority date claimed
"T" later document published after the international filing date or priority date and not in conflict with the application but cited to understand the principle or theory underlying the invention
"X" document of particular relevance; the claimed invention cannot be considered novel or cannot be considered to involve an inventive step when the document is taken alone
"Y" document of particular relevance; the claimed invention cannot be considered to involve an inventive step when the document is combined with one or more other such documents, such combination being obvious to a person skilled in the art
"&" document member of the same patent family

Date of the actual completion of the international search	Date of mailing of the international search report
21 December 2023	**21 December 2023**

Name and mailing address of the ISA/IL

Israel Patent Office
Technology Park, Bldg.5, Malcha, Jerusalem, 9695101,
Israel
Israel
Telephone No. **972-73-3927243**
Email: **pctoffice@justice.gov.il**

Authorized officer

SABHAT Avraham

Telephone No.

INTERNATIONAL SEARCH REPORT
Information on patent family members

International application No.
PCT/IL2023/051125

Patent document cited in search report	Publication date (day/month/year)	Patent family member(s)	Publication date (day/month/year)
US 2016144513 A1	26 May 2016	US 2016144513 A1	26 May 2016
		US 10780580 B2	22 September 2020
		CN 105619423 A	01 June 2016
		CN 105619423 B	09 November 2018
		EP 3029534 A1	08 June 2016
		EP 3029534 B1	13 February 2019
		JP 2016097482 A	30 May 2016
		JP 6208114 B2	04 October 2017
		KR 20160061266 A	31 May 2016
		KR 101850191 B1	18 April 2018
US 2005034549 A1	17 February 2005	US 2005034549 A1	17 February 2005
		EP 1507184 A2	16 February 2005
		EP 1507184 A3	16 March 2005
		FR 2858861 A1	18 February 2005
		FR 2858861 B1	22 June 2007
US 2022276637 A1	01 September 2022	US 2022276637 A1	01 September 2022
		CN 114730177 A	08 July 2022
		DE 102019131235 A1	20 May 2021
		DE 102019131235 B4	08 September 2022
		EP 4062244 A1	28 September 2022
		WO 2021099138 A1	27 May 2021
US 2020275985 A1	03 September 2020	US 2020275985 A1	03 September 2020
		EP 3709923 A1	23 September 2020
		EP 3709923 A4	11 August 2021
		WO 2019099504 A1	23 May 2019
EP 2709803 B1	21 December 2016	EP 2709803 A2	26 March 2014
		EP 2709803 B1	21 December 2016
		EP 2709803 B2	06 July 2022
		AT 511488 A2	15 December 2012
		AT 511488 A3	15 December 2014
		PL 2709803 T3	31 August 2017
		WO 2012155167 A2	22 November 2012
		WO 2012155167 A3	28 March 2013