Sept. 12, 1939. A. LEVINE ET AL 2,172,767

METHOD OF MAKING PRESS PADS

Filed Aug. 13, 1937

Fig. 1.

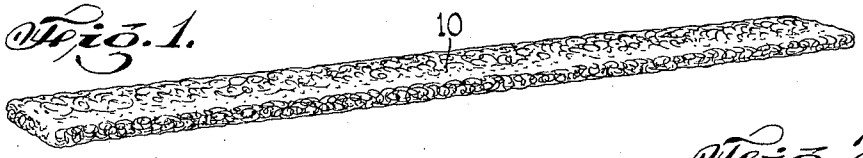

Fig. 2.

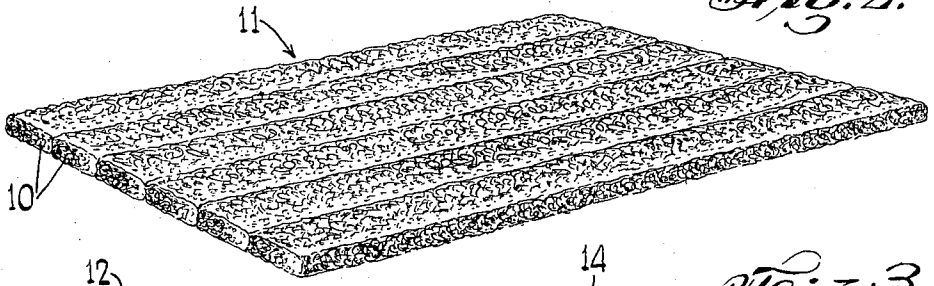

Fig. 3.

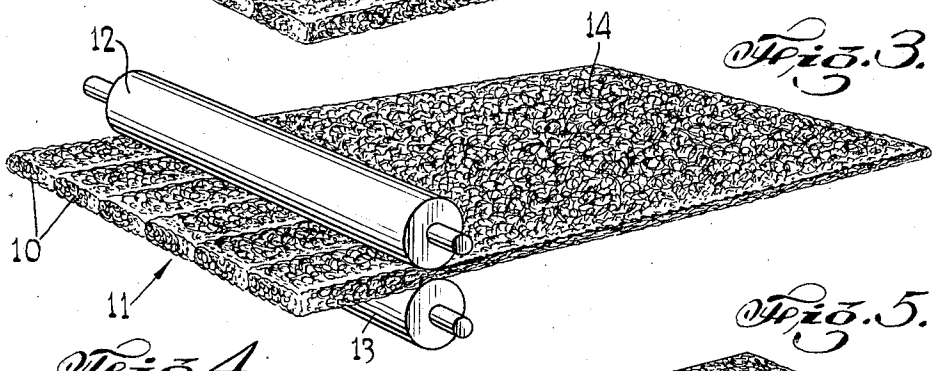

Fig. 4.

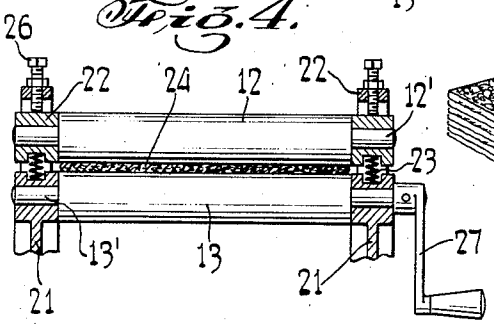

Fig. 5.

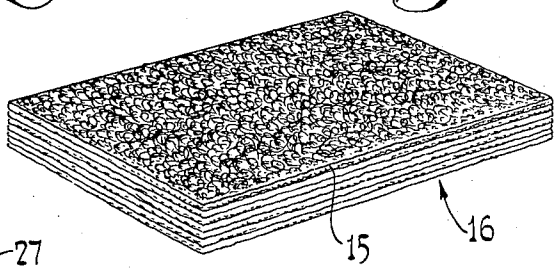

Fig. 6.

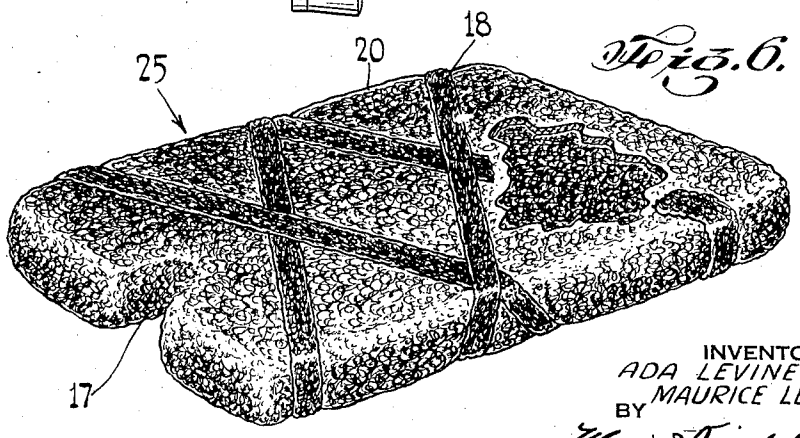

INVENTORS
ADA LEVINE
MAURICE LEVINE
BY
ATTORNEY

Patented Sept. 12, 1939

2,172,767

UNITED STATES PATENT OFFICE

2,172,767

METHOD OF MAKING PRESS PADS

Ada Levine and Maurice Levine, New York, N. Y.

Application August 13, 1937, Serial No. 158,904

6 Claims. (Cl. 140—71)

This invention relates to resilient pads for pressing apparatus. More particularly, this invention relates to an improved press pad of the type usually applied to the ironing surface of a pressing apparatus, and the method of manufacturing the same.

One of the objects of our invention is to provide an improved press pad of the character described which shall be so constructed that the same will retain its resilience for a relatively long period of time and which shall be prevented from unraveling or becoming distorted in shape.

Another object of our invention is to provide a method for the manufacturing of press pads of the character described which shall comprise relatively few and simple steps, which shall be simple and inexpensive to practice and which at the same time shall provide a pad which is highly efficient for the purposes intended.

Other objects of this invention will in part be obvious and in part hereinafter pointed out.

The invention accordingly consists in the features of construction, combinations of elements, and arrangement of parts which will be exemplified in the construction hereinafter described, and of which the scope of application will be indicated in the following claims.

In the accompanying drawing, in which is shown one of the various possible embodiments of this invention,

Fig. 1 is a perspective view of a band of steel wool used in our improved process of manufacture;

Fig. 2 is a perspective view illustrating the method of arranging the bands shown in Fig. 1;

Fig. 3 is a further step in the process of manufacturing our press pads;

Fig. 4 is a cross-sectional view illustrating a form of apparatus employed in the practice of our process;

Fig. 5 is a perspective view illustrating still another step in our novel process; and

Fig. 6 is a perspective view illustrating the ultimate product produced by our novel process.

In press pads of the character described, it is highly desirable that they be constructed so that the material of the pad will always maintain a high degree of resilience and at the same time provide a smooth, non-lumpy surface in order to be suitable as an ironing surface of a clothes pressing apparatus.

By our invention, we have, therefore, provided a novel process of manufacture by means of which we are able to produce a pad possessing the above described advantages, and which at the same time is simple and inexpensive to practice.

Referring now in detail to the drawing, there is disclosed in Fig. 1 a portion of a ribbon or band 10 of a suitable material comprising steel wool or similar metal shavings which have been formed into a continuous band of material of relatively narrow width as shown.

In Fig. 2 there is shown the first step in the practice of our process which comprises the placing of a plurality of ribbons 10 which have been cut to a predetermined size with their longitudinal edges in contiguous relationship to form a substantially rectangular shaped sheet 11.

In Fig. 3 we have shown the next step in the process which comprises passing the sheet 11 thru a pair of rollers 12 and 13, said rollers being under frictional tension and constructed as clearly shown in Fig. 4, and which will be hereinafter more fully described.

It is noted from Fig. 3 of the drawing that as the sheet 11 passes thru the rollers 12 and 13, said sheet will be reduced in thickness to produce the sheet or layer 14 which at the same time presents a practically uniform surface in which the joining edges of the ribbons 10 have been merged due to the pressure of the rollers.

Depending upon the thickness of the ultimate pad desired, a number of the layers 14 are superimposed to form a laminated assembly as shown in Fig. 5, in which it is noted that the layers 14 which are of uniform size are arranged in non-overlapping relationship with each other thus avoiding lumping of the steel wool. When the layers 14 have been superimposed they will extend to a height represented by the line 15 which is substantially the height of the finished pad.

The material of the bands 10 which go to make up the sheets 14 is composed of relatively rough metal shavings in order to provide sufficient body for the ultimate pad 25 as shown in Fig. 6. Since the usual practice is to cover these pads with a fabric material which is adapted to serve as an ironing surface, it is necessary to provide a more smooth finish to the steel wool. Therefore, a top layer 20 of steel wool of a relatively softer composition may be provided and constructed from bands in a manner similar to the construction of the sheets 14 as above described. The top layer also serves the function of binding the sheets 14 together so as to prevent unraveling of the edges.

The laminated assembly 16 shown in Fig. 5 may be shaped to conform to any desirable use such as for example that shown in Fig. 6 which is of

the type suitable for ironing shirts. In this form, it is noted that the edges are rounded off and a notch 17 is provided for the purpose of mounting the pad on the buck.

To retain the top layer or covering of steel wool in position the pad 25 is wound with a criss-cross binding tape 18 which may be of the same material as the top layer.

If desired, a plurality of diagonally arranged bands 10 may be also wound around the laminated assembly 16 to hold the layers 14 together.

In Fig. 4 there is shown one type of construction for the rollers 12 and 13, which comprises a pair of brackets 21 having shafts 13' upon which the roller 13 is fixed, and journalled in said brackets 21. The roller 12 is also mounted on a shaft 12' which is journalled in the brackets 22. The brackets 21 are preferably fixed while the brackets 22 are designed to be adjustably moved with respect to the brackets 21. The springs 23 are provided to normally urge the roller 12 away from the roller 13 to provide a space 24 between the rollers of any desirable width depending upon the thickness to which the sheets 11 are adapted to be compressed. Set screws 26 are provided to adjust the width of the space 24 between the rollers 12 and 13.

It is thus seen from the above described apparatus that when the roller 13 is rotated and a sheet 11 inserted in the space 24 between the rollers, the roller 12 will be caused to rotate due to the frictional contact of the sheet 11 and the roller 12. To facilitate the rotation of the roller 13, there may be provided a suitable rotational means such as a handle 27.

While in the drawing we have illustrated the step of separately passing each sheet 14 thru the rollers 12 and 13, it is understood that by our invention a plurality of such layers 14 may be first superimposed and then passed thru the rollers 12 and 13 at the same time to be reduced in thickness.

It will thus be seen that there is provided a device in which the several objects of this invention are achieved, and which is well adapted to meet the conditions of practical use.

As various possible embodiments might be made of the above invention, and as various changes might be made in the embodiments above set forth, it is to be understood that all matter herein set forth or shown in the accompanying drawing is to be interpreted as illustrative and not in a limiting sense.

Having thus described our invention, we claim as new and desire to secure by Letters Patent:

1. A method of making resilient pads of metal wool which includes passing a plurality of flat independent sheets of steel wool between a pair of rollers to reduce the thickness of said sheets, arranging said reduced thickness sheets in a stack and binding said stack with a band of steel wool to hold the said layers together without substantially deforming the upper surface of said pad.

2. A method of making resilient pads of metal wool which includes arranging a plurality of relatively narrow independent bands of steel wool with their longitudinal edges in contiguous relationship to form a relatively wide sheet of steel wool and passing said sheet between a pair of rollers to reduce the thickness thereof.

3. A method of making resilient pads of metal wool which includes arranging a plurality of relatively narrow independent bands of steel wool of predetermined length with their longitudinal edges in contiguous relationship to form a relatively wide sheet of steel wool, passing said sheet between a pair of rollers to reduce the thickness thereof, and arranging a plurality of such reduced thickness sheets in a stack.

4. A method of making resilient pads of metal wool which includes arranging a plurality of relatively narrow independent bands of steel wool with their longitudinal edges in contiguous relationship to form a relatively wide sheet of steel wool, passing said sheet between a pair of rollers to reduce the thickness thereof, arranging a plurality of such reduced thickness sheets in a stack, and winding a relatively narrow band of steel wool around said stack to hold the sheets together without substantially deforming the upper surface of said pad.

5. In a method of making resilient pads having several flat independent layers of metal wool, the steps comprising separately passing single flat layers of metal wool between a pair of rollers to reduce the thickness of said layers, said layers being motivated solely by said rollers.

6. In a method of making resilient pads having several flat independent layers of metal wool, the steps comprising separately passing less than the total number of layers of metal wool between a pair of rollers to reduce the thickness of said layers, said layers being motivated solely by said rollers.

ADA LEVINE.
MAURICE LEVINE.