Sept. 25, 1934. S. W. E. ANDERSSON 1,974,731

CONTROL DEVICE FOR FLUID FUEL BURNERS

Filed March 16, 1933 3 Sheets-Sheet 1

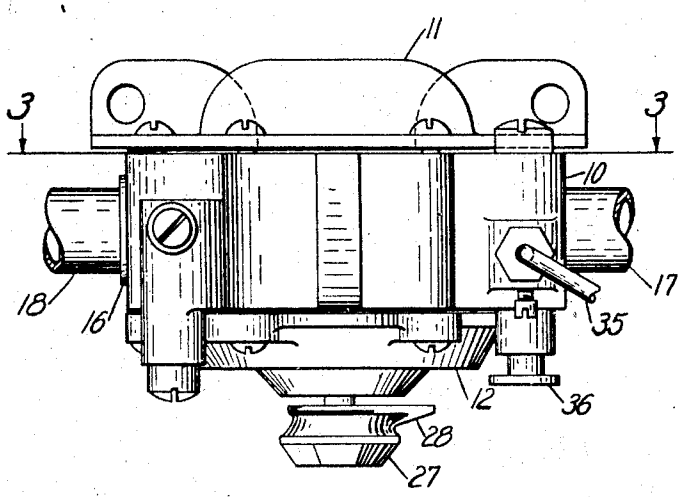

Fig. 2

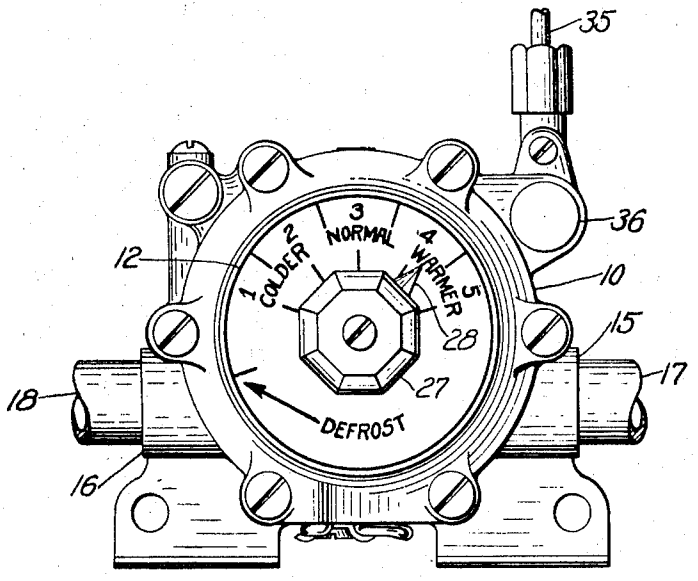

Fig. 1

INVENTOR.
S. W. E. Anderson
BY Ayala Dowell.
ATTORNEY.

Sept. 25, 1934. S. W. E. ANDERSSON 1,974,731

CONTROL DEVICE FOR FLUID FUEL BURNERS

Filed March 16, 1933 3 Sheets-Sheet 2

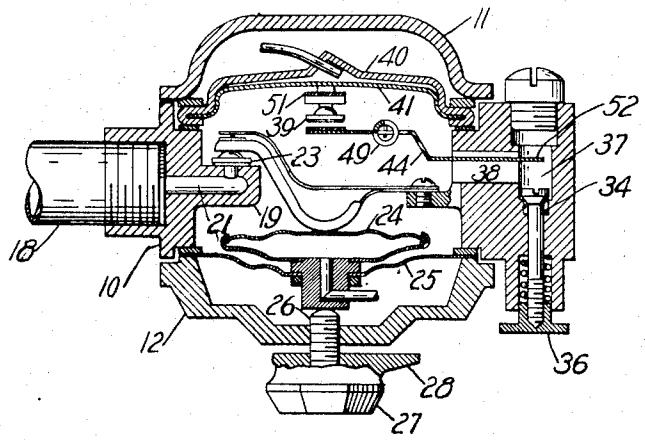

Fig. 4

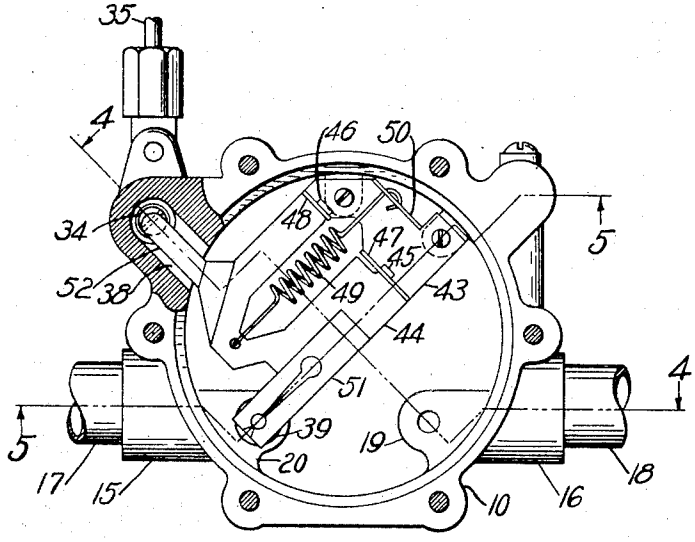

Fig. 3

INVENTOR.
S. W. E. Andersson
BY
Wyatt Dowell
ATTORNEY.

Sept. 25, 1934. S. W. E. ANDERSSON 1,974,731

CONTROL DEVICE FOR FLUID FUEL BURNERS

Filed March 16, 1933 3 Sheets-Sheet 3

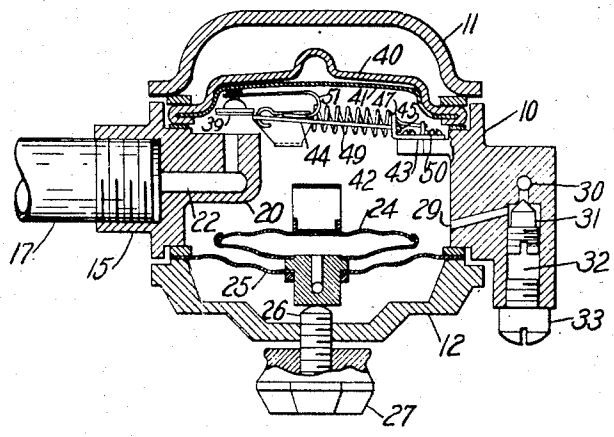

Fig. 6

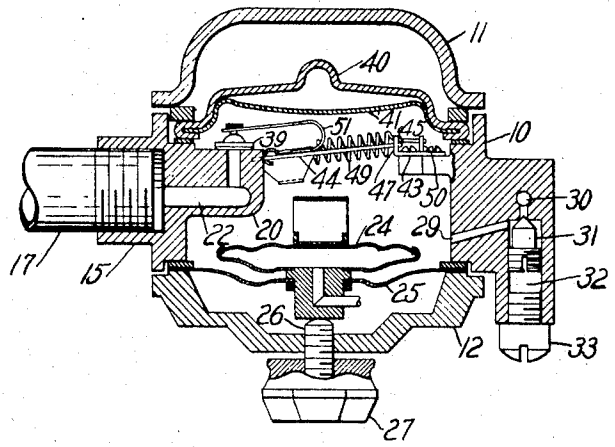

Fig. 5

INVENTOR.
S. W. E. Anderssen
BY
A. Yates Dowell
ATTORNEY.

Patented Sept. 25, 1934

1,974,731

UNITED STATES PATENT OFFICE

1,974,731

CONTROL DEVICE FOR FLUID FUEL BURNERS

Sven W. E. Andersson, New York, N. Y., assignor to Electrolux Servel Corporation, New York, N. Y., a corporation of Delaware

Application March 16, 1933, Serial No. 661,060

7 Claims. (Cl. 236—92)

This invention relates to automatic valves for controlling fluid fuel burners of heat or cold producing machines, and more particularly to control valves for absorption type refrigeration apparatus heated by a gas flame.

Referring briefly to absorption refrigeration apparatus of the pressure equalized type, a solution of refrigerant such as ammonia in an absorption liquid such as water is heated in a generator. The ammonia which is expelled from solution in the form of gas in the generator is liquefied in a condenser, and the liquid vaporized in an evaporator by diffusion into a gas such as hydrogen. The resulting vapor is absorbed from mixture with the hydrogen in water from which ammonia was expelled in the generator, and the cycle is repeated.

The temperature of the evaporator is controlled by varying distillation in the generator, and, when the generator is heated by a gas flame, control is obtained by regulating the flow of gas to the burner. In this type of apparatus it is usual practice to provide a device for cutting off the supply of gas to the burner responsive to a predetermined pressure or temperature rise in the apparatus to prevent increase in pressure above safety limits. There is also provided a thermostatically operated valve for cutting off supply of gas to the burner when the flame is out.

In Patent No. 1,841,136 to Alvar Lenning et al. there is disclosed the above combination of safety devices and in Fig. 4 of this patent is shown a high temperature cut-out valve combined with the temperature responsive gas regulating valve. In my application Serial No. 592,977 filed February 15, 1932, is disclosed a valve arrangement constituting an improvement over that shown in Fig. 4 of said patent to Lenning et al.

When the high pressure or temperature cut-off valve operates to shut off the gas supply to the burner the no-flame safety valve closes, and upon cooling of the apparatus the cut-off valve opens leaving only the no-flame valve closing the gas line to the burner. It has been found that in some instances the no-flame valve does not entirely prevent gas escaping into the room upon opening of the cut-off valve.

It is an object of this invention to provide in a device disclosed in my above mentioned application a cut-off valve which upon operation remains closed until reset to its normal position.

It is a further object of this invention to provide for resetting the cut-off valve upon lighting the burner.

Other objects and advantages will be apparent from the following description taken in connection with the accompanying drawings, in which,

Fig. 1 is a front elevation of the thermostatic control valve contemplated by this invention;

Fig. 2, a plan view of the device shown in Fig. 1;

Fig. 3, a section taken on line 3—3 in Fig. 2;

Fig. 4, a section taken on line 4—4 in Fig. 3;

Fig. 5, a section taken on line 5—5 in Fig. 3 showing the cut-off valve in its operated position; and

Fig. 6, a view similar to Fig. 5 showing the cut-off valve in its open or normal position.

Referring to Figs. 1 and 2 of the drawings, the control device casing comprises an annular body section 10 and covers 11 and 12. The body portion 10 is formed with opposite exterior bosses 15 and 16 which are drilled and threaded to receive conduits 17 and 18. Conduit 17 is for connection to a gas supply line and conduit 18 is for connection to a burner, not shown. As best shown in Fig. 3 the valve body 10 is formed with an internal boss 19 opposite the external boss 16 and a second internal boss 20 opposite the external boss 15. The boss 19 is drilled to form an outlet valve passage 21 as shown in Fig. 4 and the boss 20 is drilled to form an inlet valve passage 22 as shown in Figs. 5 and 6.

The valve passage 21 is controlled by a spring lever valve arrangement 23 as best shown in Fig. 4. This valve is operated by a fluid filled thermostat including an expansible diaphragm 24 mounted on a flexible diaphragm 25. The latter is secured around its edge between the body member 10 and cover 12 to form a fluid tight joint. A screw 26 threaded through the cover 12 and provided with a knob 27 provides an adjustable abutment for the temperature control thermostat bellows 24 and the setting is noted by a pointer 28 on the knob 27 cooperating with a suitable index on the cover 12 as shown in Fig. 1.

As shown in Figs. 5 and 6, passages 29 and 30 drilled in the body member 10 afford a by-pass around the control valve 23 from the interior of the casing to the valve passage 21, which by-pass is adjusted for minimum burner flame by a valve member 31 accessible for adjustment from the exterior of the casing through an opening 32 which is closed by a cap screw 33.

As shown in Figs. 3 and 4, a push valve 34 controls communication between the interior of the casing and a conduit 35. The latter is for connection to the burner, not shown, so that gas may be by-passed around a no-flame safety

valve, not shown, when it is necessary to light the burner. The valve 34 operated by a push button 36 will be herein referred to as the burner lighter valve. This valve is reciprocable in a well 37 drilled in the body member 10 and communicating with the interior of the casing through a passage 38.

Referring to Fig. 6, the valve passage 22 is controlled by the normally open valve member 39 which is operated by a spring tensioned toggle mechanism hereinafter described. The expansible element 40 of a second fluid filled thermostat is provided with a flexible diaphragm 41 and is secured around its periphery between the cover 11 and body member 10 of the casing. The element 40 and flexible diaphragm 25 form with the body member 10 a gas tight chamber 42. In this chamber directly under the thermostat element 40 is mounted a spring tensioned toggle for operating the cut-off valve 39.

As shown in Figs. 3 and 6, the toggle comprises a fixed member 43 formed by a plate secured to bosses on the interior of the body member 10. A substantially U-shaped lever 44 is pivoted against flanges 47 and 48 of the fixed member, being retained in operative relationship therewith by lugs 45 and 46 extending from the ends of the leg portions through corresponding slots in the flanges. Between the legs of the lever 44 is a spring 49 secured at one end to a flange 50 on the fixed member 43 and at the other end to the curved portion of the U-shaped lever 44. The arrangement just described is merely a suitable form of a snap-acting toggle which is well known for operation of switches and valves.

On one end of the toggle lever 44 is secured a spring lever 51 carrying at its outer end the cut-off valve member 39. In one position of the toggle the spring lever 51 is bought up against the flexible diaphragm 41 of the thermostat element 40. This is the open and normal position of the valve as illustrated in Fig. 6. Upon a predetermined rise in temperature corresponding to increased pressure in some part of the system being controlled, the flexible diaphragm 41 bulges outwardly shifting the spring lever 51 and toggle lever 44 past dead center of the toggle whereupon the latter, under the tension of spring 49, snaps the valve member 39 to its closed position over valve passage 22. This is the closed or operated position of the valve as illustrated in Fig. 5. The flexible diaphragm 41 of the thermostat element 40 is preferably of the snap action type so that the whole movement of the valve 39 from its normal to operated position is made substantially instantaneously when the predetermined upper temperature limit is reached.

When the thermostat diaphragm 41 returns to its normal position the valve 39 remains closed, being retained in this position by the toggle previously described. In order to relight the burner it is necessary to reset valve 39 to its normal or open position. This may be done by any suitable arrangement which is preferably manually operable. However, since it is necessary to operate the burner lighter valve 34 in relighting the burner I prefer an arrangement whereby the cut-off valve 39 is reset upon manipulation of the burner lighter push button 36. As shown in Figs. 3 and 4 an arm 52 extends from the toggle lever 44 through passage 38 into the burner lighter well 37. When the push button 36 is manipulated to open the burner lighter valve 34 the latter, in opening, engages the member or arm 52 to shift the toggle lever 44 past dead center whereupon it snaps, under the action of spring 49, back to normal position against the flexible diaphragm 41.

It will be obvious to those skilled in the art that various other changes may be made in the construction and arrangement without departing from the spirit of the invention and therefore the invention is not limited to what is shown in the drawings and described in the specification but only as indicated in the appended claims.

I claim:

1. Control mechanism for a fluid fuel burner including, a cut-off valve in the burner supply line, a spring tensioned toggle for operating said valve, a thermostat for shifting said toggle toward its valve closing position, a normally closed burner lighting valve, and means for simultaneously opening said burner lighting valve and shifting said toggle toward its valve opening position.

2. Control mechanism for a fluid fuel burner including, a cut-off valve in the burner supply line, a conduit for fuel to the burner for lighting, a normally closed burner lighter valve in said conduit, a thermostat operative only to close said cut-off valve responsive to increase in temperature, and means whereby said cut-off valve is opened upon operation of said burner lighter valve.

3. A control device for a gas burner comprising, a casing enclosing a gas tight chamber having inlet and outlet passages, a thermostatically operated valve within said chamber for controlling said outlet passage, a cut-off valve within said chamber for controlling said inlet passage, a thermostat operative only to close said cut-off valve, a third passage through said casing, a normally closed valve controlling last said passage manually operable from the exterior of said casing, and means for opening said cut-off valve upon opening of said manually operable valve.

4. A control device for a gas burner comprising, a casing enclosing a gas tight chamber having inlet and outlet passages, a thermostatically operated valve within said chamber for controlling said outlet passage, a cut-off valve within said chamber for controlling said inlet passage, a thermostat operative only to close said cut-off valve, a third passage through said casing, a normally closed valve controlling last said passage, and manually operable means accessible from the exterior of said casing for simultaneously opening said normally closed and cut-off valves.

5. A control device for a gas burner comprising, a casing enclosing a gas tight chamber having inlet and outlet passages, a thermostatically operated valve within said chamber for controlling said outlet passage, a cut-off valve also within said chamber for controlling said inlet passage, a thermostat operative only to close said cut-off valve, and manually operable means accessible from the exterior of said casing for opening said cut-off valve.

6. A control device for a gas burner comprising, a casing enclosing a gas tight chamber having inlet and outlet passages, a thermostatically operated valve within said chamber for controlling said outlet passage, a cut-off valve also within said chamber for controlling said inlet passage, a snap-acting toggle for operating said cut-off valve, a thermostat element for shifting said toggle only toward its valve closing position, a third passage through said casing, a normally closed valve controlling last said passage, and means operable from the exterior of said casing for simultaneously opening last said valve and shifting said toggle toward its valve opening position.

7. A control device for gas burners comprising, a casing enclosing a gas tight chamber having inlet and outlet valve passages, a thermostatically operated valve within said chamber for controlling said outlet passage, a cut-off valve also within said chamber for controlling said inlet passage, a snap action toggle for operating said cut-off valve, a thermostat element for shifting said toggle only toward its valve closing position, a third valve passage through said casing, a normally closed valve controlling last said passage manually operable from the exterior of said casing, and means for shifting said toggle toward its valve opening position upon opening of said manually operated valve.

SVEN W. E. ANDERSSON.