G. C. ANDERSON.

GAME APPARATUS.

APPLICATION FILED MAY 10, 1917.

1,269,995.

Patented June 18, 1918.

2 SHEETS—SHEET 1.

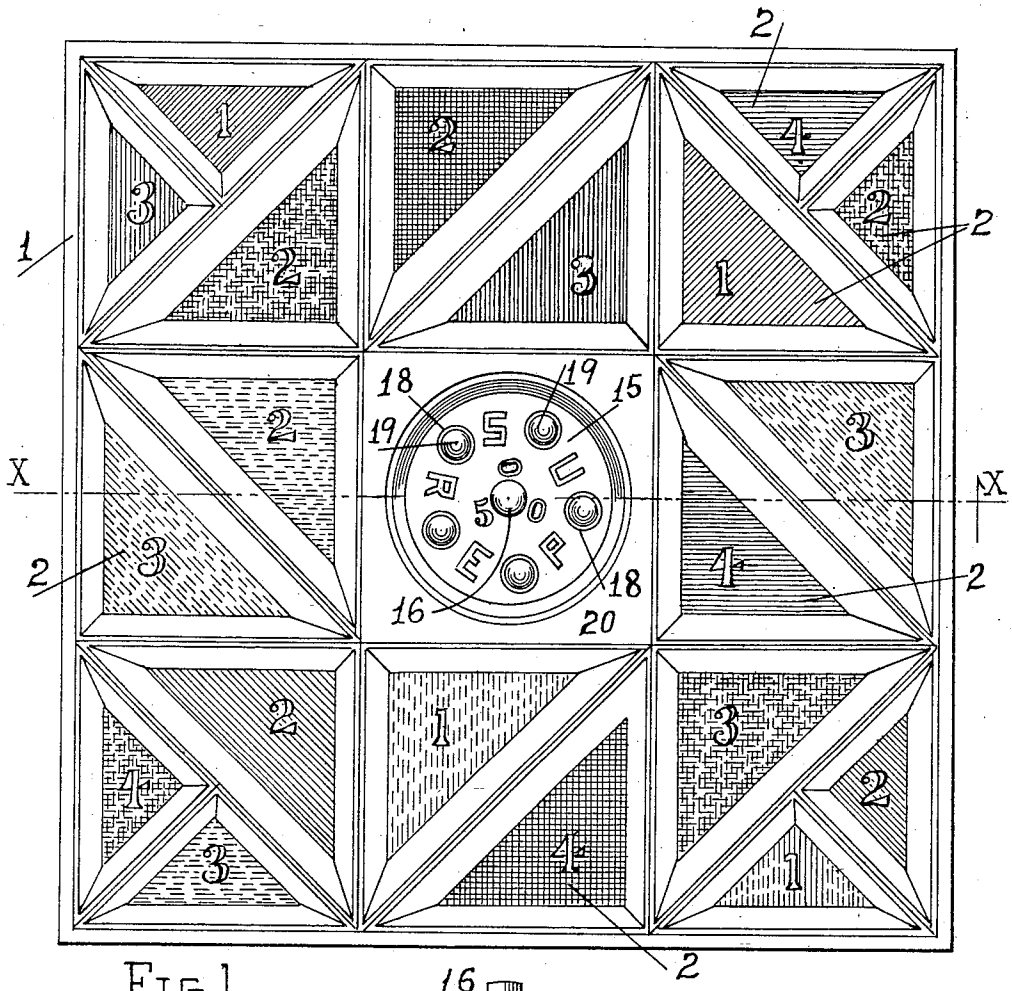

FIG. 1.

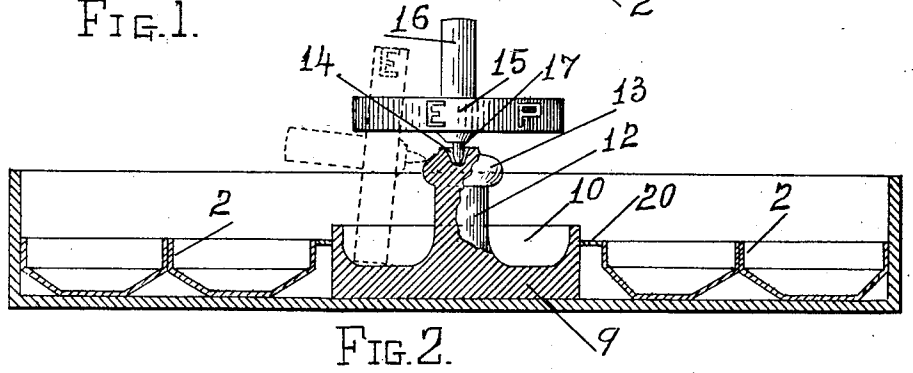

FIG. 2.

Witnesses.
Charlotte DuBois.
Herman Miller.

Inventor.
GEORGE C. ANDERSON.
by Atty. N. DuBois.

G. C. ANDERSON.

GAME APPARATUS.

APPLICATION FILED MAY 10, 1917.

1,269,995.

Patented June 18, 1918.

2 SHEETS—SHEET 2.

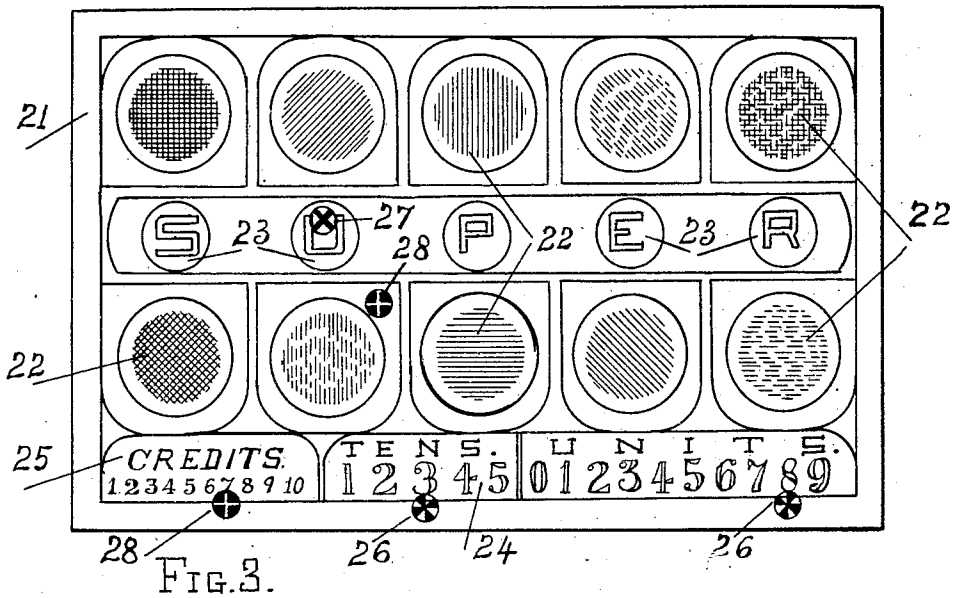

FIG. 3.

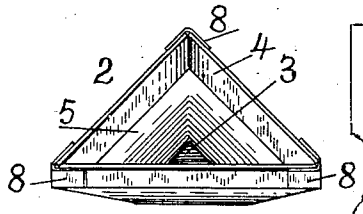

FIG. 4.

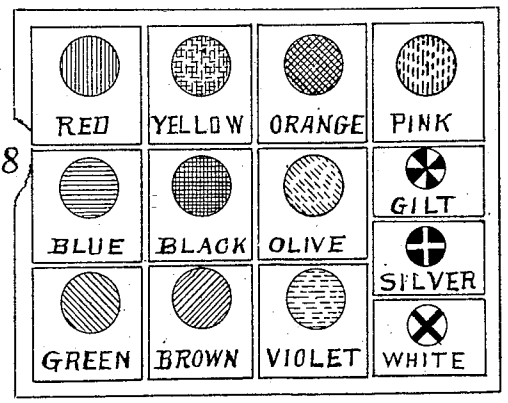

FIG. 7.

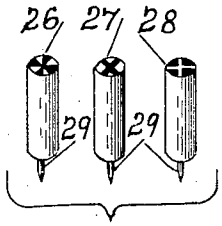

FIG. 6.

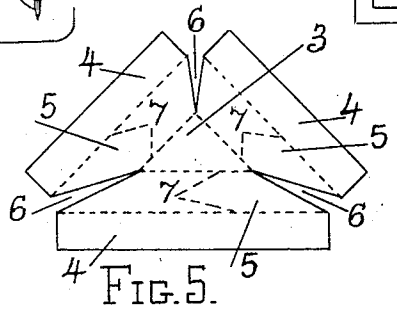

FIG. 5.

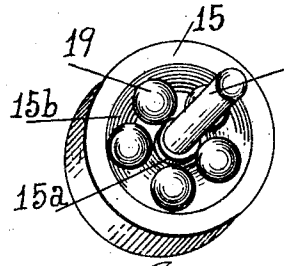

FIG. 8.

Witnesses.
Charlotte DuBois.
Herman Miller.

Inventor
GEORGE C. ANDERSON.
by Atty N. DuBois.

UNITED STATES PATENT OFFICE.

GEORGE C. ANDERSON, OF SPRINGFIELD, ILLINOIS.

GAME APPARATUS.

1,269,995. Specification of Letters Patent. Patented June 18, 1918.

Application filed May 10, 1917. Serial No. 167,689.

To all whom it may concern:

Be it known that I, GEORGE C. ANDERSON, a citizen of the United States, residing at Springfield, in the county of Sangamon and State of Illinois, have invented a new and useful Game Apparatus, of which the following is a specification.

The game apparatus to be hereinafter described, is designed for use in playing a game which I have devised and which I have named "Super 500". To save repetition in the description of the game "Super 500" will be hereinafter designated as,—the game.

The apparatus comprises broadly a game-board, a rotative member which I call a "super", a series of trays, a series of color plaques, a series of movable posts, and other appurtenances; all to be hereinafter described.

The game is designed for the instruction and entertainment of children and adults.

A color scheme is utilized as an interesting feature of the game. The color scheme comprises various arrangements of colored trays on the game board, each tray having a determinate value to be counted in the score; and an orderly arrangement of the same colors on the plaques held by the respective players.

The score posts or indicators also are of different colors and each color on the posts has a significance which will be explained later.

The purposes of the invention are:—to provide a game-board comprising a series of removable colored trays, each tray having a color value and a scoring value; to provide trays of improved construction; to provide a rotative and tiltable element called a "super" adapted to carry spherical counters to be discharged upon the tilting of the super; to provide a column to support the rotative super; to provide a pit adapted to receive and support the super in a vertical position after it has discharged the spheres and left the column and adapted to receive spheres dropped from the tilted super and falling within an area approximately the same as the area bounded by the circumference of the super; to provide a series of color plaques each showing all the colors of the trays and each having scoring fields; and to provide, for use with the plaques, a series of players' posts or indicators adapted to be easily and quickly applied on the different scoring fields of the plaques to exhibit the full and complete score of each player at every stage of the game, without the necessity for using pencil and paper, or other extraneous recording devices.

The invention is illustrated in the annexed drawing and will now be fully described and finally recited in the claims.

Figure 1 is a top plan showing the game-board and the super and the trays in place on the game-board. Fig. 2 is a vertical section on the line X. X. of Fig. 1; Fig. 3 is a top plan of one plaque; Fig. 4 is a perspective view of one detached tray; Fig. 5 is a developed plan of a blank from which the tray is formed; Fig. 6 is a perspective view of one set of movable posts or indicators; Fig. 7 is a conventional graphical showing of the colors used on the trays, the plaques and the posts; and Fig. 8 is a perspective sectional view of a super of modified form.

The same reference numerals designate the same parts in the different views.

A light box 1, of any suitable material, contains the triangular trays 2, preferably of stiff bristol board or similar light, flexible and slightly springy material. The trays are preferably arranged in the box in the order shown, and are preferably colored as indicated; it is to be understood however, that the color scheme admits of the use of variable colors for the trays and the arrangement of the trays in variable relation to each other, so that many various combinations of colors may be attained, according to the fancy of the user.

Except as to size and color, the trays are all alike, so a description of one will suffice for all.

In order that the trays may be produced in large numbers at relatively small cost for material and labor, and in order that the trays may be mailable in the flat in bundles, at a low cost for transportation, each tray will be formed from a blank of bristol board or other thin light material suitable for the purpose.

Each blank (Fig. 5) comprises a triangular central member 3; outside members 4, and intermediate members 5 separated by V-shape spaces 6. At the junctures of the members are lines of minute perforations 7 which weaken the material so that the blank may be easily bent along the lines to give proper form to the tray.

Dies of usual well known construction (not shown) will be used to cut the blanks from sheets of suitable material and perforate the blanks at one operation. Adhesive strips 8 are attached to one end of each member 4 and when the blank is bent to complete the tray, the member 3 will be the bottom of the tray; the members 5 will be the sloping walls of the tray; and the members 4 will be the vertical walls of the tray. When the members are disposed in proper relation to each other the free parts of the strips 8 will be attached to the adjacent ends of the respective members 4, thus completing the tray.

The base 9 is preferably a circular block of white pine, or other light material, and has a circular depression 10, called the pit. A circular column 12 is central to the base and has a circumferential ledge 13 and a central bowl-shape depression 14. The ledge 13 serves to keep the member 15 in an approximately vertical position so that the uppermost letter on the periphery of the member 15 may be noted after the member has ceased to rotate and has slid into the pit 10.

The circular "super" body 15 is preferably of wood and preferably has a series of pockets 18 adapted to accommodate one sphere 19 in each pocket. Instead of having one pocket for each sphere, the body 15 may have a central hub 15^a and a circular groove 15^b, the parts being so proportioned that five spheres in the groove will completely surround the hub, as shown in Fig. 8. The spheres 19 may be of any suitable material, The uses of the spheres will be explained later.

A handle 16 central to the body 15 has a conical spindle 17 adapted to rotate in the depression 14 when the handle is used to rotate the body 15.

A rectangular spacer 20, preferably of cardboard, surrounds the base 9 and fills the space between the base and the adjacent trays, so as to prevent displacement of the trays.

The color plaques.

A plurality of color plaques, one for each player, are accessory to the game board already described which comprises a super adapted to carry five counters, and trays displaying ten colors. Only one plaque, exhibiting ten colors, is shown but it is to be understood that a number of plaques, one for each player, may be used with a single game board. The color plaques are all alike, so a description of one will suffice for all.

Each combination plaque and score card is preferably a thin board 21 of white pine, or other light and soft material, into which the pins of the posts 26, 27 and 28 may be easily pressed and from which they may be easily withdrawn.

I have illustrated a combination plaque and score card showing fields of pleasing forms conveniently arranged, but it is to be understood that the forms and colors of the fields and the positions of the fields of the plaques may be varied to suit each particular case, without departure from my invention. The color fields 22 exhibit the colors, black, brown, red, etc., shown conventionally in the respective fields; the super fields 23 display the respective letters S. U. P. E. R.— which together spell the title-word "Super" of the game Super 500. The apparatus is obviously adapted for playing other games in which combinations or permutations of colors enter as elements, and in such cases the fields 23 may contain other letters or symbols characteristic of the game which is being played.

The credit field 25 contains numbers 1 to 10 inclusive adapted to indicate the number of credits which have been won by the holder of the plaque. The tally field 24 comprises a units section containing units 0 to 9 inclusive, and a tens section containing tens 1 to 5 inclusive, and tens and units together, as indicated by the two gilt posts 26 in the tally sections, exhibit the number of points tallied in that field up to fifty, and as often as fifty points are thus scored in the tally field the silver post 28 in the credit field 25 will be advanced one number.

A plurality of movable posts (Fig. 6) of different colors, in the present instance gilt, white and silver respectively, are accessory to the apparatus. Each apparatus will be equipped with a sufficient number of posts so that each holder of a plaque may be supplied with two gilt tally-posts 26; one for the units section and one for the tens section of the tally field; one white super-post 27; and two silver posts 28, one for the color fields and one for the credit field.

Each post has a cylindrical body and a sharpened pin 29 which may be easily pressed into the body of the plaque to keep the post in upright position on the plaque. To play the game, each player will be supplied with a plaque and a sufficient number of posts. The white post indicates the letter selected by him in his super field; one silver post indicates on the color fields the color selected by him, and the other silver post indicates his credits in the credit field, and the two gilt tally posts indicate his tally in the tally field. After each serving of the super, the person serving will give to the holder of each plaque who has correctly surmised the uppermost number on the super a gilt post 26 to tally in the selected letter field of the plaque; and will give to each holder of the plaque, who has correctly surmised a winning color, a gilt post to tally in the se-

lected color field of the plaque. The method of scoring is as follows:

For example, if in a given game the holder of a plaque has scored say 388 points, a silver post 28 will be stuck in the numeral 7 in the credit field 25 to show in that field that the holder of the plaque is entitled to seven credits each counting fifty points, or 350 points in the field; a gilt post 26 will be stuck in the numeral 3 of the tens section of the tally field 24 to show that the holder is entitled to three tens (30 points) in that section of the tally field; and another gilt post will be stuck in the numeral 8 of units section of the tally field; the reading will then be, 350 points in the credit field plus 30 points in the tens section of the tally field, plus 8 points in the units section of the tally field, making 388 points in all.

At the outset each player will stick his white post 27 in that letter of the word S—U—P—E—R on the plaque which he surmises will be uppermost on the periphery of the super 15 after the super has discharged the counting spheres and has come to rest in an approximately vertical position in the pit 10; next he will stick his silver post 28 in any one of the colors on the plaque which he surmises will be the color of the tray, or trays 2, in which one or more of the counting spheres 19 will finally lodge. Then the player who has the first turn will place the five counter spheres, one in each of the five pockets 18 of the super, and will place the super on the column 12 with the spindle 19 in the depression 14, and will use the handle 16 to rotate the super on the column.

Skill in serving the super may be acquired with a little practice, keeping in mind that a slow even spin is desired. Too violent rotation of the super will cause the counting spheres to fly out of the box.

Upon serving the super its rotary force will gradually diminish and the super will begin to wabble, so that at irregular intervals from time to time, the spheres 19 will leave the pockets 18 and will usually roll into the trays 2; but occasionally a sphere or spheres will drop into the pit 10; and when the super ceases to rotate it will leave the column 12 and drop into the pit and come to rest in an approximately vertical position as indicated by dotted lines in Fig. 2, and the uppermost letter on the periphery of the super, while it is in that position, will be the winning letter and will count 20 points in the score of the player who has placed his white post 27 on that letter on his plaque. After each serving of the super the player serving will score a number of points in the tally field equal to the sum of the numerals of the trays containing counting spheres.

Progressive playing.

To play the game progressively, a suitable number of tables will be provided. The table on which the apparatus is placed will be called table number one, or the head table, and the persons at that table will serve the super in succession. Five persons may be at each table, each playing for himself, or there may be at each table, four persons—two couples—playing partners. If five persons to the table, the player having the highest score at the end of each ten servings of the super will advance to the head table and make the next ten servings of the super, and so on in succession.

If playing partners, four persons to the table, the partners at each table having the highest combined score at the end of each eight servings of the super will advance to another table, according as their combined score compares with the highest combined score of the couples at the other tables, that is to say: the two couples having the two highest combined scores at the close of each eight servings of the super will advance to table number one, the two couples having the two next highest scores will go to table number two, and so on as long as the playing continues.

Counting.

The points in a game, the color values and the super values are as follows:

Fifty points count one credit in the credit field and ten credits in the credit field count one super 500. The player first obtaining one super 500 will be the winner of the game. Each letter S—U—P—E—R has a value of 20 points but that value cannot be placed as a credit in the credit field until the player holding the plaque has a white post 27 on one letter and gilt posts 26 on all the other letters and when he has that the silver post in the credit field will be advanced two credits in that field.

One color may be chosen in advance by the holder of each plaque and if it is among the winning colors at that serving it will count five points, and when ten successful color selections have been made by the player, he will be entitled to 50 points, that is to say—one credit in the credit field. All the players, except the one who in his turn is serving the super, count only five points for each winning color; but if the server chooses in advance one of the colors winning at his serving, he will be entitled to five points for the winning color and an additional number of points equal to the sum of the numerals in the trays receiving counters at that serving; and if there be a counter or counters in the pit, each will count ten points in favor of the server.

Adaptations.

The adaptability of the apparatus for playing other games analogous to Super 500,

in which colors and letters have a counting value has already been mentioned. One example of such adaptation will now be described. The modified game to be played will be called "Rainbow," and the colors having a counting value will be the ten colors shown on each plaque. The letters, S—U—P—E—R also will have a counting value, but the tally fields 24 and the credit field 25 will not be used in playing rainbow. At the outset each player will be supplied with one color plaque, one white post 27 to mark the letter of his choice immediately before each serving of the super and one silver post 28 to mark the color of his choice immediately before each serving of the super. Each player will serve the super in his turn, as already described, and will award a gilt post 26 to each player who has set his silver post 28 on a winning color determined by the color of a tray in which a counter rests; and will also award a gilt post to each player who has set his white post 27 on the winning letter, that is to say, the letter which is uppermost on the member 15 when it comes to rest in its approximately vertical position. The player who first obtains a gilt post on every letter S—U—P—E—R, or who first obtains a gilt post on every color on the plaque, will win the rainbow.

Other adaptations which will readily occur to skilled players need not be detailed here.

Claims.

Having fully described my invention, what I claim as new and desire to secure by Letters Patent is:

1. A game apparatus comprising a box; a column within the box; a member adapted to rotate on the column and having a number of pockets adapted to contain counters and having title letters on its periphery; and a series of trays adapted to receive counters discharged from said pockets during the rotation of said rotative member.

2. In a game apparatus, the combination of a base having a pit; a column central to the pit; a counter-carrying member adapted to rotate and wabble on the column and adapted to come to rest in an approximately vertical position in the pit upon cessation of the rotation of said counter-carrying member.

3. In a game apparatus, the combination of variously colored trays; a counter-carrying member adapted to rotate and wabble to discharge counters into the trays; plaques each having fields of the same colors as the trays; and means for indicating selectively chosen colors on the plaques.

4. In a game apparatus, the combination of variously colored trays; a counter-carrying member having letters of counting value, and adapted to rotate and wabble to discharge counters into the trays; plaques each having the same letters as the counter-carrying member, also having fields of the same colors as the trays; and means for indicating selectively chosen letters and selectively chosen colors on the plaques.

5. In a game apparatus, the combination of variously colored trays; a counter-carrying member having letters of counting value and adapted to discharge counters into the trays; plaques each having the same colors as the trays and the same letters as the counter-carrying member; and means for indicating on the plaques selectively chosen letters, selectively chosen colors and the tally of the holder of each plaque.

6. A plaque for game apparatus having color fields, title-letter fields, a tally field and a credit field; in combination with trays of the same colors as the color fields in the plaque; and a counter-carrying member adapted to discharge counters into the trays.

7. In a game apparatus, the combination of plaques each having color fields, letter fields, a tally field and a credit field; trays of the same colors as the color fields of the plaques; a rotative counter-carrying member adapted to discharge counters into the trays; and movable indicators adapted to indicate on the respective plaques the tally resulting from the distribution of the counters into the trays.

8. A plaque for game apparatus, comprising a plurality of fields, each different from any other; in combination with a plurality of indicators adapted for selective placing on the plaque to indicate, at any stage of the game, the exact score of the player using the plaque.

9. In a game apparatus, the combination of a plaque provided with color fields and letter fields each having a counting value, also provided with a tally field and a credit field; a distinctive indicator for indicating on a color field the player's selection of color; a distinctive indicator for indicating on a letter field a letter selected by the player; and distinctive indicators for indicating in the tally field and the credit field the exact score of the player at any stage of the game.

10. In a game apparatus, in combination with a series of colored trays adapted to receive counters, and means for distributing counters indiscriminately in the trays; a combination plaque and score card exhibiting the same colors as the trays; and characteristic tally-devices complemental to the combination plaque and score card and settable in different positions thereon to show the exact score of the holder thereof at any stage of the game, independently of pencil and paper or other extraneous tally-device.

11. A combination plaque and score card

for game apparatus, comprising various fields of counting value, in combination with characteristic tally devices adapted to be placed selectively in fields of the combination plaque and score card to show the exact score of the holder thereof, at any stage of the game, independently of any extraneous tally-device.

In witness whereof I have hereunto signed my name at Springfield, Illinois, this 5th day of May, 1917.

GEORGE C. ANDERSON.

Witnesses:
S. ALLYNN TROXELL,
W. S. TROXELL.

Copies of this patent may be obtained for five cents each, by addressing the "Commissioner of Patents, Washington, D. C."