March 10, 1964 C. C. PAUL ETAL 3,124,224

METALLIC BUILDING CONSTRUCTION

Filed March 3, 1961 4 Sheets-Sheet 1

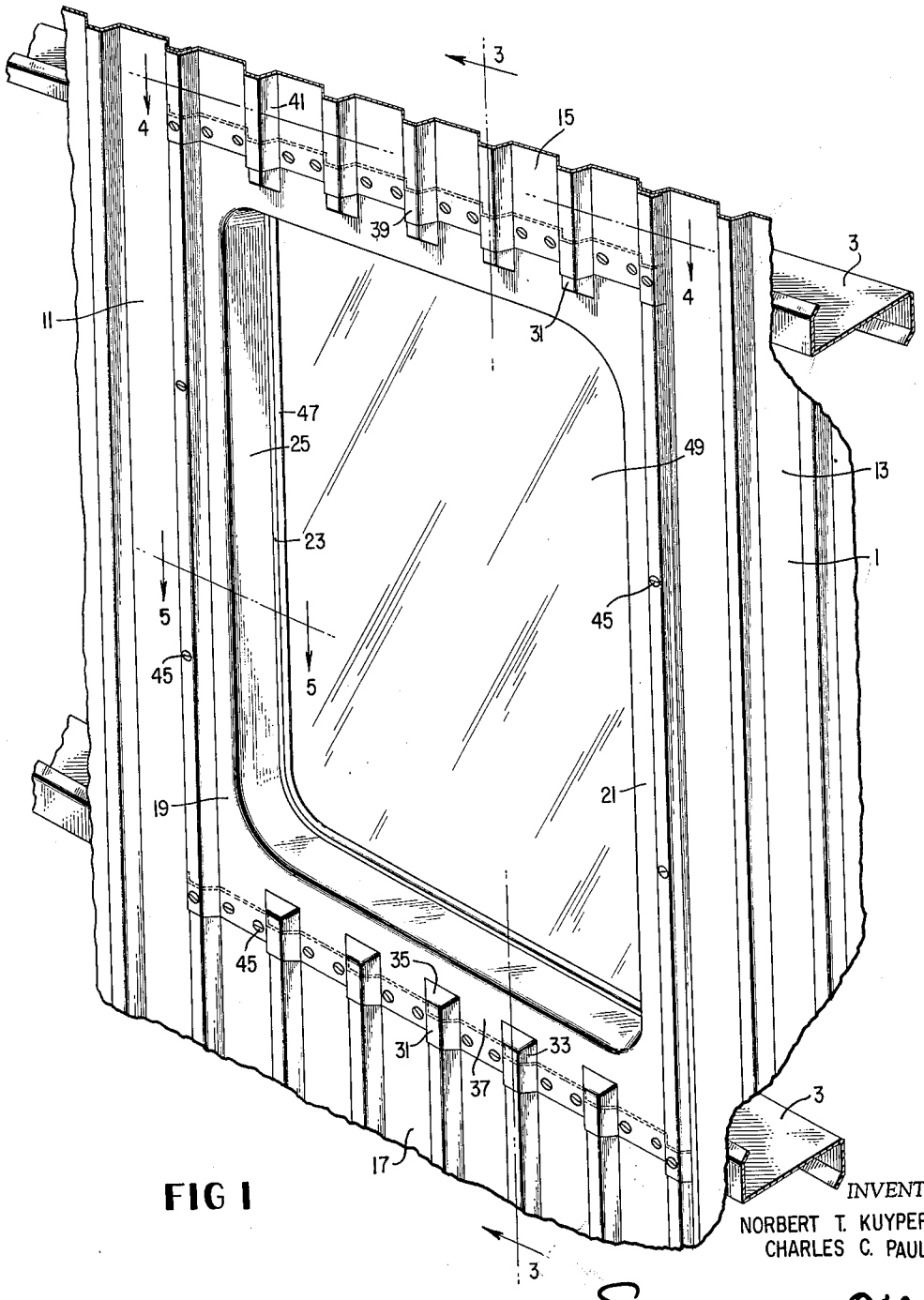

FIG 1

INVENTORS.
NORBERT T. KUYPERS
CHARLES C. PAUL

BY Shanley & O'Neil

ATTORNEYS.

March 10, 1964 C. C. PAUL ETAL 3,124,224

METALLIC BUILDING CONSTRUCTION

Filed March 3, 1961 4 Sheets-Sheet 2

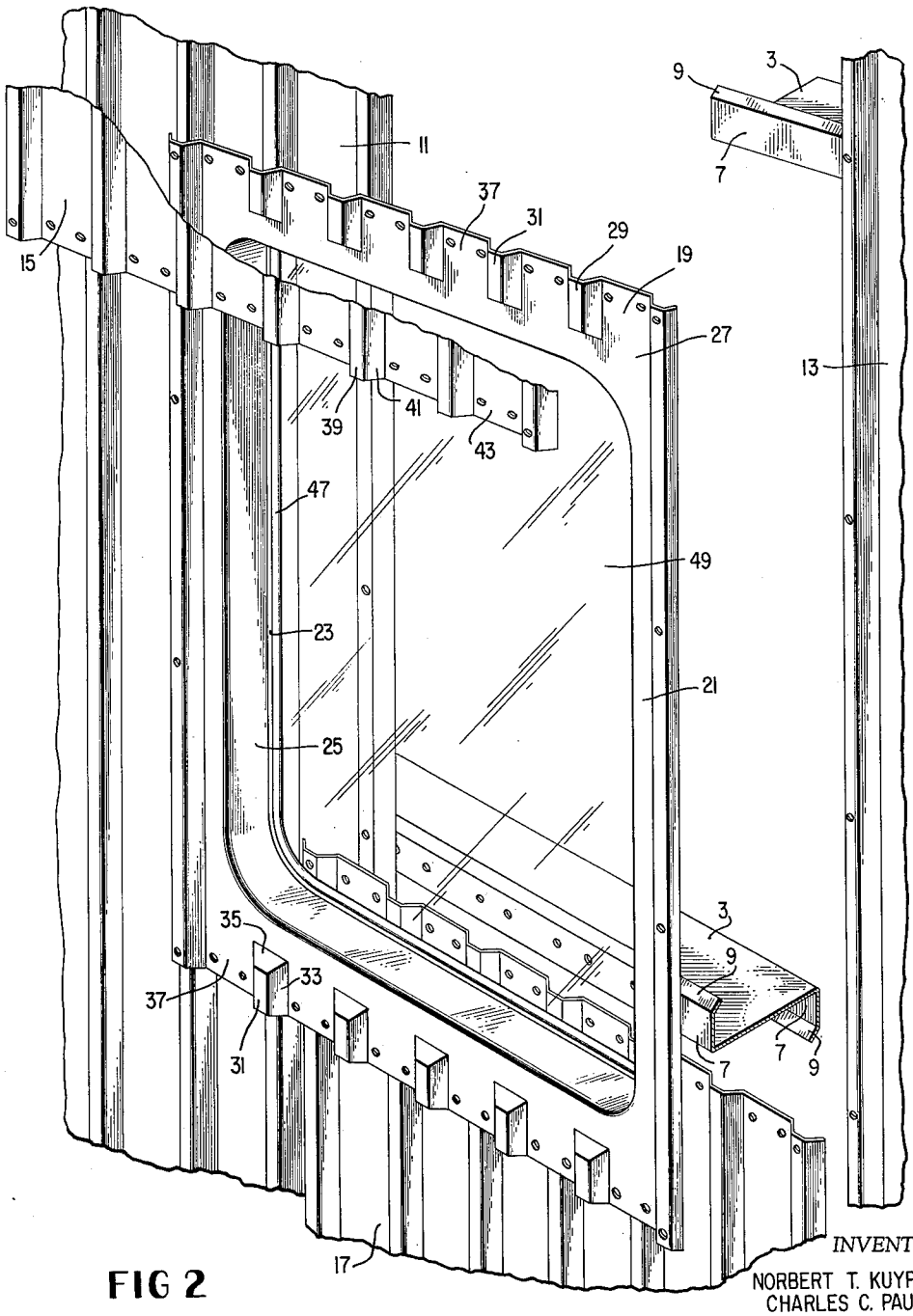

FIG 2

INVENTORS.
NORBERT T. KUYPERS
CHARLES C. PAUL

BY Shanley & O'Neil

ATTORNEYS.

March 10, 1964 C. C. PAUL ETAL 3,124,224

METALLIC BUILDING CONSTRUCTION

Filed March 3, 1961 4 Sheets-Sheet 3

FIG 3

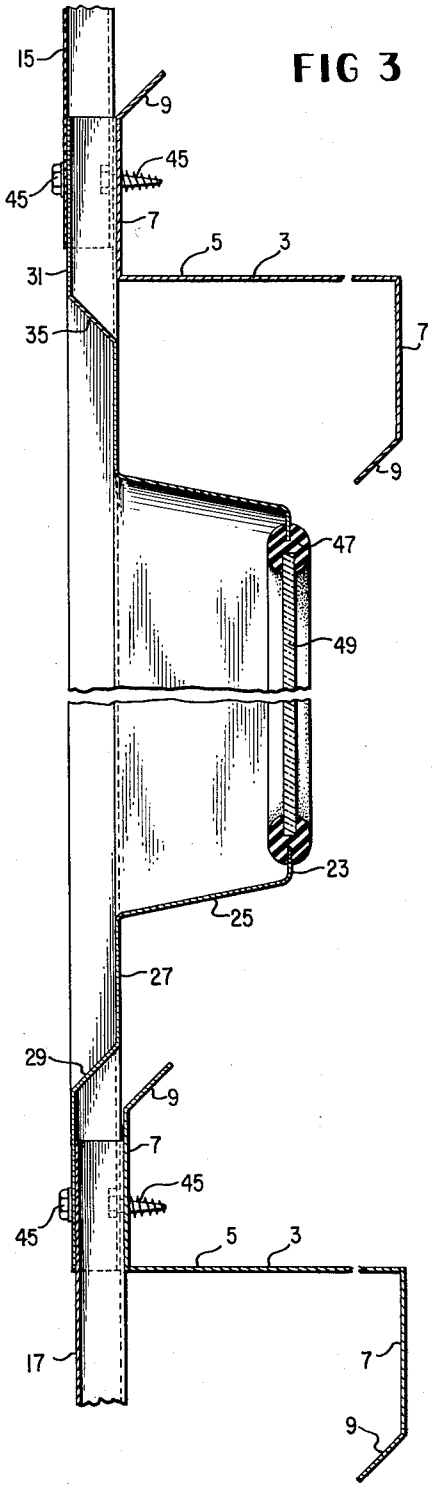

FIG 7

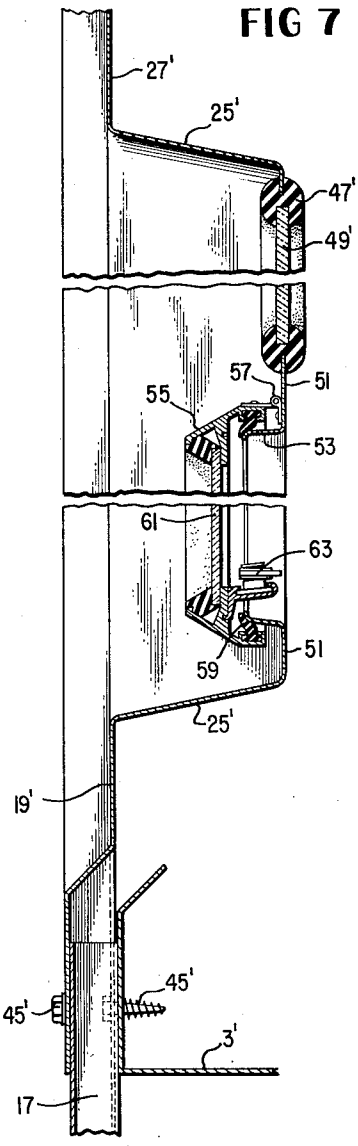

INVENTORS.
NORBERT T. KUYPERS
CHARLES C. PAUL

BY Stanley & O'Neil

ATTORNEYS.

March 10, 1964 C. C. PAUL ETAL 3,124,224

METALLIC BUILDING CONSTRUCTION

Filed March 3, 1961 4 Sheets-Sheet 4

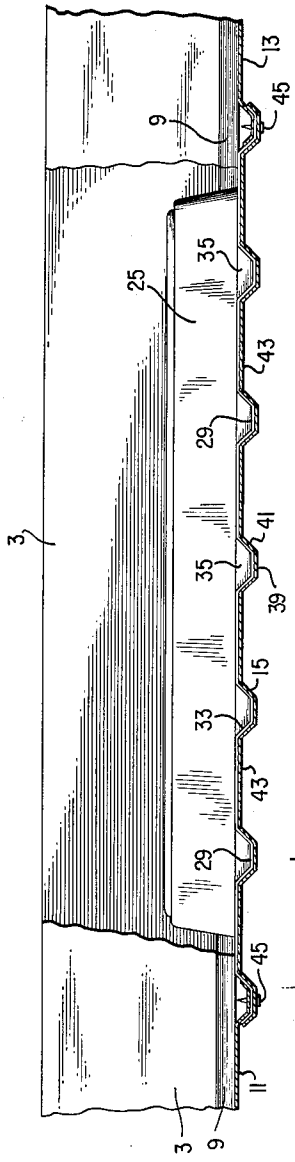

FIG 4

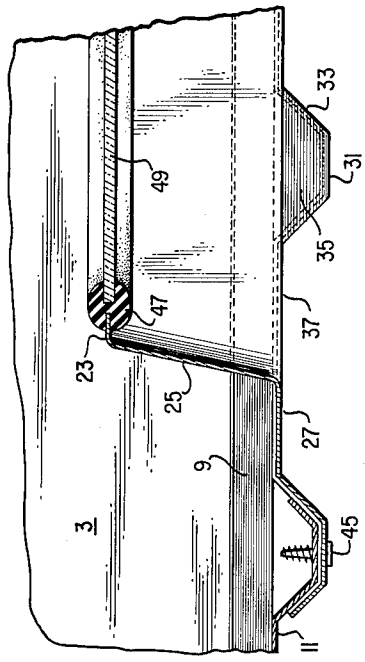

FIG 5

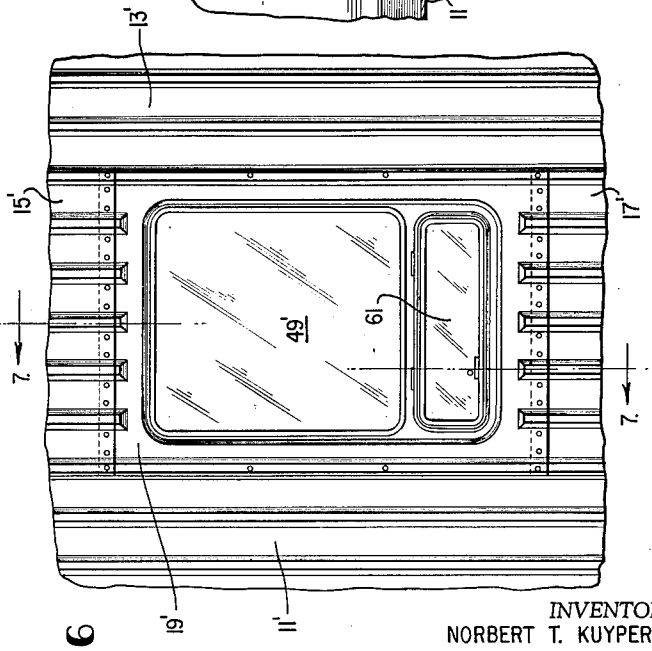

FIG 6

INVENTORS.
NORBERT T. KUYPERS
CHARLES C. PAUL

BY Shanley & O'Neil

ATTORNEYS.

United States Patent Office 3,124,224
Patented Mar. 10, 1964

3,124,224

METALLIC BUILDING CONSTRUCTION

Charles C. Paul, Franklin, and Norbert T. Kuypers, Warren, Mich., assignors to National Steel Corporation, a corporation of Delaware

Filed Mar. 3, 1961, Ser. No. 93,240
18 Claims. (Cl. 189—64)

The present invention relates to metallic building construction, more particularly of the type that includes a metal frame window.

It is an object of the present invention to provide metallic building construction including a metal frame window in which the glass is protected from damage.

Another object of the present invention is the provision of metallic building construction including a metal frame window which is integrated with the remainder of the building construction.

Still another object of the present invention is the provision of metallic building construction including a metal frame window, which, will be relatively easy and inexpensive to manufacture and install and which will be rugged and durable in use.

Finally, it is an object of the present invention to provide metallic window construction characterized by the above desirable features.

Other objects and advantages of the present invention will become apparent from a consideration of the following description, taken in connection with the accompanying drawings, in which:

FIGURE 1 is a fragmentary perspective view, with parts broken away, of metallic building construction according to the present invention;

FIGURE 2 is a view similar to FIGURE 1 but exploded;

FIGURE 3 is a section on the line 3—3 of FIGURE 1, with parts broken away;

FIGURE 4 is a section on the line 4—4 of FIGURE 1;

FIGURE 5 is a section on the line 5—5 of FIGURE 1;

FIGURE 6 is a front elevation of a modified form of metallic building construction according to the present invention; and

FIGURE 7 is a section on the line 7—7 of FIGURE 6, with parts broken away.

Referring now to the drawings in greater detail, there is shown a metallic building construction including a side wall 1 supported at least in part by horizontal girts 3. Girts 3 are of generally Z-shaped configuration and include a horizontal web 5 having along each side edge thereof a vertical flange 7. Flanges 7 are parallel to each other and extend in opposite directions from web 5. Each flange 7 terminates along its edge remote from web 5 in a longitudinally extending lip 9 at an obtuse angle to its associated flange 7. The lips 9 of each girt 3 are parallel to each other and vertically overlie or underlie their associated web 5. Girts 3 are vertically spaced apart and are parallel to each other. The flanges 7 of the vertically spaced girts are coplanar on the outer side of the girts, and the flanges 7 on the inner side of the vertically spaced girts are coplanar, the two planes of the flanges 7 being vertical and parallel to each other.

Side wall 1 is comprised of a plurality of vertically extending metallic side wall sheets of which two are shown at 11 and 13 to the left and right of FIGURE 1, respectively. Sheets 11 and 13 are spaced apart from each other by an upper side wall sheet 15 and a lower side wall sheet 17 in vertical alignment with each other but vertically spaced apart by a gap that extends in a horizontal direction between the adjacent edges of sheets 11 and 13 and in a vertical direction between the adjacent edges of sheets 15 and 17.

Disposed in the gap bounded by sheets 11—17 is a metal frame window 19 comprised of an open sheet metal frame 21 of which central opening is bounded by a uniplanar first frame portion 23 that terminates outwardly in a forwardly extending flange 25 the side walls of which diverge from each other and which is joined to first frame portion 23 by an arcuate portion of metal of relatively small radius. Flange 25, in turn, terminates outward in a shoulder from which extends outward a uniplanar second frame portion 27 the plane of which is parallel to the plane of first frame portion 23. It is important to note that the shoulder and the flange have straight vertically and horizontally extending side portions spaced apart by arcuate corner portions, as this feature lends great rigidity to the window frame.

Second frame portion 27 is provided with a plurality of spaced hollow portions 29 that extend forward of the plane of portion 27 and that terminate forwardly in a plurality of uniplanar flat vertical portions 31 bounded by straight parallel vertical bend lines along which vertical positions 31 are joined to vertical flat sides 33 of hollow portion 29, sides 33 being disposed at oblique angles to vertical portions 31. The hollow portions 29 at the top of the window terminate downward and at the bottom of the window terminate upward in coplanar flat end portions 35 disposed at an oblique angle to vertical portions 31 along horizontal bend lines. End portions 35 of hollow portions 29 are spaced a substantial distance from the shoulder between flange 25 and frame portion 27, and this feature lends an important measure of rigidity to the window as compared to a construction in which that shoulder might comprise one edge of portion 35. It is also important in connection with the rigidity of the window that that distance of spacing be substantially less than the depth of flange 25. Hollow portions 29 are spaced apart by coplanar portions 37 of second frame portion 27, portions 37 being a width substantially greater than the width of hollow portions 29.

The shape of the top and bottom and side edges of frame 21 is complementary to the shape of the sheets 11—17 which bound it. Thus, each of these side wall sheets is provided with a plurality of spaced vertically disposed outwardly extending ridges characterized by flat vertical outermost portions 39 having on either side thereof a pair of oblique flat side portions 41 spaced apart from the adjacent ridge by flat coplanar portions 43 of a width substantially greater than the ridges.

The ridges of the side wall sheets 11–17 mate with hollow portions 29 about the side edges of frame 21. Specifically, upper sheet 15 overlies the upper edge of frame 21 while lower sheet 17 underlies the lower edge of frame 21, with the portions 31, 33 and 37 of the window frame nesting snugly flat against the portions 39, 41 and 43 of the side wall sheets, respectively.

Complementary ridges are provided along the vertical sides of frame 21. These ridges are spaced a substantial distance from the shoulder between flange 25 and frame portion 27 and this spacing lends an important measure of rigidity to the window as compared to a construction in which that shoulder might comprise one edge of the ridge. It is also important in this connection that that distance of spacing be substantially less than the depth of flange 25.

It is very important to note that coplanar portions 37 of the window frame and 43 of the side wall sheets overlap each other in superposed relationship with the outer flanges 7 of the adjacent girts 3. Aligned holes extend through these superimposed portions of coplanar portions 43 and 37 and flanges 7, and screws 45 extend through these holes to integrate the window frame and upper and lower sheets 15 and 17 with girts 3. The

window is thus supported by and between the girts which are immediately above and below it, while at the same time these girts perform the function of integrating the window and side wall sheets in their regions of overlap. It will therefore be appreciated that an important feature of the invention is the flatness of portions 37 and 43, so that they may be secured in a flat stack with flanges 7 thereby to integrate the window and side wall and building frame.

The window closure in the embodiment of FIGURES 1–5 is provided by an elastic deformable glazing strip 47 of rubber or the like which extends entirely about and is overlapped on both sides of the inner marginal edge of first frame portion 23. Glazing strip 47 thus resiliently mounts a flat sheet of glass 49 in the plane of first frame portion 23. It should be noted in this connection that flange 25 is several times deeper than frame portion 23 is wide, as this feature contributes importantly to the rigidity of frame portion 23 and hence to the proper mounting of glass 49. Notice also that the edges of glass 49 are coplanar with but spaced from the edges of frame portion 23, whereby a simple mounting is provided for the glass with smooth continuity between the surface of the glass and the surface of frame 21 so that cleaning of the window is facilitated.

It is also important to note that the common plane of first frame portion 23 and sheet of glass 49 is vertical and is disposed between the planes of the inner and outer flanges 7 of girts 3, so that the glass of the window is protected by the inner flanges 7 from objects that might otherwise strike the window from the inside; while the window is protected in the recess provided by flange 25 from objects that might otherwise strike the window from the outer side.

A somewhat modified form of the present invention is shown in FIGURES 6 and 7 in the environment of a window similar to the first embodiment but provided with a vent for use when it is desirable to open a portion of the window. In this latter embodiment, the first frame portion 23 of the preceding embodiment is replaced by a coplanar first frame portion 51 which is of greater extent than was frame portion 23 and is extended downward a substantial distance below the lower edge of the sheet of glass 49'. Within the confines of first frame portion 51, a flange 53 extends outward between but spaced from both the lower edge of sheet of glass 49' and the lower edge of flange 25'. A closure member 55 cooperates to close the central opening surrounded by flange 53. Closure member 55 is pivotally mounted on first frame portion 51 by means of hinges 57 for vertical swinging movement about a horizontal axis. A gasket 59 encompasses the interior of closure member 55 and contacts the exterior of flange 53 entirely about flange 53 in the closed position of member 55 thereby to seal the opening within flange 53 from the weather. A sheet of glass 61 is carried by closure member 55 in weather-tight relationship so that closure member 55 will be light-transmissive. Latch and prop means 63 are provided for selectively maintaining closure member 55 in closed relationship.

It should be noted that flange 53 is thus disposed entirely within flange 25' and extends to the front a distance substantially less than flange 25' extends to the rear. By this arrangement, a seat for closure member 55 is provided such that closure member 55 may be unlatched and pushed open, but at the same time glass 61 is not positioned so far to the front as to lose the protection of the recess provided by flange 25'. Specifically, the plane of sheet of glass 61 is parallel to but disposed between the planes of first frame portion 51 and second frame portion 27'.

In view of the foregoing, it will be appreciated that all of the initially recited objects of the present invention have been achieved.

Although the present invention has been described and illustrated in connection with preferred embodiments, it is to be understood that modifications and variations may be resorted to without departing from the spirit of the invention, as those skilled in this art will readily understand. For example, although the invention has been illustrated in the first embodiment with no vent and with only one vent in the second embodiment, it will be appreciated that two or more vents may be provided spaced one above the other. Also, girts 3 may be in the more usual form of such members in which lips 9 are parallel to web 5. These and other modifications and variations are considered to be within the purview and scope of the invention as defined by the appended claims.

What is claimed is:

1. Window construction comprising a sheet metal frame surrounding an opening, the frame having a uniplanar first frame portion that defines the border of the opening, a flange extending outward from the first frame portion about the opening and terminating outward in a shoulder, and a uniplanar second frame portion extending from the shoulder away from the opening in a plane parallel to the plane of the first frame portion, the second frame portion having integral spaced hollow portions extending outward of the plane of the second frame portion.

2. Window construction as claimed in claim 1, said hollow portions being spaced apart by portions of the second frame portion of a width greater than the width of the spaced hollow portions.

3. Window construction as claimed in claim 1, said hollow portions having their ends adjacent the opening closed and spaced a substantial distance from the shoulder by portions of the second frame portion.

4. Window construction as claimed in claim 3, the last-named distance being substantially less than the depth of said flange.

5. Window construction as claimed in claim 1, a said hollow portion extending from top to bottom of the frame on each side of the opening, each last-named hollow portion being spaced a substantial distance from the shoulder by a portion of the second frame portion.

6. Window construction as claimed in claim 5, the last-named distance being substantially less than the depth of said flange.

7. Window construction as claimed in claim 1, the shoulder and the flange having straight vertically and horizontally extending side portions spaced apart by arcuate corner portions.

8. Window construction as claimed in claim 1, and means mounting a flat sheet of glass in the opening coplanar with the first frame portion and with the edges of the glass sheet spaced from the first frame portion.

9. Metallic building construction comprising a pair of vertically spaced horizontal girts having outer portions disposed in a common vertical plane, an open sheet metal frame surrounding an opening, the frame having a uniplanar first frame portion that defines the border of the opening, a flange extending outward from the first frame portion about the opening and terminating outward in a shoulder, a uniplanar second frame portion extending from the shoulder away from the opening in a plane parallel to the plane of the first frame portion, the second frame portion having integral spaced hollow portions raised outward of the plane of the second frame portion along the top and bottom of the second frame portion, and means extending through the top and bottom of the second frame portion between the spaced hollow portions and through said outer portions of both said girts and fixedly securing the window construction in unitary assembly with the girts.

10. Metallic building construction as claimed in claim 9, said hollow portions being spaced apart by portions of the first frame portion of a width greater than the width of a spaced hollow portion.

11. Metallic building construction as claimed in claim

9, the girts having inner portions disposed in a second common vertical plane, the plane of the first frame portion being disposed outward of said second vertical plane.

12. Metallic building construction as claimed in claim 9, the girts having inner portions disposed in a second common vertical plane, and means mounting a sheet of glass on the first frame portion outward of said second vertical plane.

13. Metallic building construction as claimed in claim 9, the girts having inner portions disposed in a second common vertical plane parallel to the first-mentioned vertical plane, the plane of the first frame portion being parallel to and spaced between said two vertical planes.

14. Metallic building construction as claimed in claim 9, the girts having inner portions disposed in a second common vertical plane parallel to the first-mentioned vertical plane, and means mounting a uniplanar sheet of glass on the first frame portion parallel to and spaced between said two vertical planes.

15. Window construction comprising an open sheet metal frame surrounding a first opening, the frame having a uniplanar first frame portion that defines the border of the first opening, a first closed flange extending outward from the first frame portion about the first opening and terminating in a shoulder, a uniplanar second frame portion extending from the shoulder away from the first opening in a plane parallel to the plane of the first frame portion, the first frame portion having a second opening

therethrough between the first opening and the first flange, and a second flange extending outward from the first frame portion about the second opening and terminating between the planes of the first and second frame portions.

16. Window construction as claimed in claim 15, and a closure member detachably secured to the second flange and closing the second opening.

17. Window construction as claimed in claim 16, and means hingedly mounting the closure member on the first frame portion adjacent the second flange.

18. Window construction as claimed in claim 15, and means mounting a first sheet of glass in the first opening and a second sheet of glass in the second opening parallel to but forward of the first sheet of glass with the second sheet of glass spaced between the planes of the first and second frame portions.

References Cited in the file of this patent

UNITED STATES PATENTS

2,008,329	Macleod	July 16, 1935
2,123,106	Haberstump	July 5, 1938
2,885,040	Grossman	May 5, 1959
2,905,982	Lenke	Sept. 29, 1959
2,978,995	Dean	Apr. 11, 1961

FOREIGN PATENTS

620,896	Great Britain	Mar. 31, 1949
555,959	Canada	Apr. 15, 1958