(No Model.)

J. G. CHANDLER.

RAILWAY TRUCK.

No. 456,719. Patented July 28, 1891.

Fig. 1.

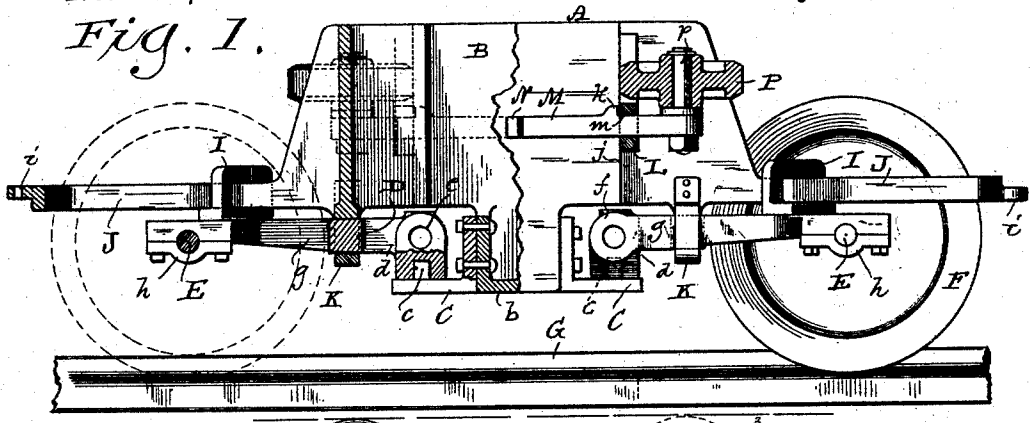

Fig. 2.

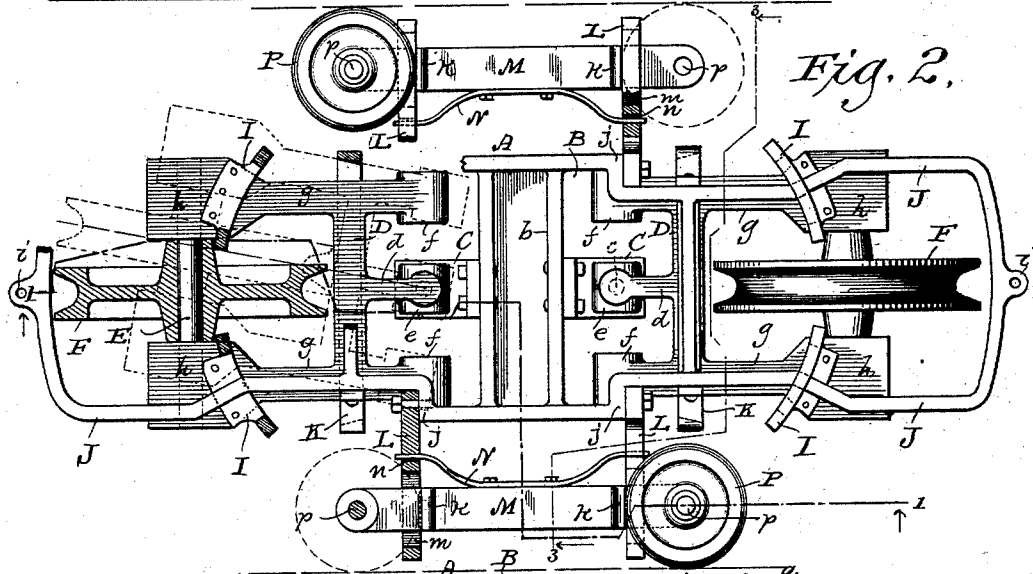

Fig. 3.

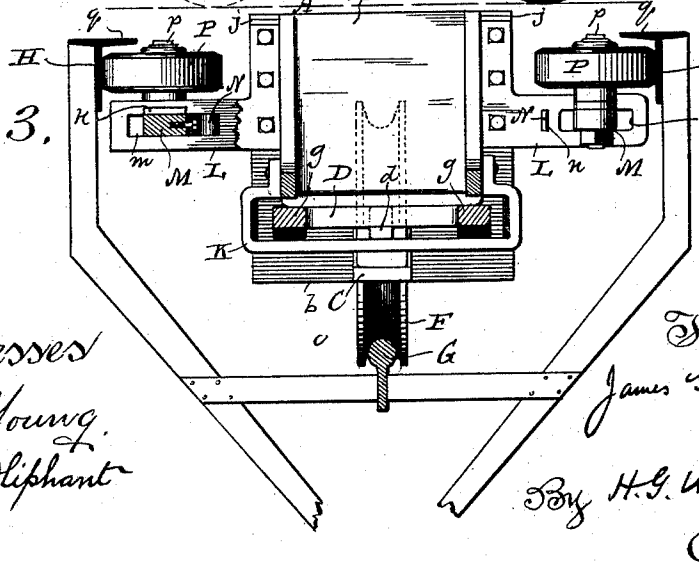

Witnesses
Geo. W. Young.
N. E. Oliphant

Inventor
James G. Chandler
By H. G. Underwood
Attorneys.

THE NORRIS PETERS CO., PHOTO-LITHO., WASHINGTON, D. C.

UNITED STATES PATENT OFFICE.

JAMES G. CHANDLER, OF RACINE, WISCONSIN.

RAILWAY-TRUCK.

SPECIFICATION forming part of Letters Patent No. 456,719, dated July 28, 1891.

Application filed December 2, 1890. Serial No. 373,297. (No model.)

To all whom it may concern:

Be it known that I, JAMES G. CHANDLER, a citizen of the United States, and a resident of Racine, in the county of Racine, and in the State of Wisconsin, have invented certain new and useful Improvements in Railway-Trucks; and I do hereby declare that the following is a full, clear, and exact description thereof.

My invention consists in certain peculiarities of construction and combination of parts, to be hereinafter described with reference to the accompanying drawings, and subsequently claimed.

In the drawings, Figure 1 represents a side elevation of my improved truck, partly in section, on line 1 1 of the succeeding figure; Fig. 2, a plan view of the same, partly in horizontal section; and Fig. 3 a front elevation, partly in section, on line 3 3 of the preceding figure.

Referring by letter to the drawings, A represents the body of my truck, and, as shown, this body is preferably so built as to have a central recessed portion B for the reception of an electromotor or other means (not shown) for communicating power to the truck-axles through the medium of suitable gearing. Bolted or otherwise rigidly connected to opposite sides, front and rear, of a depending portion *b* of the truck-body, are supports C, provided with vertical pivots *c* for engagement with corresponding recesses in the ends of arms *d*, that extend inward from the centers of frames D, these arms being shown as provided with transverse bearings *e*, in line with like bearings *f* in side arms *g* of said frames. The bearings just described are for shafts (not shown) that may be geared to the motive power and to axles E, that have their bearings *h* at the outer ends of the side arms *g* of the pivotal frames. As shown, each axle E is provided with but one wheel F, the truck being especially designed for use in connection with such railways as have a single central base-track G and guide-tracks H on opposite sides of the base-track some distance above the same, as is clearly illustrated in Fig. 3; but said truck may be employed in connection with such railways as comprise two parallel base-tracks, and in the latter instance said axle would be provided with a corresponding number of wheels. In either case the side arms *g* of the pivotal frames are provided with slotted brackets I, that engage bails J, forming front and rear extensions of the truck-body, each bail being centrally provided with a coupling-eye *i*, as best illustrated in Fig. 2, and, as shown in the same figure, the opposing faces of the flanges and wheels are beveled, whereby, in case of contact, the friction will be reduced and said wheels will run on said flanges. The brackets I are set at such an angle and have the slots therein of such length that the frames D are free to swing on their pivots *c*, and thus conform to curves or irregularities in the track on which the wheels F travel, the truck-body A being preferably provided with hangers K, that pass immediately under said frames, as best illustrated in Figs. 1 and 3.

Bolted or otherwise rigidly secured to offsets *j* of the truck-body are lateral arms L, provided with longitudinal slots *m* for engagement with bars M, and fast to these bars are flat springs N, that have their free ends arranged to play in openings *n* in the bars, as best illustrated in Fig. 2, these bars being limited as to longitudinal movement by means of stops *k* thereon. The end of each bar M is provided with a stud *p*, and arranged on this stud is a wheel P, that bears against the adjacent one of the guide-tracks H, above described. The springs N exert their power to force the bars M in an outward direction, and thus the wheels P are always held against the guide-tracks H, but yield to inequalities in the latter, the play of said bars being limited in either direction by the length of the slots with which they are engaged. To prevent the truck from becoming derailed, the guide-tracks H are provided with flanges *q*, that extend inward over the adjacent wheels P, as shown in Fig. 3.

Having thus described my invention, what I claim as new, and desire to secure by Letters Patent, is—

1. A railway-truck comprising a body having longitudinal extensions, axle-carrying frames pivotally connected to the body, and stops on the frames in opposition to said extensions of the body, substantially as set forth.

2. A railway-truck comprising a body hav-

ing longitudinal extensions, axle-carrying frames pivotally connected to the body, and slotted brackets arranged on these frames to engage the extensions of said body, substantially as set forth.

3. A railway-truck comprising a body, hangers depending from the same, and axle-carrying frames pivotally connected to the body and arranged to move on the hangers, substantially as set forth.

4. A railway-truck comprising a body, supports fast on the same and provided with pivots, axle-carrying frames having recessed arms for engagement with the pivots, and suitable means for limiting pivotal movement of said axle-carrying frames, substantially as set forth.

5. A railway-truck comprising a body having a motor-receptacle, axle-carrying frames pivotally connected to the body, and power-shaft bearings forming parts of said frames adjacent to said body, substantially as set forth.

6. A truck comprising a body, frames pivotally connected to the same, wheels having their axles carried by the frames, slotted arms laterally extended from each side of said body, spring-controlled bars arranged in the slotted portions of said arms, and wheels carried by the bars, in combination with a railway comprising a central base-track and two guide-tracks arranged one on each side of the base-track at a certain distance above the same, substantially as set forth.

7. A truck comprising a body, frames pivotally connected to the same, wheels having their axles carried by the frames, slotted arms laterally extended from each side of said body, spring-controlled bars arranged in the slotted portions of said arms, and wheels carried by the bars, in combination with a railway comprising a central base-track and two guide-tracks arranged one on each side of the base-track at a certain distance above the same, and flanges on the guide-tracks extended inward to come over the wheels on said spring-controlled bars, substantially as set forth.

8. A truck comprising a body, frames pivotally connected to the same, wheels having their axles carried by the frames, lateral supports extended from the sides of the body, spring-controlled bars arranged on the supports, and wheels carried by the bars, in combination with a railway comprising a central base-track and two guide-tracks, one on each side of the base-track, substantially as set forth.

9. A truck comprising a body, frames pivotally connected to the same, wheels having their axles carried by the frames, lateral supports extended from the sides of the body, laterally-yielding bars arranged on the supports, and wheels carried by the bars, in combination with a railway comprising a central base-track and two guide-tracks, one on each side of the base-track, substantially as set forth.

10. A truck comprising a body, frames pivotally connected to the same, wheels having their axles carried by the frames, lateral supports extended from the sides of the body, laterally-yielding bars arranged on the supports, and beveled wheels carried by the bars, in combination with a railway comprising a central base-track, two guide-tracks, one on each side of the base-track, and beveled flanges on the guide-tracks extended inward to come over the adjacent wheels, substantially as set forth.

In testimony that I claim the foregoing I have hereunto set my hand, at Milwaukee, in the county of Milwaukee and State of Wisconsin, in the presence of two witnesses.

JAMES G. CHANDLER.

Witnesses:
N. E. OLIPHANT,
WM. KLUG.