O. SIEMEN.

ROTARY PUMP.

APPLICATION FILED APR. 15, 1913.

1,215,881.

Patented Feb. 13, 1917.

2 SHEETS—SHEET 1.

Fig. 2.

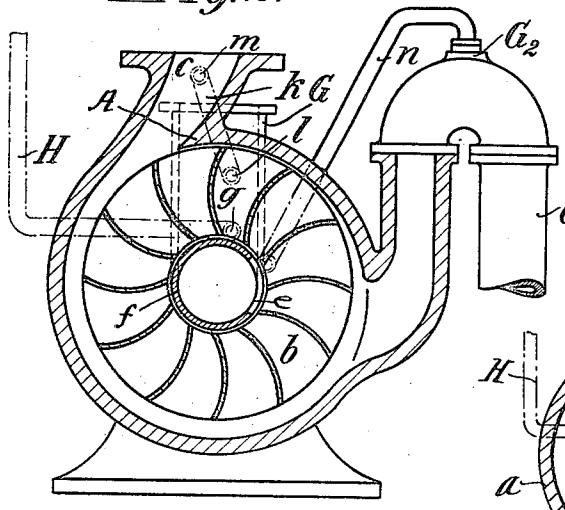

Fig. 1.

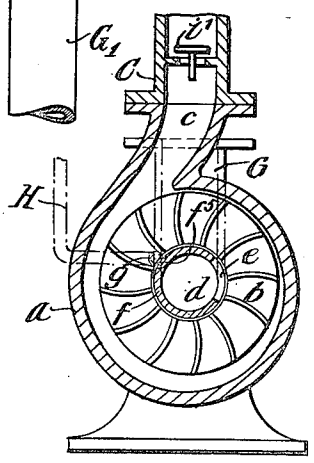

Fig. 3.

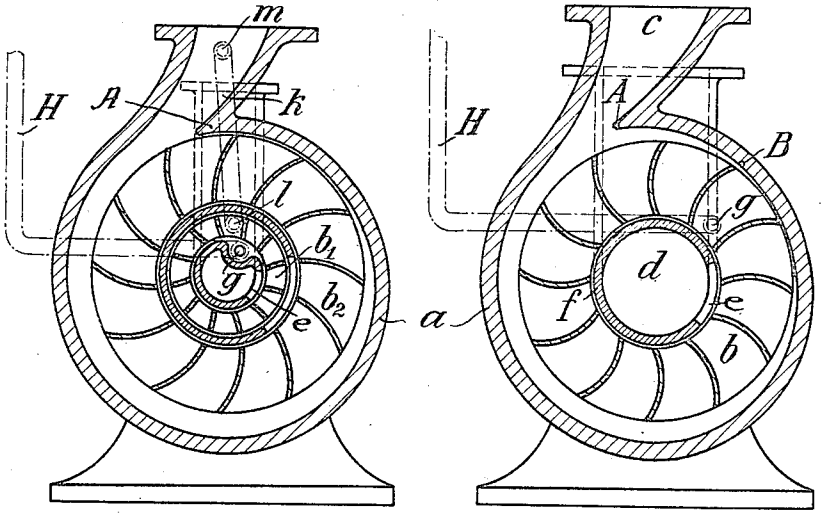

Fig. 4.

Witnesses:
Elsie Svenson
Ray T. Ernst

Inventor:
Otto Siemen
by Howson & Howson
attorneys.

O. SIEMEN.

ROTARY PUMP.

APPLICATION FILED APR. 15, 1913.

1,215,881.

Patented Feb. 13, 1917.

2 SHEETS—SHEET 2.

Fig. 5

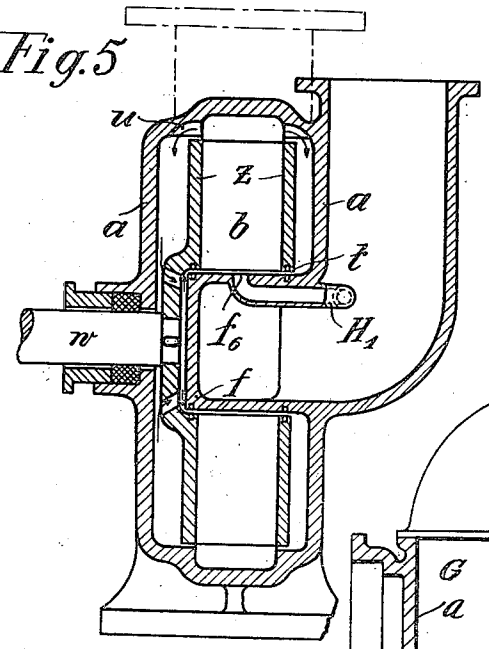

Fig. 7.

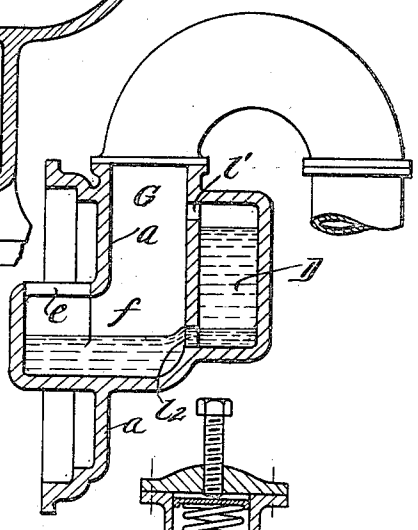

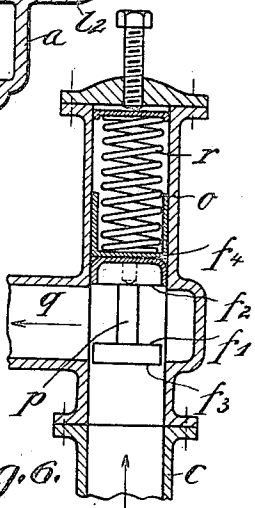

Fig. 6.

Witnesses:
Elsie Swenson
Ray J. Ernst.

Inventor:
Otto Siemen
by Munn & Co
Attorneys

UNITED STATES PATENT OFFICE.

OTTO SIEMEN, OF NONNENDAMM, NEAR BERLIN, GERMANY, ASSIGNOR TO SIEMENS-SCHUCKERTWERKE, G. M. B. H., OF BERLIN, GERMANY, A CORPORATION OF GERMANY.

ROTARY PUMP.

1,215,881. Specification of Letters Patent. Patented Feb. 13, 1917.

Application filed April 15, 1913. Serial No. 761,280.

To all whom it may concern:

Be it known that I, OTTO SIEMEN, a citizen of the German Empire, and residing at Nonnendamm, near Berlin, Germany, have invented certain new and useful Improvements in Rotary Pumps, of which the following is a specification.

My invention relates to a rotary pump for lifting or conveying liquids especially water and more particularly to a type of pumps which consist essentially of a blade wheel which is rotated eccentrically in a casing. My present pump furthermore is characterized by the fact that the liquid to be conveyed does not simultaneously enter all blades of the wheel. Thus the latter will not be impinged upon uniformly from all sides, but only at a part of its blades. Instead of the inlet openings which are distributed all over the periphery of the wheel, therefore, individual openings will be employed which are positioned only at one side of the pump at a point which is at a greatest possible distance from the outlet opening. A characteristic feature of these pumps is that they are able to generate a much higher pressure than the ordinary pumps which are impinged upon uniformly from all sides. The reason for the increase of the pressure generated in the liquid is due to the fact that by the blade wheel there will be energy continuously conveyed to the liquid, thus causing an increase of pressure because the water on its way from the inlet opening to the outlet opening cannot leak through at any point. As a matter fact pressure gages which are evenly distributed over the periphery of the casing will indicate a pressure which is increasing toward the discharge opening. It is immaterial, as far as the action of the pump is concerned, whether the inlet openings for the liquid are positioned on the interior or exterior circumference of the blade wheel or on the side thereof.

The pressure of the liquid to be conveyed by the pump will be increasing from the inlet opening of the casing toward the outlet opening not only at the interior circumference of the casing but in the entire liquid ring as far as it enters the cells of the blade wheel. This increase in pressure will also be imparted to the air which is eventually carried along with the blade wheel or which is given off by the water, provided that a certain minimum pressure will be kept at the outlet. In order to obtain a definite pressure, the pressure conduit must be closed either by a water column, such as is present when pumping into a container positioned at a high place, or by means of a valve which is operated automatically or by hand. The air being the comparatively lighter medium will be kept at the bottom of the blade chambers, and after entering into the wheel it will first be compressed, thereupon again expand when passing the air-containing cells at the inlet opening, whereupon it will again be compressed.

According to my invention the pump of the aforedescribed type is so modified that the air when being heavily compressed in the blade wheel can discharge to the outside. By this the pump will be caused to become self-priming as a suction pump, that is it will be made suitable for conveying air. As known the conduits in rotary pumps must be filled before starting or the air must be sucked off from the same by means of an especial air pump. If during operation of the pump slight quantities of air be entering into the suction conduit, which may be due to leakage, the pump pressure will be decreased and the water column will fall off. The fact that the operation of the pump is easily affected by the entrance of air is found especially disagreeable in case of pumps which are controlled from a distance or in case of pumps having an automatic control for rendering the same operative or inoperative, in which class of pumps the water column will not fall off. Such a pump will then further operate under no load and will be exposed to injury. In order to enable the discharge of air in the pump according to this invention special discharge openings are provided at a point of the casing where the air is under a pressure higher than atmospheric.

My invention will be more fully understood by reference to the accompanying drawings, in which Figure 1 shows a cross-section through a pump vertical to the axle, Figs. 2, 3 and 4 show modified forms of my pump of the same cross-section, in which an especial pressure is exerted upon the air sucked in, Fig. 5 a vertical section through the pump parallel to the axle, in which the

blade wheel is tightened against the periphery of the inlet pipe by the water which is subjected to pressure, Fig. 6 shows the construction of a known valve which may preferably be employed for operating my pump, Fig. 7 a section parallel to the axle of the pump having a water tank provided at the suction pipe, so that the pump whenever it is started is automatically filled with tightening water.

As shown in Fig. 1 the casing is indicated by the letter *a*, the blade wheel by *b*, the outlet by the letter *c*, the cylindrical space by *d* which space is limited by the fixed pipe *f* having the opening *e*. G is the pipe for the inlet with which the suction pipe of the pump is connected. The valve i_1 is arranged in the outlet *c* or in the pressure conduit C. In one or both side walls of the casing on the pipe *f* there is provided a discharge pipe H which is connected with the interior of the pump casing through the opening *g*, at which opening a high pressure will be exerted upon the air. This outlet opening *g* is connected with a channel f_5 in the pipe *f*.

The operation of my present pump will be as follows:—Before the first starting, the pump must be filled with water and the pressure conduit must be closed. As soon as the blade wheel of the pump will be set in rotation the water within the pump will be thrown outwardly against the walls of the casing and by reason of centrifugal force will form a liquid ring. The water can not discharge through the outlet *c*, because the latter is closed up by the valve i_1. If air be present in the suction conduit it will be carried away with the blade wheel and remain within the blade-chambers which are formed by the blades, and more particularly this air will be kept at the bottom of said blade-chambers. On the way from the inlet opening *e* to the outlet opening *g* the air will be more and more compressed. As soon as the air-containing blade-chambers will pass the outlet opening *g*, the air will be discharged to the outside and this process will continue until all present air is removed. Thereupon water will be discharged from the conduit H. Now the valve i_1 in the pressure conduit may be opened and the pump will now convey water.

If the pump during operation, that is if valve i_1 be open, has to overcome a less head than would correspond to the static pressure occurring in case the outlet be closed, the pressure of the air which is inclosed at the bottom of the cells will eventually not be sufficient to discharge the air.

In the constructions shown in Figs. 2 and 3 the pressure exerted upon the air will be still further increased by that pressure which is generated by the transformation of velocity into pressure which takes place at the outlet opening or its vicinity.

The outlet *c*, as shown in Fig. 2, is connected through the duct *k* with the casing of the pump at that point at which the air shall be discharged. The place of entrance *l* of the pipe *k* into the blade chamber may be at any desired distance in radial direction from the pump axis. This place of entrance the same as the place of entrance *m* of the pressure conduit *k* at the pressure flange will be arranged according to the pressure conditions of the pump. It is essential that the inlet opening is arranged at least in a distance from the vertex A which is equal to the pitch of the blades, so that the chamber from which the air shall be discharged will be completely separated from the outlet. In this manner the pressure can not equalize itself toward the outlet. The outlet opening for the air may also be placed in a small radial distance near the circumference of the blade wheel in order to make the pressure exerted upon the air as large as desired, or for this purpose also the pipe *f* with the opening *e* may be made very large. If it is found that the conditions of the entrance of the water become unfavorable, in the interior of the inlet pipe, an especial wheel b_1 may be arranged which is impinged upon from all sides and which will introduce the water under increased pressure and at increased velocity into the blade wheel b_2. The blade wheel which is impinged upon from all sides may be driven simultaneously with the main blade wheel or it may also be driven independently from the same.

Fig. 3 shows another form of the construction according to my invention. The spaces between the blades are divided into two sets of spaces b_1 and b_2 by a fixed ring concentric with the axis of the pump. Water is conveyed by means of the outer spaces, while air is conveyed in the inner spaces. The inner set of spaces b_1 is placed under an increased pressure by means of a pipe *k* connected to the branch pipe *c*, so that the collected air is expelled.

In order to increase the pressure exerted upon the air according to the arrangement shown in Fig. 4 the vertex of the pump, that is the point at which the blade wheel is in its greatest vicinity to the pump casing, may be removed from the outlet *c* in the direction of rotation. The point A of the casing at which the outlet branches off is then arranged in a certain distance from the blade wheel, and a wedge-shaped space is formed from this point A to the vertex B in which the water between blade wheel and casing is stowed and therewith subjected to an increased pressure.

The outlet opening *g* is connected with the chamber which is positioned in the vicinity of the vertex B where the greatest pressure takes place.

When the blades of the wheel are held at

their two sides by walls the air collecting at the bases of the blades can pass through the narrow clearance between the side walls and the internal admission pipe, whereby losses of pressure are caused. In order to prevent the escape of the air the clearance between the admission pipe and the blade wheel can be subjected from the outside to a higher pressure. In Fig. 5 an arrangement for this purpose is represented. The blade wheel b having the two side walls z is carried by the shaft w. In order to prevent the air issuing from the spaces between the blades through the clearance t into the pump casing the clearance is placed under pressure by means of passages u leading from a place of high pressure in the casing into the chambers between the side walls of the blade wheel and the wall of the casing.

In order to automatically operate the pump instead of an ordinary slide valve or a water column in the pressure conduit a valve may be employed which automatically maintains in the pump that minimum pressure which is suitable for the discharge of the air.

In Fig. 6 a clearance device is shown in the form of a well known valve which is employed for this purpose.

c indicates the outlet of a pump according to a construction as described; connected with the outlet c is a valve containing a piston p which is movable therein, said valve piston being exposed with two surfaces f_1 and f_2 to the pressure of the water in the pressure conduit q past the valve. A surface f_3 is directed toward the outlet of the pump and receives the pressure thereof, while a surface f_4 is loaded by a weight or by an adjustable spring r. As the pressures upon the surfaces will counteract each other, the valve piston will be completely balanced and the pump will always work against the pressure which is determined by the load imposed upon the valve piston p. The same purpose is attained, if the surfaces f_1 and f_2, for instance in case of a cylindrical construction of the piston, become zero.

According to my invention the packing of the pump can be made reliable by means of a device for automatically replacing the water which is thrown out of the pump. Fig. 7 shows an example of such a device which relates to an arrangement in which a pump is represented to which the medium to be lifted is supplied internally. G designates the suction pipe from which the water enters by way of the admission branch pipe f through the inlet opening e into the blade wheel (not shown) in the casing a. Only the one half of the casing a is shown. Connected to the suction pipe G is a tank D having upper and lower openings l_1, l_2 opening into the suction pipe. The tank D may be cast directly on the pipe G or, of course, be separate therefrom, when connecting pipes will be provided instead of the openings l_1 and l_2.

This device operates as follows:—Before the pump is first started it is filled with water, when the pipe f and the tank D are also filled. Whenever the pump is started subsequently the branch pipe f will first be emptied. When the air is then conveyed a portion of the water requisite for forming the packing ring of liquid is carried away. This is now automatically replaced, according to my invention, from the tank D as the water contained therein gradually flows out through the one opening l_2 or the connecting pipe between the tank D and the pipe f. The quantity of water which flows out of the tank D can be regulated as desired by an adjustable valve (not shown) at the opening l_2. As soon as the air has been removed from the suction pipe water begins to be lifted and the tank D fills again with water. The size of the tank D must, of course, correspond to the quantity of air to be conveyed.

Having thus described my invention I claim as new and desire to secure by Letters Patent of the United States:—

1. A rotary liquid pump comprising a casing, an inlet and an outlet therein, a blade wheel within said casing, said inlet being disposed at only one place of said blade wheel, and an additional opening provided at a point of said casing near the bottom of the blade chambers for carrying off the air collecting therein.

2. A rotary liquid pump comprising a casing, an inlet and an outlet therein, a blade wheel within said casing, said inlet being disposed at only one place of said blade wheel, an additional opening provided at a point of said casing near the bottom of the blade chambers for carrying off the air collecting therein, and a valve for temporarily closing said outlet during carrying off said air.

3. A rotary liquid pump comprising a casing, an inlet and an outlet therein, a blade wheel within said casing, said inlet being disposed at only one place of said blade wheel, and an additional opening provided at a point of said casing near the bottom of the blade chambers for carrying off the air collecting therein, said casing being of modified construction so as to produce an additional increase of liquid pressure in a chamber of the blade wheel after passing of said outlet of the pump.

4. A rotary liquid pump comprising a casing, an inlet and an outlet therein, a blade wheel within said casing, said inlet being disposed at only one place of said blade wheel, an additional opening provided at a point of said casing near the bottom of the blade chambers for carrying off the air col-

lecting therein, and a valve for temporarily closing said outlet during carrying off said air, the vertex of said casing being removed from the outlet, thereby forming a wedge-shaped space contracting in the direction of rotation, whereby an additional increase of liquid pressure will be generated in a chamber of said blade wheel after passage of said outlet.

5. A rotary liquid pump comprising a casing, an inlet and an outlet therein, a blade wheel within said casing, said inlet being disposed at only one place of said blade wheel, an additional opening provided at a point of said casing near the bottom of the blade chambers for carrying off the air collecting therein, and an automatic valve inserted in the outlet of said pump for maintaining a certain minimum pressure in said outlet.

6. A rotary liquid pump comprising a casing, an inlet and an outlet therein, a blade wheel within said casing, said inlet being disposed at only one place of said blade wheel, an additional opening provided at a point of said casing near the bottom of the blade chambers for carrying off the air collecting therein, said casing being of modified construction so as to produce an additional increase of liquid pressure in a chamber of the blade wheel after passage of said outlet, and an automatic valve inserted in the outlet of said pump for maintaining a certain minimum pressure in said outlet.

7. A rotary liquid pump comprising a casing, an inlet and an outlet therein, a blade wheel within said casing, said inlet being disposed at only one place of said blade wheel, an additional opening provided at a point of said casing near the bottom of the blade chambers for carrying off the air collecting therein, a valve for temporarily closing said outlet during carrying off said air, and an auxiliary tank provided near said inlet for supplying the water which is necessary for starting the pump.

In testimony whereof, I have signed my name to this specification in the presence of two witnesses.

OTTO SIEMEN.

Witnesses:
HENRY HASPER,
WOLDEMAR HAUPT.