July 8, 1969 O. L. MINOR 3,453,663

ARTIFICIAL LEG HAVING A LOCKABLE KNEE JOINT RESPONSIVE TO FOOT PIVOTING AND BODY WEIGHT

Filed April 20, 1967 Sheet 1 of 2

FIG. 1

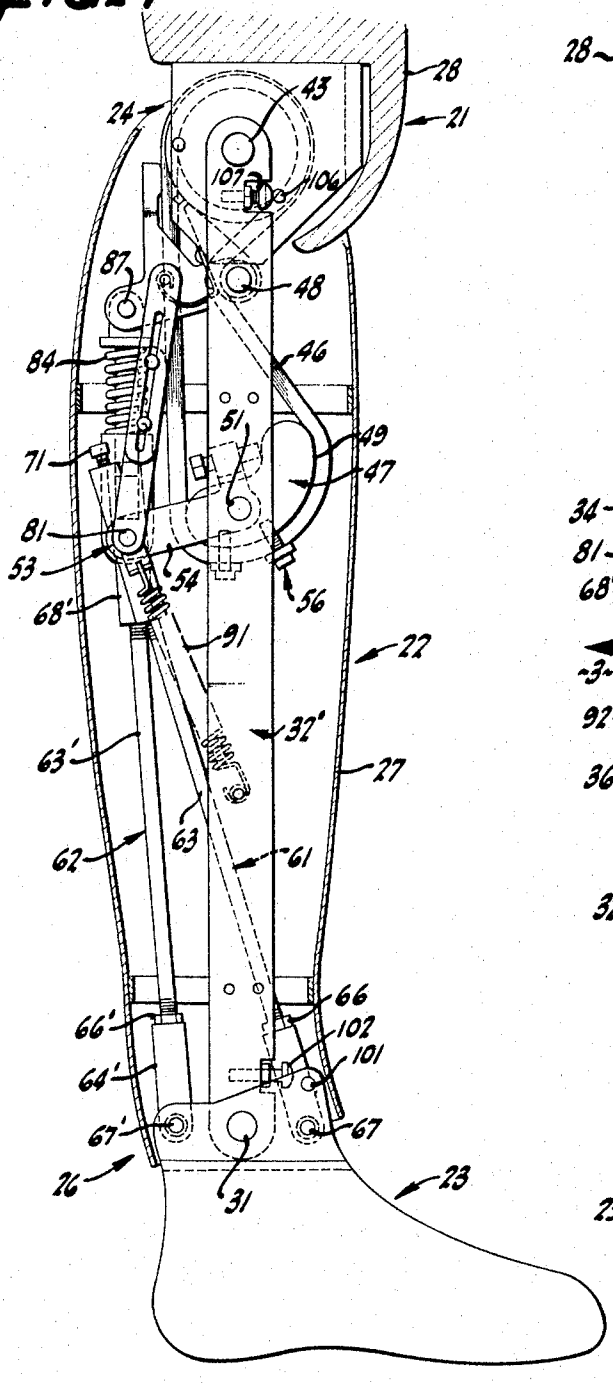

FIG. 2

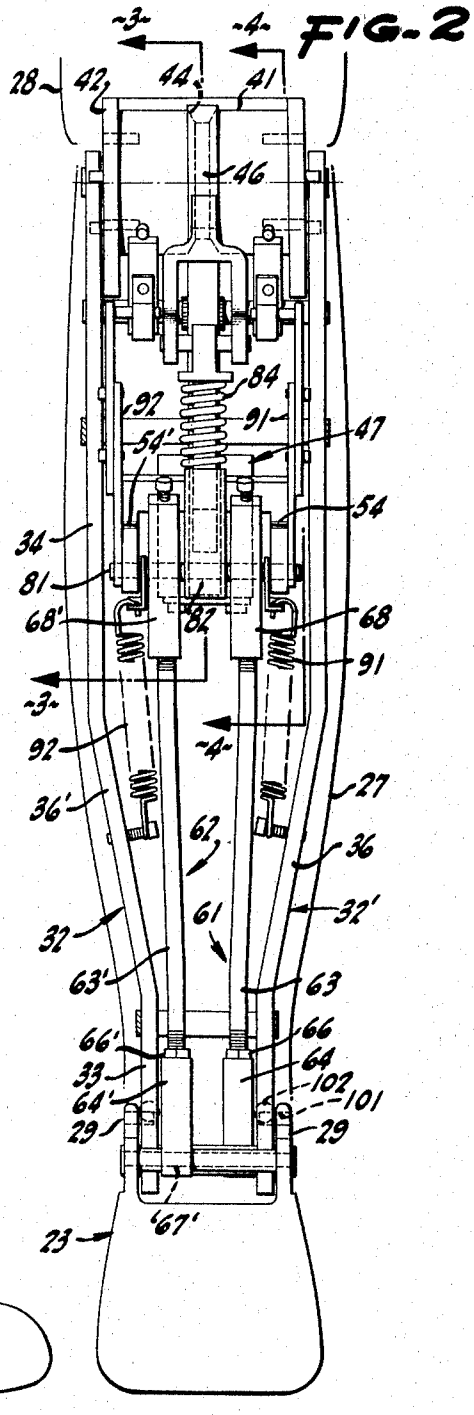

INVENTOR
ORVAL L. MINOR
By Lippincott, Ralls & Hendrickson
ATTORNEYS

July 8, 1969 O. L. MINOR 3,453,663

ARTIFICIAL LEG HAVING A LOCKABLE KNEE JOINT RESPONSIVE TO FOOT PIVOTING AND BODY WEIGHT

Filed April 20, 1967 Sheet 2 of 2

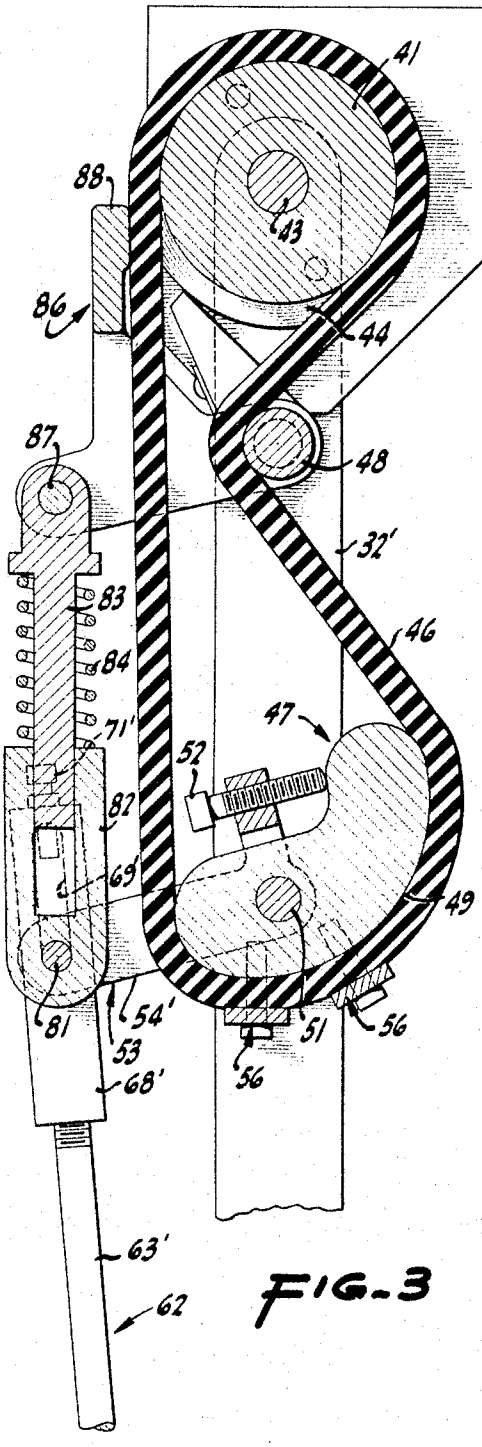

FIG. 3

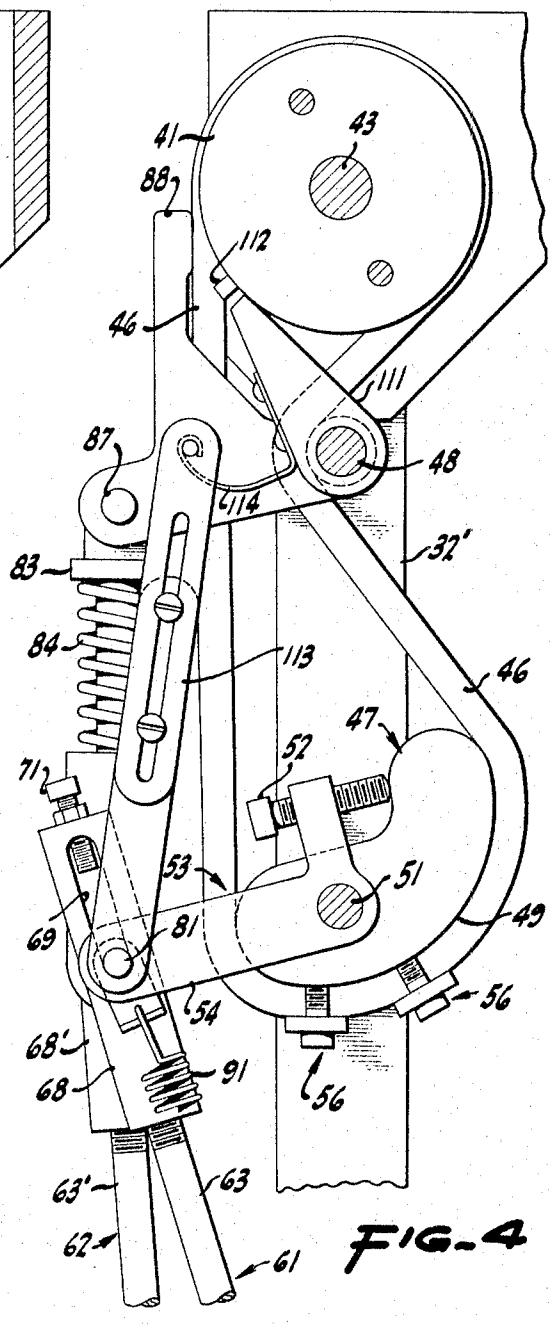

FIG. 4

INVENTOR
ORVAL L. MINOR

By
Lippincott, Ralls & Hendrickson
ATTORNEYS

United States Patent Office

3,453,663
Patented July 8, 1969

3,453,663

ARTIFICIAL LEG HAVING A LOCKABLE KNEE JOINT RESPONSIVE TO FOOT PIVOTING AND BODY WEIGHT

Orval L. Minor, 520 Cowper, Apt. 18,
Palo Alto, Calif. 94301

Continuation-in-part of application Ser. No. 397,862, Sept. 21, 1964. This application Apr. 20, 1967, Ser. No. 632,379

Int. Cl. A61f *1/04, 1/08*

U.S. Cl. 3—23 10 Claims

ABSTRACT OF THE DISCLOSURE

An artificial leg incorporating a pivotal knee joint actuated from a movable ankle joint. The knee joint of this prosthetic device is locked by limited pivoting of the ankle joint and placement of body weight upon the knee joint. In this manner the knee joint is prevented from collapsing under any conditions wherein body weight is applied downwardly upon the limb, or leg; and not only does the particular knee joint control hereof readily accommodate the normal motions of walking, but also automatically locks upon body-weight shifting, such as might occur at the commencement of a fall or stumble, so that the leg cannot collapse under the person wearing same. Additionally, the present invention provides a cushioning effect in the locking of the joint while at the same time allowing a free lower-leg pivoting upon the removal of body weight from the leg.

The present application is a continuation-in-part of my prior copending patent application Ser. No. 397,862, filed in the U.S. Patent Office on Sept. 21, 1964, and entitled, "Artifical Limb," now abandoned.

Background of invention

Since the early days of the solid, wooden artifical limbs, there have been many notable improvements made in jointed limbs. In particular, since the World War II, there have been developed artificial limbs which in many ways approximate the joint movements of natural limbs. There are yet, however, many limitations in conventional artificial limbs which prove exceedingly trying to those utilizing them.

More specifically with regard to artificial legs, including knee and ankle joints, it is conventional for the knee joint to lock with the upper- and lower-leg portions in alignment. This locking is normally necessary to prevent collapse of the leg when weight is placed thereon. During walking, the lower leg is normally moved forwardly by a free swing. With the leg joint unlocked, the upper leg is moved forward to thereby impart a pivotal motion to the lower leg which swings in a free arc into alignment with the forwardly-extended upper-leg portion and thereupon locks therewith, so that weight may be placed upon the outstretched leg. While this operation is highly advantageous over a nonjoined leg, it does provide somewhat of a stiff-legged walk; and, furthermore, fails to accommodate conditions wherein the upper- and lower-leg portions should not be in alignment when the body weight is placed thereon. These latter conditions arise in climbing or walking along inclined surfaces, for example. More particularly, a person walking along the side of a

hill, for example, normally does not fully extend the leg on the uphill side of the body, i.e., it is necessary for the two legs to have effectively different lengths to walk under these conditions. Similarly, climbing of stairs requires locking the knee joint with the upper- and lower-leg portions inclined with respect to each other and although certain known artificial legs attempt to accomplish this result, there remains the problem of climbing an inclined surface in which the foot is always inclined with respect to horizontal. Considerable difficulty is often encountered in negotiating this type of surface with a conventional artificial leg.

Although a wide variety of artificial-leg structures are known in the art, certain of these are more relevant to the present invention in that they do relate to flexible ankle devices. It is common for these prior art devices to incorporate a substantial degree of complexity while yet being limited insofar as full safety for the user is concerned. Some of the relevant prior art in this field of prosthetic devices is to be found in U.S. Patents Nos. 21,289 to Wilcox, 1,685,219 to Neumann, 2,575,802 to Fischer et al. and 2,924,828 to Chiasson. Additionally, a substantial amount of work in this field has been accomplished in foreign countries, as exemplished by Austrian Patent No. 168,889 and German Patent No. 347,920.

It is common in jointed artificial limbs for control over the joints to be provided from the body end, i.e., artificial legs are normally controlled as to the knee joint by the upper-leg portion. The present invention operates quite oppositely by providing control over the knee joint from the foot. Careful consideration of the mechanical operation of walking shows that locking, unlocking, and pivoting of the knee joint may be directly related to the positioning of the foot. The human knee provides for locking of the knee joint with the upper- and lower-leg portions inclined with respect to each other. While the present invention does not provide the full equivalent of a human knee joint, it does provide for locking of the knee joint, with the upper- and lower-leg portions inclined with respect to each other and weight placed on the foot, and the foot is inclined with respect to the lower-leg portion. The present invention also provides for freeing the knee joint when weight is removed therefrom, so that the lower leg and foot may swing thereabout. These features provide a close approximation of the degree of motion and limitation of motion present in normal human leg movements.

It is possible for a person wearing an artificial leg in accordance with the present invention not only to walk along a horizontal surface in a normal manner, but also to walk up or down an inclined surface in a normal manner, walk along a laterally inclined surface in either direction and to place weight on the artificial leg with the knee bent. The invention additionally provides the normal degrees of motion necessary, such as free swinging lower leg and foot, as required in a seated position. Additionally, the invention provides positive mechanical stops, or locks, completely eliminating any possibility of reverse knee joint rotation or knee joint collapse.

Description of figures

The present invention is illustrated as to a single preferred embodiment thereof in the accompanying drawings wherein:

FIGURE 1 is a side-elevational view with a portion of the covering removed;

FIGURE 2 is a read-elevational view of the invention with a portion of the covering removed;

FIGURE 3 is an enlarged partial-sectional view taken in the plane 3—3 of FIGURE 2; and

FIGURE 4 is an enlarged partial-sectional view taken in the plane 4—4 of FIGURE 2.

Description of preferred embodiment

Considering now the illustrated embodiment of the present invention in some detail and referring first to FIGURES 1 and 2 of the drawings, it will be seen that the invention hereof includes an upper-leg portion **21**, a lower-leg portion **22**, and a foot portion **23**. The upper-leg portion **21** is adapted to be connected in any desired manner either directly or preferably indirectly to the leg of an amputee, and is joined to the lower-leg portion **22** by a knee joint **24**. The upper-leg portion **21** may, for example, be provided with a flat upper surface having a key affixed thereacross and adapted for engagement with a keyway in the under surface of an upwardly extending element adapted to be directly affixed to the leg of an amputee with suitable locking means between the two, so that this upper means may be provided separately from the device of the present invention. The bottom or lower leg portion **22** is connected to the foot **23** by an ankle joint **26**, so that the foot is pivotally connected to the leg. No attempt is made herein to illustrate details of the foot **23**, for such does not form a part of the present invention. It is, however, noted that the variety of different artificial feet is known in the art and commercially available. The present invention provides for modification of the upper or ankle connection of the foot in the manner described below; and it is noted that at least limited flexing of the foot at the ball thereof is desirable.

A suitable outer cover **27** is provided as a shell, or envelope for the lower-leg portion of the present invention, and within this cover are mounted the working parts of the artificial leg hereof. There is additionally provided an outer cover **28** about the upper-leg portion **21** to cover the knee joint; and it will be seen that the covers **27** and **28** are formed to accommodate pivoting of the knee joint, i.e., upper-leg portion with respect to lower-leg portion, without interference between the covers. The ankle joint **26** is formed by a pair of upstanding side walls **29** affixed to the top of the foot **23**, and having a transverse ankle shaft **31** extending therebetween. These upstanding walls **29** are appropriately curved at front and back surfaces, as indicated, so that upon forward and backward pivoting of the foot, there will be no interference between the foot and upstanding walls thereon with the lower-leg cover **27**.

Further with regard to the actual structure of the preferred embodiment, it is noted that a pair of rigid and structurally strong side plates **32** and **32'** are provided in extension between the ankle joint and the knee joint. The ankle joint itself is provided by extension of the transverse shaft **31** through the side plates **32, 32'** in rotary relation thereto, so that aside from other elements of the invention, the foot is free to pivot about the ankle joint in the plane of FIG. 1. In order to conform the general configuration of a lower-leg, the side plates **32, 32'** are each formed with a vertical bottom portion **33** connected to a vertical upper-portion **34** by an outwardly tapered central portion **36**. Inasmuch as artificial limbs must normally be provided in a plurality of different sizes, the present invention is usually lengthened by varying the length of the lower vertical portion **33** of the side plates; and, of course, varying the overall length of the cover portion **27** proportionately. Metal bands **35** or the like may be provided to mount the cover **27** that may snap thereon.

Considering now the knee joint itself, it is noted that same includes a short transverse cylinder **41** having end plates **42** affixed thereto and carrying appropriate attachment means for the upper leg. This cylinder **41** is rotatably mounted between the upper ends of the side plates **32, 32'** as by means of axial stub shafts **43**, so that the upper-leg portion **21** is free to rotate about the lower-leg portion or vice versa. The knee cylinder **41** has a central V-groove **44** extending about the circumference thereof, possibly as best illustrated in FIGURE 3. The upper- and lower-leg portions are affixed together in relatively rotatable relationship by means of engagement between the cylinder **41** and side plates **32, 32'**, so that the knee joint is adapted for pivoting.

Appropriate braking or locking means are provided for the knee joint and operable from the ankle joint. This feature of the present invention is of particular importance inasmuch as it does provide for locking of the knee joint when weight is placed thereon and pivoting of the ankle joint occurs. The locking force increases with increasing pivoting of the ankle joint in the manner described below so as to thus exclude any and all possibility of collapsing of the knee joint during any conceivable type of usage thereof. The braking or locking means for the knee joint includes a V-belt **46** disposed within the circumferential groove **44** about the cylinder **41** and extending about a cam **47**, pivotally mounted beneath the knee joint between the side plates **32, 32'**. A knurled cylindrical shaft **48** is fixedly mounted between the side plates **32, 32'** between the knee joint and cam with the belt **46** lapping partially around such shaft between the joint and cam in the manner clearly illustrated in FIGURE 1. Locking of the knee joint **24** is accomplished by tightening of the belt **46** thereabout through rotation of the cam **47**. To this end the cam **47** is provided with an eccentric cam surface **49** extending further to one side of the cam shaft **51** than to the other. The cam is mounted on the cam shaft **51** between the side plates **32, 32'** for free rotating thereabout. Provision is made for adjusting the cam position and locking it between the belt and shaft by a set screw **52** threaded through an upper extension of the cam actuator **53**, also mounted on the cam shaft and having a pair of arms **54–54'** extending rearwardly therefrom. The adjusting screw is adapted to bear against a rear cam surface, as indicated in FIGURES 3 and 4. There are also shown to be provided a pair of clamps **56** bolted to the exterior surface of the cam and extending over the V-belt **46** to hold the belt against the cam surface. Actuation of the cam is accomplished from the ankle joint as described below.

As shown in FIGURES 1 and 2, there are provided a pair of activators **61** and **62** extending from the ankle to the vicinity of the cam **47**. Each of these activators is similarly constituted to be pivotally mounted at both ends and adjustable in length. To this end, the activator **61**, for example, may include a central bar **63** threaded into a lower nipple **64** having a lock nut **66** threaded on the bar against the top of the nipple with the nipple pivotally mounted on a transverse anchor pin **67** extending between the side plates **29** of the ankle. This particular activator is mounted with the anchor pin ahead of the ankle shaft **31** toward the front of the foot. At the upper end of the activator, the bar **63** is threaded into an upper nipple **68** which has a transverse slot **69** therethrough and extending longitudinally thereof with a set screw **71** threaded into the opposite end of the nipple to extend a predeterminable distance into the slot for defining the effective slot length. The other activator **62** is, as stated above, constituted in the same manner as the activator **61**; however, the transverse anchor pin **67'** thereof is mounted behind the ankle shaft **31**, as clearly shown in FIGURE 1. The two activators are mounted interiorly of the side plates **32, 32'** with one of the activators **61** being mounted adjacent the side plate **32'** and the other activator **62** being mounted adjacent the side plate **32**.

As stated above, the activators **61, 62** operate the cam **47** from the ankle joint to lock the knee joint. This is accomplished by an extension of an activator pin **81** between the cam actuator arms **54, 54'** through the slots **69, 69'** of the activators **61** and **62**. Pivoting of the foot **23** to raise the front portion thereof will be seen to move the activator **61** upwardly with respect to the side plate **32'**

inasmuch as the anchor pin **67** is located ahead of the ankle shaft **31**. This, then causes the activator **61** to force the cam actuator **53** to rotate clockwise about the cam shaft **51** and thus to swing the cam **47** in a clockwise direction to thereby tighten against the belt **46**. This action will be seen to draw the belt more tightly into the V-groove **44** about the knee joint cylinder **41**, so as to prevent rotation thereof with respect to the side plates of the lower leg portion. Similarly, pivoting of the foot in the opposite direction will produce a relatively upward movement of the activator **62**, so that again the cam actuator **53** is urged to rotate in a clockwise direction and produce the same results. It will thus be seen that for either direction of rotation of the foot about the ankle joint, the cam **47** is caused to rotate to tighten the belt at the knee joint and lock the knee against rotation. While this action is highly advantageous and considered to be a marked improvement in the art, the present invention incorporates further improvements as described below.

In addition to the connection of activators **61** and **62** to the activator pin **81** secured between actuator arms **54** and **54'**, there is also provided a sleeve **82**, pivotally mounted upon the activator pin **81** and extending upward therefrom with a plunger **83** slideably disposed therein. The upper end of this plunger **83** is flanged and a compression spring **84** is disposed between such flange and the upper end of the sleeve **82**. In the illustrated embodiment, this sleeve and the plunger are approximately midway between the side plates **32, 32'** and the plunger **83** is pivotally connected at the upper end thereof to a depressor **86** which may have somewhat of an inverted T configuration in side elevation and an inverted forked configuration in end elevation. The pivotal connection is accomplished by a depressor pin **87** extending between the sides of the depressor and through a bore in the top of the plunger **83**. The depressor is also connected in rotatable relation to the roller **48**, as by extension of the ends thereof through the sides of the depressor, so that the depressor is actually pivotal about the roller axis by means of the plunger **83**. The upwardly ending portion of the depressor **86** includes a head **88** aligned with the V-belt **46** immediately adjacent the cylinder **41** and preferably slightly below the center thereof. This head **88** is adapted to be pivoted against the belt to depress the belt further into the groove **44** in the cylinder to initiate a binding action whereby pivoting of the cam **47** will not slide the belt about the cylinder, but, instead, will further urge the belt into the V-groove about the cylinder and, consequently produce a locking action between belt and cylinder.

There are also provided a pair of retractor springs **91–92** which are stretched between the activator pin **81** and the side plates **32–32'**, respectively, below the cam shaft. These springs pull the activator pin **81** downwardly so as to resist cam tightening and also angle joint pivoting.

In addition to the elements previously described, there are further provided herein certain physical stops which are either requisite or desirable for completely safe operation of the present invention. Thus, first considering the ankle joint, there is noted to be illustrated in FIGURE 1 a stop **101** in the form of a fixed boss extending from an ankle plate **29** in front of the side plate **32'**. Pivoting of the ankle joint is thus limited in movement to the point of contact between the side plate **32'** and the stop **101** and this may be made adjustable by the provision of a set screw **102** threaded into the leading edge of the side plate **32'** and having a lock nut thereon. In practice, a maximum degree of rotation is normally limited at the ankle joint to about 6'. Physical stops are also provided at the connection of activators and cam actuator wherein it will be seen that movement of one activator upwardly, upon pivoting at the ankle joint, will cause the other activator to move downwardly. As either activator moves downwardly, it will slide along the activator pin through the slot **69** until the set screw **71** engages this pin. This, then, limits the total rotational movement available at the ankle joint. This latter stop mechanism is applicable to ankle-joint pivoting in either forward or backward direction, and the purpose of the additional stop **101**, for pivoting in the forward direction, is discussed below. At the knee joint there are also provided certain physical stops to prevent rotation of the knee joint past vertical in one direction and more than about 130° in the opposite direction. The first of these stops may be best seen in FIGURES 1 and 2, and as shown in FIGURE 1, there is provided upon the end plate **42** a small boss **106** in position to contact the side-plate **32'** when the upper- and lower-leg portion are in vertical alignment.

Adjustment of the stop may be accomplished by the provision of a small set screw **107** threaded into the leading edge of the side plate **32'** and having a lock nut thereon to fix the position of the screw aligned with the boss **106**. Limitation upon opposite rotation of the knee joint is provided by a pair of pivotally mounted spring-loaded pawls **111** and **111'** mounted for rotation on the shaft of roller **48** to ride on the rear undersurface of the cylinder **41** and adapted to engage small bosses **112, 112'** extending radially therefrom. These pawls **111** may be operated from longitudinally adjustable arms **113, 113'** pivotally mounted at their lower ends upon the activator pin **81** and carrying at the upper end leaf springs **114, 114'** secured to the back side of the pawls **111**. This, then, provides for pivoting of the pawls **111** upwardly against the cylinder **41** when the knee joint is pivoted and weight applied to the leg so that the angle joint pivots. The latter stops, including the pawls **111** and **111'**, are only added for precautionary measure and in most instances may be excluded from the structure.

Considering now operation of the present invention, as described above, and referring again to the drawings, it is first noted that the artificial limb of the present invention is adapted for connection to the upper leg of an amputee or a person having a leg missing, so as to simulate a real leg, for the purposes of walking and the like. Some type of upper connection, forming no part of the present invention, is affixed to the leg stump with the present invention depending therefrom. In clear distinction from conventional, artificial legs, the present invention provides for locking of the knee joint in accordance with movement of the ankle joint. It will be appreciated that in the presence of a downward pressure on the leg any forward shifting of the weight atop the leg will cause the ankle joint to pivot, inasmuch as the underside of the foot is presumably resting on some fixed surface. This pivoting of the angle joint occurs by a forward movement of the upper portion of the invention so that effectively the side plates **32, 32'** swing to the right in FIGURE 1. The activators **61** and **62** are freely rotatable about anchor pins **67** and **67'** at the ankle so that the activators also swing forwardly at their upper ends. This, then, applies an upward force upon the activator pin **81** of FIGURES 3 and 4 to rotate the cam **47** through the cam actuator **53**. As the eccentric cam surface **49** is rotated in the clockwise direction, in this case by the activator **61**, it applies a force to the belt. At the same time as the cam actuator **53** is rotated by the activator **61**, the piston **83** is moving upwardly by the sleeve **82** pushing the upper piston flange through the compression spring **84**. This, then, causes the depressor **86** to rotate about the roller shaft **48** and press with the presser head **88** against the V-belt. With the noted location of the depressor head **88** against the V-belt behind the cylinder and immediately below the center thereof, this belt is initially pushed further into the groove about the cylinder so that the cam movement causes the belt to tighten into the groove **44** about the cylinder **41**. The depressor **86** thus prevents creeping of the belt about the cylinder. It will, of course, be appreciated that alternative means may be provided to prevent such possible

creasing as, for example, by fixing the belt between a cam and a fixed point such as a bar between the side plates. In such a situation, the depressor and associated elements may be omitted; however, there then should be provided a compresison spring in the activator **61** or **62** if the spring **84** is omitted.

Further to operation of the depressor **86**, it is noted that upward movement of the activator pin **81** applies a force to the depressor for rotating it about the roller shaft **48** through the compression spring **84**. Following application of a sufficient force to the V-belt by the depressor head, additional upward movement of the activator pin **81** merely serves to compress the spring **84** so that this spring does then, in effect, accommodate overthrust. Although the V-belt locks the knee joint, the ankle joint is yet free to pivot further forwardly until the stop **101** is engaged by the side plate **32'** or the adjusting screw **102** thereon. Appropriate adjustments are made, both by this adjusting screw **102** and the set screw **71'** at the upper end of the activator **62**, so both stops come into effect at the same time. As previously noted, upward movement of the activator **61** results in a corresponding downward movement of the activator **62** so that the latter slides downwardly on the activator pin **81** until the screw **71'** engages this pin. Inasmuch as normal operation of an artificial leg moves body weight forwardly of the foot, it is desirable to provide a positive stop **101** in this direction. Insofar as opposite rotation of the ankle joint is concerned, the set screw **71** atop the activator **61** is sufficient, for in this direction body weight is shifted over the heel and consequently, lesser forces are applied on the activator **61** when it serves as a stop.

Upon removal of weight from the artificial leg hereof, the ankle joint is freed to pivot back into normal position as illustrated in FIGURE 1 and the springs **91**, **92** do then swing the angle joint back into this position. As the ankle joint swings into normal, horizontal position, the cam **47** is rotated to free the V-belt **46** and consequently unlock the knee joint so the lower leg **22** may be swung forwardly much in the manner of a pendulum, by swinging the upper leg. In order to prevent overshoot wherein the knee joint may pivot the lower leg beyond alignment with the upper leg, the stop **106** is provided. There may thus be accomplished with the artificial leg of the present invention, a substantially normal walking action. In particular it is noted that whatever the rotational or pivotal position of the knee joint may be, a downward pressure upon the knee joint transmitted through the artificial leg to a fixed surface beneath the foot, will result in a pivoting of the ankle joint so as to lock the knee joint. This, then, positively prevents any possible collapse or free swinging of the knee joint when weight is applied thereto. This foregoing point is believed to be apparent insofar as the standing position is concerned. It is, of course, physically possible to press downwardly upon the artificial limb with the foot flat against a floor or the like without moving the ankle joint to lock the knee joint. However, as soon as weight is shifted from vertical, the ankle joint does pivot and a locking action occurs at the knee joint so that as the weight is progressively shifted the locking action becomes greater and no collapse of the knee joint is possible.

In usage, the present invention is found to closely simulate actual leg action in many respects. In particular it is noted that a cushioning effect is provided so that the user feels somewhat as though he is walking on a carpeted floor. Also the user is reassured upon realization that the knee joint cannot collapse or pivot free at any time that he has his weight placed thereon and consequently he is in no danger of falling despite stumbling or missteps. Common occurrences such as "stubbing one's toe," with the present invention results in the application of body weight to the leg with the knee joint bent and this will be seen to immediately lock the joint so that weight can be applied downwardly through the artifical leg so that the wearer can hold himself up with that leg to regain his balance.

What is claimed is:

1. A prosthetic device composing an artificial foot, a lower leg, means defining a rotatable ankle joint connecting said lower leg and foot, means defining a rotatable knee joint having connecting means atop same for joinder with an upper leg and including a rotatable cylinder having a circumferential groove therein, a belt disposed in said groove, a rotatably mounted eccentric cam engaging said belt for tightening same in said groove upon cam pivoting, spring means urging said cam into an unpivoted position, and a pair of activators extending from said foot to said cam with one being pivotally mounted ahead of the ankle joint and one behind the ankle joint whereby pivoting of the foot about the ankle joint in either direction pivots the cam through said activators to tighten said belt and lock the knee joint.

2. A prosthetic device as set forth in claim **1** further defined by means engaging said belt and urging same into said groove at least at the commencement of cam pivoting for preventing creeping of the belt about the cylinder upon cam pivoting.

3. A prosthetic device as set forth in claim **2** further defined by the means engaging said belt comprising a pivotally mounted depressor having a portion aligned with the cylinder groove adjacent said belt for urging the belt tightly into the groove at the commencement of cam pivoting, and means connecting said activators to said depressor for pivoting same.

4. A prosthetic device as set forth in claim **1** further defined by said lower leg comprising a pair of elongated rigid side plates extending between ankle and knee joints, said ankle joint comprising a pair of upstanding walls on said foot with an ankle shaft therebetween and extending in rotatable relation through said side plates, and said knee joint comprising said cylinder disposed between said side plates transversely of the leg with at least one shaft rotatably mounting said cylinder between said side plates.

5. A prosthetic device as set forth in claim **4** further defined by a cam shaft extending through said cam between said side plates for rotatably mounting said cam, a cam actuator rotatably mounted on said cam shaft and having a movable portion engaging said cam for adjusting the initial position thereof and a pair of actuator arms extending from said shaft with a depressor pin therebetween, said activators each having a longitudinal slot of adjustable length adjacent the top thereof through which said depressor pin extends.

6. A prosthetic device as set forth in claim **5** further defined by a sleeve pivotally carried by said depressor pin and having a plunger provided with a flange and slideably disposed therein with a compression spring disposed about said plunger between the top of said sleeve and the plunger flange, and a shaft pivotally connecting said depressor and plunger for pivoting of the depressor through the spring.

7. A prosthetic device as set forth in claim **6** further defined by the spring means of claim **1** comprising a pair of restoring springs connected between said depressor pin and the side plates below the cam for pulling the depressor pin down to urge the foot into horizontal position through said activators.

8. A prosthetic device as set forth in claim **4** further defined by a boss upon one of the upstanding walls on said foot ahead of the side plate adjacent said wall in position to engage said plate upon limited pivoting of the ankle joint, and means threaded upon said latter side plate for extension toward said boss to adjust the maximum allowable ankle joint pivoting.

9. A prosthetic device as set forth in claim **1** further defined by a first stop comprising a spring-loaded pawl pivotally mounted adjacent said knee-joint cylinder for riding thereon and a radial projection on said cylinder disposed to engage said pawl upon predetermined knee-

joint pivoting from vertical, and a second stop including a boss upon an end of said cylinder for engaging the front of a side plate when the latter is substantially vertical and means for adjusting the location of said side-plate front adjacent said boss to establish maximum knee-joint pivoting forwardly.

10. A prosthetic device as set forth in claim **1** further defined by said belt being endless and extending about both cylinder and cam, and both said cylinder groove and belting having a V-shape in cross section for maximized gripping of the cylinder by the belt upon cam pivoting.

References Cited

UNITED STATES PATENTS

21,289	8/1858	Wilcox	3—23 XR
762,031	6/1904	Engels	3—27
1,685,290	9/1928	Neumann	3—23
2,551,537	5/1951	Havens	3—27
2,575,802	11/1951	Fischer et al.	3—2
2,924,828	2/1960	Chiasson	3—27

FOREIGN PATENTS

168,889	9/1951	Austria.
347,920	1/1922	Germany.
779,087	7/1957	Great Britain.
502,396	11/1954	Italy.

RONALD A. GAUDET, *Primary Examiner.*

U.S. Cl. X.R.

3—27, 35