(12) INTERNATIONAL APPLICATION PUBLISHED UNDER THE PATENT COOPERATION TREATY (PCT)

(19) World Intellectual Property Organization
International Bureau

(43) International Publication Date
4 February 2010 (04.02.2010)

PCT

(10) International Publication Number
WO 2010/014517 A2

(51) International Patent Classification:
E21B 49/08 (2006.01) *G01N 27/74* (2006.01)

(21) International Application Number:
PCT/US2009/051789

(22) International Filing Date:
27 July 2009 (27.07.2009)

(25) Filing Language: English

(26) Publication Language: English

(30) Priority Data:
12/181,468 29 July 2008 (29.07.2008) US

(71) Applicant *(for all designated States except US)*: **BAKER HUGHES INCORPORATED** [US/US]; P.O. Box 4740, Houston, TX 77210-4740 (US).

(72) Inventors; and

(75) Inventors/Applicants *(for US only)*: **CARTELLIERI, Ansgar** [DE/DE]; Lueneburg, 21335 Lower Saxony (DE). **SCHAEFER, Peter** [DE/DE]; Grob Kreutz, 14550 BRB (DE). **SROKA, Stefan** [DE/DE]; Adelheidsdorf, 29352 Niedersachsen (DE).

(74) Agents: **CARSON, Matt, W.** et al.; Baker Hughes Incorporated, P.O. Box 4740, Houston, TX 77210-4740 (US).

(81) Designated States *(unless otherwise indicated, for every kind of national protection available)*: AE, AG, AL, AM, AO, AT, AU, AZ, BA, BB, BG, BH, BR, BW, BY, BZ, CA, CH, CL, CN, CO, CR, CU, CZ, DE, DK, DM, DO, DZ, EC, EE, EG, ES, FI, GB, GD, GE, GH, GM, GT, HN, HR, HU, ID, IL, IN, IS, JP, KE, KG, KM, KN, KP, KR, KZ, LA, LC, LK, LR, LS, LT, LU, LY, MA, MD, ME, MG, MK, MN, MW, MX, MY, MZ, NA, NG, NI, NO, NZ, OM, PE, PG, PH, PL, PT, RO, RS, RU, SC, SD, SE, SG, SK, SL, SM, ST, SV, SY, TJ, TM, TN, TR, TT, TZ, UA, UG, US, UZ, VC, VN, ZA, ZM, ZW.

(84) Designated States *(unless otherwise indicated, for every kind of regional protection available)*: ARIPO (BW, GH, GM, KE, LS, MW, MZ, NA, SD, SL, SZ, TZ, UG, ZM, ZW), Eurasian (AM, AZ, BY, KG, KZ, MD, RU, TJ, TM), European (AT, BE, BG, CH, CY, CZ, DE, DK, EE, ES, FI, FR, GB, GR, HR, HU, IE, IS, IT, LT, LU, LV, MC, MK, MT, NL, NO, PL, PT, RO, SE, SI, SK, SM, TR), OAPI (BF, BJ, CF, CG, CI, CM, GA, GN, GQ, GW, ML, MR, NE, SN, TD, TG).

Declarations under Rule 4.17:

— *as to applicant's entitlement to apply for and be granted a patent (Rule 4.17(ii))*

— *as to the applicant's entitlement to claim the priority of the earlier application (Rule 4.17(iii))*

Published:

— *without international search report and to be republished upon receipt of that report (Rule 48.2(g))*

(54) Title: IN-SITU REFRACTION APPARATUS AND METHOD

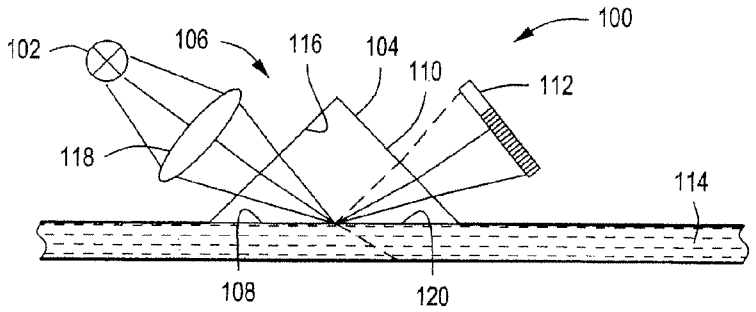

FIG. 1

(57) Abstract: An apparatus and method for estimating a fluid property downhole includes an electromagnetic energy emitter, a window having an input interface that receives electromagnetic energy emitted from the electromagnetic energy emitter and converges the electromagnetic energy entering the window, a fluid interface and an output interface. A detector detects electromagnetic energy exiting the window from the output interface.

WO 2010/014517 A2

IN-SITU REFRACTION APPARATUS AND METHOD

Inventor(s): SROKA, Stefan; CARTELLIERI, Ansgar; and SCHAEFER, Peter

BACKGROUND

1. Technical Field

[0001] The present disclosure generally relates to well bore tools and in particular to apparatus and methods for downhole fluid evaluations.

2. Background Information

[0002] Oil and gas wells have been drilled at depths ranging from a few thousand feet to as deep as five miles. A large portion of the current drilling activity involves directional drilling that includes drilling boreholes deviated from vertical by a few degrees to horizontal boreholes to increase the hydrocarbon production from earth formations. Various downhole tools have been developed to obtain information regarding the drilling system and the formations surrounding the borehole.

[0003] Information about the subterranean formations traversed by the borehole may be obtained by any number of techniques. Techniques used to obtain formation information include obtaining one or more core samples of the subterranean formations and obtaining fluid samples produced from the subterranean formations. These samplings are collectively referred to herein as formation sampling. Core samples are often retrieved from the borehole and tested in a rig-site or remote laboratory to determine properties of the core sample, which properties are used to estimate formation properties. Modern fluid sampling includes various downhole tests and sometimes fluid samples are retrieved for surface laboratory testing.

[0004] It is often desirable to evaluate fluids in the downhole environment to estimate various characteristics and properties of the fluids. Downhole evaluations where the fluid under investigation remains substantially at downhole conditions increase efficiency of the operation by reducing or eliminating the need to remove the evaluation tool from the borehole and provide better estimates by maintaining the fluid at substantially downhole conditions.

SUMMARY

[0005] The following presents a general summary of several aspects of the disclosure in order to provide a basic understanding of at least some aspects of the disclosure. This summary is not an extensive overview of the disclosure. It is not intended to identify key or critical elements of the disclosure or to delineate the scope of the claims. The following summary merely presents some concepts of the disclosure in a general form as a prelude to the more detailed description that follows.

[0006] Disclosed is an apparatus for estimating a fluid property downhole. The apparatus may include an electromagnetic energy emitter, a window having an input interface that receives electromagnetic energy emitted from the electromagnetic energy emitter and converges the electromagnetic energy entering the window, a fluid interface and an output interface. A detector detects electromagnetic energy exiting the window from the output interface.

[0007] A method for estimating a fluid property downhole includes emitting electromagnetic from an electromagnetic energy emitter and receiving the emitted electromagnetic energy at a window having an input interface that converges the electromagnetic energy entering the window, the electromagnetic energy being transmitted to a fluid interface, wherein at least a portion of the electromagnetic energy is transmitted to an output interface. The method may further include detecting electromagnetic energy exiting the window from the output interface using a detector, and estimating the fluid property at least in part by using the detected electromagnetic energy.

BRIEF DESCRIPTION OF THE DRAWINGS

[0008] For a detailed understanding of the present disclosure, reference should be made to the following detailed description of the several non-limiting embodiments, taken in conjunction with the accompanying drawings, in which like elements have been given like numerals and wherein:

FIG. 1 illustrates a non-limiting example of a downhole refractometer according to one or more embodiments of the disclosure;

FIGS. 2A and **2B** illustrate an example of a sensor array that may be used with several embodiments of the disclosure;

FIG. 3 shows an example of a light intensity transition curve;

FIG. 4 illustrates a non-limiting example of a downhole refractometer according to one or more embodiments of the disclosure; and

FIG. 5 is an elevation view of a well drilling system conveying a downhole tool according to one or more non-limiting examples of the disclosure.

DESCRIPTION OF EXEMPLARY EMBODIMENTS

[0009] **FIG. 1** illustrates a non-limiting example of a downhole refractometer **100** according to one or more embodiments of the disclosure. The refractometer **100** shown in this example may include an electromagnetic energy emitter **102** and a window **104** having an input interface **106** that converges light entering the window **104** from the electromagnetic energy emitter **102**. The window **104** may include a fluid interface **108** and an output interface **110**. A detector array **112** may be disposed in cooperation with the output interface **110**, so that the detector array **112** can detect electromagnetic energy exiting the window **104** from the output interface **110**.

[0010] The electromagnetic energy emitter **102** may include any suitable source of electromagnetic energy. For example, the electromagnetic energy emitter **102** may include a broadband source, a narrow band source, a tunable source or a combination thereof. In one or more embodiments, the electromagnetic energy emitter **102** may include a light-emitting diode (LED). In one or more embodiments, the electromagnetic energy emitter **102** emits non-collimated energy in the form of light. The emitted electromagnetic energy may include infrared (IR), near IR, visible light, ultraviolet (UV) or electromagnetic energy that includes two or more spectra. The electromagnetic energy emitter **102** may emit electromagnetic energy of a selected wavelength or band of wavelengths as desired toward the window **104**.

[0011] The window **104** may be in communication with a fluid **114** via the fluid interface **108**. In one or more embodiments, the fluid **114** may have a high pressure associated therewith. For example, the fluid **114** may have a pressure that is substantially higher than a pressure on an opposing side of the window **104**. The pressure of the fluid **114** may be substantially the downhole environment pressure as in the borehole pressure or formation

pressure. The window may include one or more angled outer walls **116**, and the angle of the outer wall may be selected based in part on a selected design limit, on an expected fluid pressure maximum, on a critical optical angle, or on a combination thereof. In one or more embodiments, the window may be substantially cone-shaped as shown in **FIG. 1**. In one or more embodiments, the window may include conical frustum shape. In one or more embodiments, the window **104** may be operable as a pressure barrier between the fluid **114** and the several internal elements of the refractometer **100**.

[0012] The input interface **106** may include a lens **118** that alters the beam spread of the electromagnetic energy emanating from the emitter **102**. The lens may be a separate component as shown here or may be included as a portion of the window **104**. The window **104** may further include one or more internal reflectors **120** that may provide total internal reflections for wavelengths exceeding the reflector critical angle.

[0013] The window **104** may be constructed using any suitable material that may be substantially transparent to selected electromagnetic energy wavelengths. The window material may further provide internal reflection and refraction properties, and combinations thereof. In one non-limiting example, the window may be constructed using a sapphire material.

[0014] The detector array **112** may be selected based in part on the electromagnetic energy source used. In one or more embodiments, the detector array **112** may include an array of photodetectors. In one or more embodiments, the detector array **112** may include a complementary metal oxide semiconductor (CMOS).

[0015] Referring now to **FIGS. 1-3**, non-limiting operational examples will be explained. The refractometer **100** of the present disclosure may be operated at high pressures in combination with a broad measuring range of the refraction index (nD) from 1.25 to 1.65 nD. This broad measurement range may be used to determine the refraction index for crude oil with low API gravities and high nD values (refraction index up to 1.65) as well as for gaseous substances with low nD values (refraction index less than 1.3).

[0016] The refractometer **100** may be used to determine the refractive index of fluids present in a downhole environment. A non-collimated light may be transmitted through the window material to the fluid interface **108**. The energy may pass through the fluid interface **108** and through the fluid **120**. The energy may also be refracted and/or reflected as shown in **FIG. 1**.

The angle at which the energy changes from refraction to reflection is dependent on the ratio of the refractive indices of the window material and the fluid. The detector array **112** receives the reflected energy passing through the output interface **116** and detects the transition from refraction to reflection as shown in **FIGS. 2** and **3**. In these examples, higher reflection intensity results in more sensor elements being illuminated as shown in **FIG. 2**. **FIG. 3** illustrates that a transition zone indicating refraction is between a substantially constant low intensity zone and a substantially constant high intensity zone. The constant level low intensity zone indicates that energy is being transmitted through the fluid interface. The constant level high intensity zone indicates that energy is being totally reflected off the fluid interface. The refractive index of the window is known and the fluid refractive index may be estimated using the energy intensity detected at the detector array, the angle of the received energy and the ratio relationship. The angle may be determined by the known geometric construction of the window and by the position and number of array elements **122** illuminated by the received energy.

[0017] Turning now to **FIG. 4**, a schematic diagram illustrates a downhole refractometer **400** that may be used for analyzing a fluid in the downhole environment. The refractometer **400** includes an electromagnetic energy emitter **402** and a window **404** that may be positioned to interface with a fluid **414** and a sensor array **412** having two or more sensor elements **422**. The refractometer **400** further includes a controller **424** and a transceiver **426**. The controller **424** may further include a processor **428**, a memory **430** and programs **432.**

[0018] The electromagnetic energy emitter **402** may include any suitable source of electromagnetic energy. For example, the electromagnetic energy emitter **402** may include a broadband source, a narrow band source, a tunable source or a combination thereof. In one or more embodiments, the electromagnetic energy emitter **402** may include an LED. In one or more embodiments, the electromagnetic energy emitter **402** emits non-collimated energy in the form of light. The emitted electromagnetic energy may include infrared (IR), near IR, visible light, ultraviolet (UV) or electromagnetic energy that includes two or more spectra. The electromagnetic energy emitter **402** may emit electromagnetic energy of a selected wavelength or band of wavelengths as desired toward the window **404**. The electromagnetic energy emitter **402** of this example may be a single emitter or an array of emitters producing energy within a relatively narrow wavelength band of non-collimated electromagnetic energy.

[0019] In one or more non-limiting embodiments, the window **404** may include an input interface **406**, a fluid interface **408** and an output interface **410**. The window **404** and at least one of the input interface **406**, fluid interface **408** and the output interface **410** may be manufactured as a monolithic structure as shown in **FIG. 4**. In one or more embodiments, the window **404** and the input interface **406** may be discrete members and the output interface **401** may be a discrete member. The window **404** may further include one or more angled walls **416** and internal reflectors **420**. In one or more embodiments, the input interface **406** may include one or more lenses **418**, **434** for altering the beam spread of the electromagnetic energy at the input interface **406**. In one or more embodiments, the input interface lens **418** may include a convex surface portion for converging electromagnetic energy passing through the lens **418**. In one non-limiting example, the input interface may include a collimating lens **434** and a focusing lens **418** and the output interface **410** may include a collimating lens **436**. In one or more embodiments, the output interface **410** may include a convex surface portion.

[0020] In one or more embodiments, the detector array **412** may be substantially similar to the detector array **112** described above and shown in **FIG. 1**. The detector array **412** may be selected based in part on the electromagnetic energy source used. In one or more embodiments, the detector array **412** may include an array of photodetectors. In one or more embodiments, the detector array **412** may include a CMOS.

[0021] The controller **424** may include any suitable processor **428** and memory **430** for operations downhole. In one or more embodiments, the controller may be housed within a cooling device and/or have active cooling.

[0022] In operation, the refractometer **400** emits electromagnetic energy toward a fluid **414** through the window **404** housed in a wall of a fluid chamber **438**. The electromagnetic energy converges within the window and reflects off one or more of the internal reflectors **420**. In one or more embodiments, a reflective material **440** may be disposed on a surface of the window to provide total reflections at the window wall. The reflective materials may be applied by coating or other suitable process. In one or more embodiments, the reflective material **440** may include aluminum, silver, gold, copper, or chromium. Any combination of these or other reflective materials are within the scope of the disclosure.

[0023] The electromagnetic energy then interacts with the fluid interface at a plurality of angles. Depending on the angle of incidence with the plane of the fluid interface, the non-

collimated electromagnetic energy will pass directly through fluid interface and the fluid and/or reflect or refract. Energy with incident angles less than the critical angle will refract and energy with incident angles greater than the critical angle will reflect. The reflected electromagnetic energy may further reflect off the internal reflectors **420** and reflective material **440** to exit the window at the output interface toward the detector array **412**.

[0024] The detector array **412** produces a signal responsive to the received energy, which signal is received by the controller **424** for analysis. The controller **424** may further be used to control the electromagnetic energy source **402**. The controller **424** may be located downhole with the refractometer **400** or at a surface location as discussed below and shown in **FIG. 5**. In one or more embodiments, the several component parts of the controller, such as the processor, memory and programs may be disposed partly downhole and partly at a surface location or at other locations along a drill string, wireline or other carrier.

[0025] The controller **424** receives and processes the signals received from the detector array **412** using the processor **428** and programs **432**. In one aspect, the controller **424** may analyze or estimate the detected energy and transmit processed information to a surface controller using the transceiver **426**. In one aspect, the controller **424** may analyze or estimate one or more properties or characteristics of the fluid downhole and transmit the results of the estimation to a surface controller using the transceiver **426**. In another aspect, the controller **424** may process the signals received from the detector array **412** to an extent and telemeter the processed information to a surface controller for producing a spectrum and for providing an in-situ estimate of a property of the fluid, including the contamination levels of the fluid. In one or more embodiments, control of the downhole refractometer may be conducted using the programmed instructions, or simply programs **432.** Information obtained and information processed downhole may be stored in the controller memory **430** and retrieved when the refractometer is removed from the borehole.

[0026] Any of the several refractometer embodiments of the present disclosure may be conveyed in a well borehole on any number of carrier types. For example, the refractometer may be incorporated into a downhole tool and carried on a wireline sonde. In other embodiments, the refractometer may be carried on a drill string in a logging-while-drilling (LWD) arrangement, which may also be considered as a measurement-while-drilling arrangement (MWD) for the purposes of the present disclosure. For brevity, the discussion below will describe a while drilling arrangement without limiting the scope of disclosure.

[0027] **FIG. 5** schematically illustrates a non-limiting example of a drilling system **500** in a measurement-while-drilling ("MWD") arrangement according to several non-limiting embodiments of the disclosure. A derrick **502** supports a drill string **504**, which may be a coiled tube or drill pipe. The drill string **504** may carry a bottom hole assembly ("BHA") referred to as a downhole sub **506** and a drill bit **508** at a distal end of the drill string **504** for drilling a borehole **510** through earth formations.

[0028] The exemplary drill string **504** operates as a carrier, but any carrier is considered within the scope of the disclosure. The term "carrier" as used herein means any device, device component, combination of devices, media and/or member that may be used to convey, house, support or otherwise facilitate the use of another device, device component, combination of devices, media and/or member. Exemplary non-limiting carriers include drill strings of the coiled tube type, of the jointed pipe type and any combination or portion thereof. Other carrier examples include casing pipes, wirelines, wireline sondes, slickline sondes, drop shots, downhole subs, BHA's, drill string inserts, modules, internal housings and substrate portions thereof.

[0029] Drilling operations according to several embodiments may include pumping drilling fluid or "mud" from a mud pit **512**, and using a circulation system **514**, circulating the mud through an inner bore of the drill string **504**. The mud exits the drill string **504** at the drill bit **508** and returns to the surface through an annular space between the drill string **504** and inner wall of the borehole **510**. The drilling fluid is designed to provide a hydrostatic pressure that is greater than the formation pressure to avoid blowouts. The pressurized drilling fluid may further be used to drive a drilling motor **516** and may be used to provide lubrication to various elements of the drill string **504**.

[0030] In the non-limiting embodiment of **FIG. 5**, the downhole sub **506** includes a formation evaluation tool **518**. In one or more embodiments, the formation evaluation tool **518** may be adapted to carry any of the several refractometer embodiments described herein. The formation evaluation tool **518** may include an assembly of several tool segments that are joined end-to-end by threaded sleeves or mutual compression unions **520**. An assembly of tool segments suitable for the present disclosure may include a power unit **522** that may include one or more of a hydraulic power unit, an electrical power unit and an electro-mechanical power unit. In the example shown, a formation sample tool **524** may be coupled to the formation evaluation tool **518** below the power unit **522**.

[0031] The exemplary formation sample tool **524** shown comprises an extendable probe **526** that may be opposed by bore wall feet **528**. The extendable probe **526**, the opposing feet **528**, or both may be hydraulically and/or electro-mechanically extendable to firmly engage the well borehole wall. The formation sample tool **524** may be configured for extracting a formation core sample, a formation fluid sample, formation images, nuclear information, electromagnetic information, and/or downhole information, such as pressure, temperature, location, movement, and other information. In several non-limiting embodiments, other formation sample tools not shown may be included in addition to the formation sample tool **524** without departing from the scope of the disclosure.

[0032] Continuing now with **FIG. 5**, several non-limiting embodiments may be configured with the formation sample tool **524** operable as a downhole fluid sampling tool. In these embodiments, a large displacement volume motor/pump unit **530** may be provided below the formation sample tool **524** for line purging. A similar motor/pump unit **532** having a smaller displacement volume may be included in the tool in a suitable location, such as below the large volume pump, for quantitatively monitoring fluid received by the downhole evaluation tool **518** via the formation sample tool **524**. As noted above, the formation sample tool **524** may be configured for any number of formation sampling operations. Construction and operational details of a suitable non-limiting fluid sample tool **524** for extracting fluids are more described by U.S. Patent No. 5,303,775, the specification of which is incorporated herein by reference.

[0033] The downhole evaluation tool **518** may include a downhole evaluation system **534** for evaluating several aspects of the downhole sub **506**, the drilling system **500**, aspects of the downhole fluid in and/or around the downhole sub **506**, formation samples received by the downhole sub **506**, of the surrounding formation, and combinations thereof. The downhole evaluation system **534** may be adapted to carry any of the several refractometer embodiments described herein.

[0034] One or more formation sample containers **536** may be included for retaining formation samples received by the downhole sub **506**. In several examples, the formation sample containers **536** may be individually or collectively detachable from the downhole evaluation tool **518**.

[0035] A downhole transceiver **546** may be coupled to the downhole sub **506** for bidirectional communication with a surface transceiver **540**. The surface transceiver **540** communicates received information to a surface controller **538** that includes a memory **542** for storing information and a processor **544** for processing the information. The memory **542** may also have stored thereon programmed instructions that when executed by the processor **544** carry out one or more operations and methods described in the present disclosure. The memory **542** and processor **544** may be located downhole on the downhole sub **506** in several non-limiting embodiments, such as the embodiments described above and shown in **FIG. 4**.

[0036] The present disclosure is to be taken as illustrative rather than as limiting the scope or nature of the claims below. Numerous modifications and variations will become apparent to those skilled in the art after studying the disclosure, including use of equivalent functional and/or structural substitutes for elements described herein, use of equivalent functional couplings for couplings described herein, and/or use of equivalent functional actions for actions described herein. Such insubstantial variations are to be considered within the scope of the claims below.

CLAIMS

What is claimed is:

1. An apparatus for estimating a fluid property downhole comprising:
   (a) an electromagnetic energy emitter;
   (b) a window having an input interface that receives electromagnetic energy emitted from the electromagnetic energy emitter and converges the electromagnetic energy entering the window, a fluid interface and an output interface; and
   (c) a detector that detects electromagnetic energy exiting the window from the output interface.

2. An apparatus according to claim 1, wherein the electromagnetic energy emitter emits non-collimated electromagnetic energy.

3. An apparatus according to claim 1, wherein the electromagnetic energy emitter includes one or more LED emitters.

4. An apparatus according to claim 1, wherein the window comprises cone-shaped or conical frustum window.

5. An apparatus according to claim 1, wherein the window and at least one of the input interface, fluid interface and the output interface comprise a monolithic structure.

6. An apparatus according to claim 1, wherein the window and at least one of the input interface and the output interface comprise discrete members.

7. An apparatus according to claim 1, wherein the window comprises a sapphire material.

8. An apparatus according to claim 1, wherein the window provides a high-pressure barrier for evaluating a high pressure downhole fluid.

9. An apparatus according to claim 1, wherein at least one of the input interface and the output interface includes a convex surface portion.

10. An apparatus according to claim 1, further comprising a reflective material disposed on a surface of the window.

11. An apparatus according to claim 10, wherein the reflective material includes aluminum, silver, gold, copper, chromium, or combinations thereof.

12. An apparatus according to claim 1, wherein the detector comprises a detector array.

13. An apparatus according to claim 12, wherein the detector array comprises a plurality of photodetectors.

14. An apparatus according to claim 12, wherein the detector array comprises a CMOS.

15. An apparatus according to claim 1 further comprising a controller that receives one or more signals from the detector.

16. An apparatus according to claim 15, wherein the controller includes a processor that processing the received signals according to programmed instructions to estimate the refractive index of a fluid.

17. An apparatus according to claim 16, wherein the estimated refractive index is in a range of about 1.25 nD to about 1.65 nD.

18. A method for estimating a fluid property downhole comprising:
(a) emitting electromagnetic from an electromagnetic energy emitter;
(b) receiving the emitted electromagnetic energy at a window having an input interface that converges the electromagnetic energy entering the window, the electromagnetic energy being transmitted to a fluid interface, wherein at least a portion of the electromagnetic energy is transmitted to an output interface;
(c) detecting electromagnetic energy exiting the window from the output interface using a detector; and
(d) estimating the fluid property at least in part by using the detected electromagnetic energy.

19. A method according to claim 18, wherein emitting electromagnetic from an electromagnetic energy emitter includes emitting non-collimated electromagnetic energy.

20. A method according to claim 18, wherein detecting electromagnetic energy includes using a CMOS detector array.

21. A method according to claim 18, wherein estimating the fluid property includes estimating a refractive index that is in a range of about 1.25 nD to about 1.65 nD.

22. A method according to claim 18 further comprising using the window at least in part as a pressure barrier for high pressure downhole fluids.

IN-SITU REFRACTION APPARATUS AND METHOD
Inventor(s): SROKA, Stefan; CARTELLIERI, Ansgar; and SCHAEFER, Peter
Reference No. 594-44921-WO

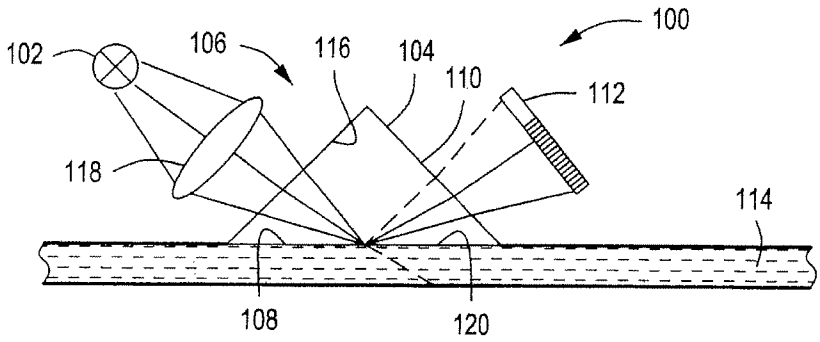

FIG. 1

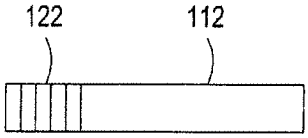

FIG. 2A

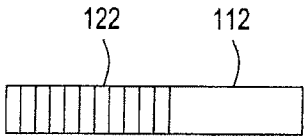

FIG. 2B

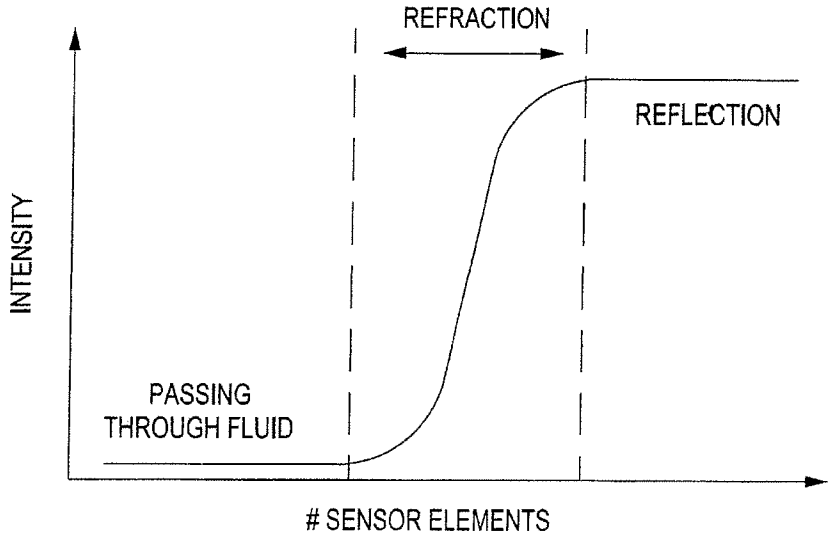

FIG. 3

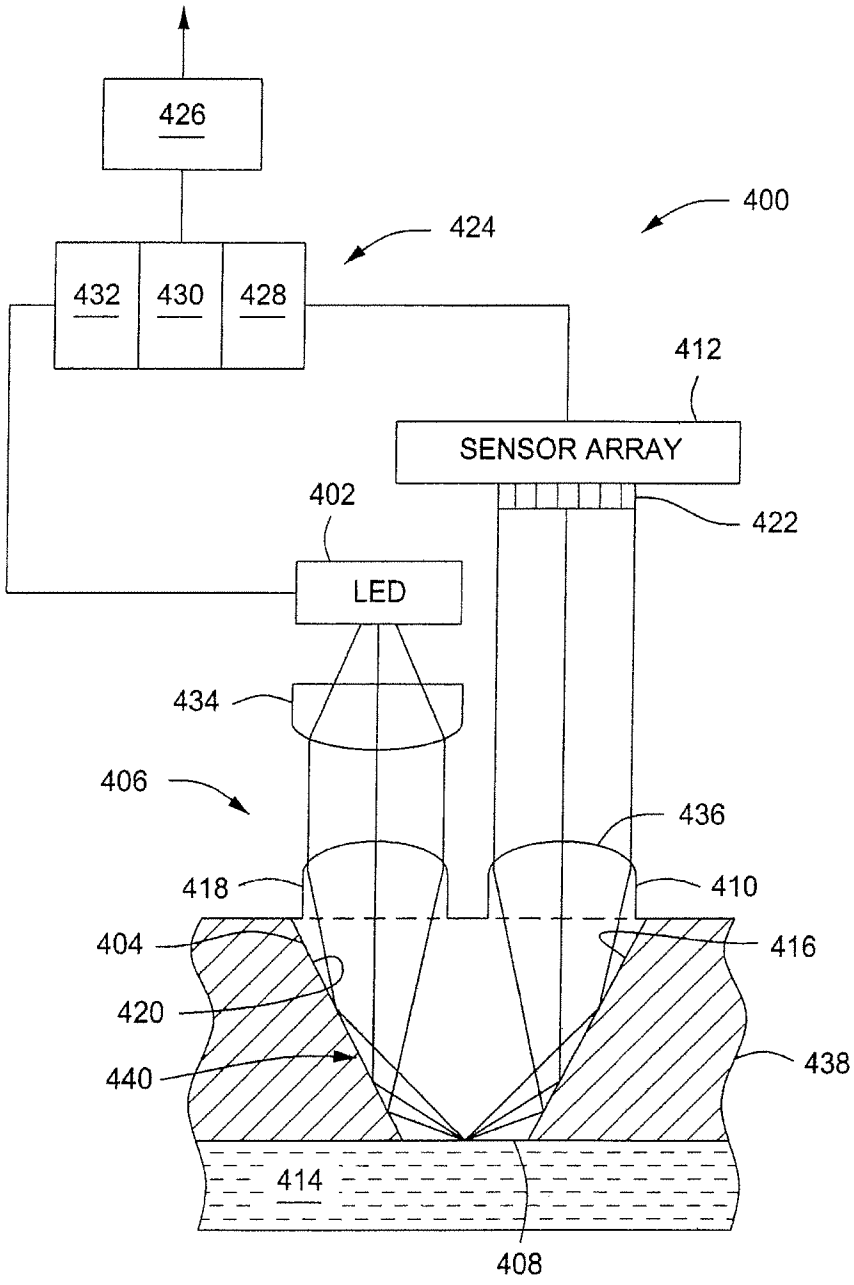
426
424
400
432
430
428
412
SENSOR ARRAY
402
422
LED
434
406
436
418
410
404
416
420
438
440
414
408

FIG. 4

IN-SITU REFRACTION APPARATUS AND METHOD
Inventor(s): SROKA, Stefan; CARTELLIERI, Ansgar; and SCHAEFER, Peter
Reference No. 594-44921-WO

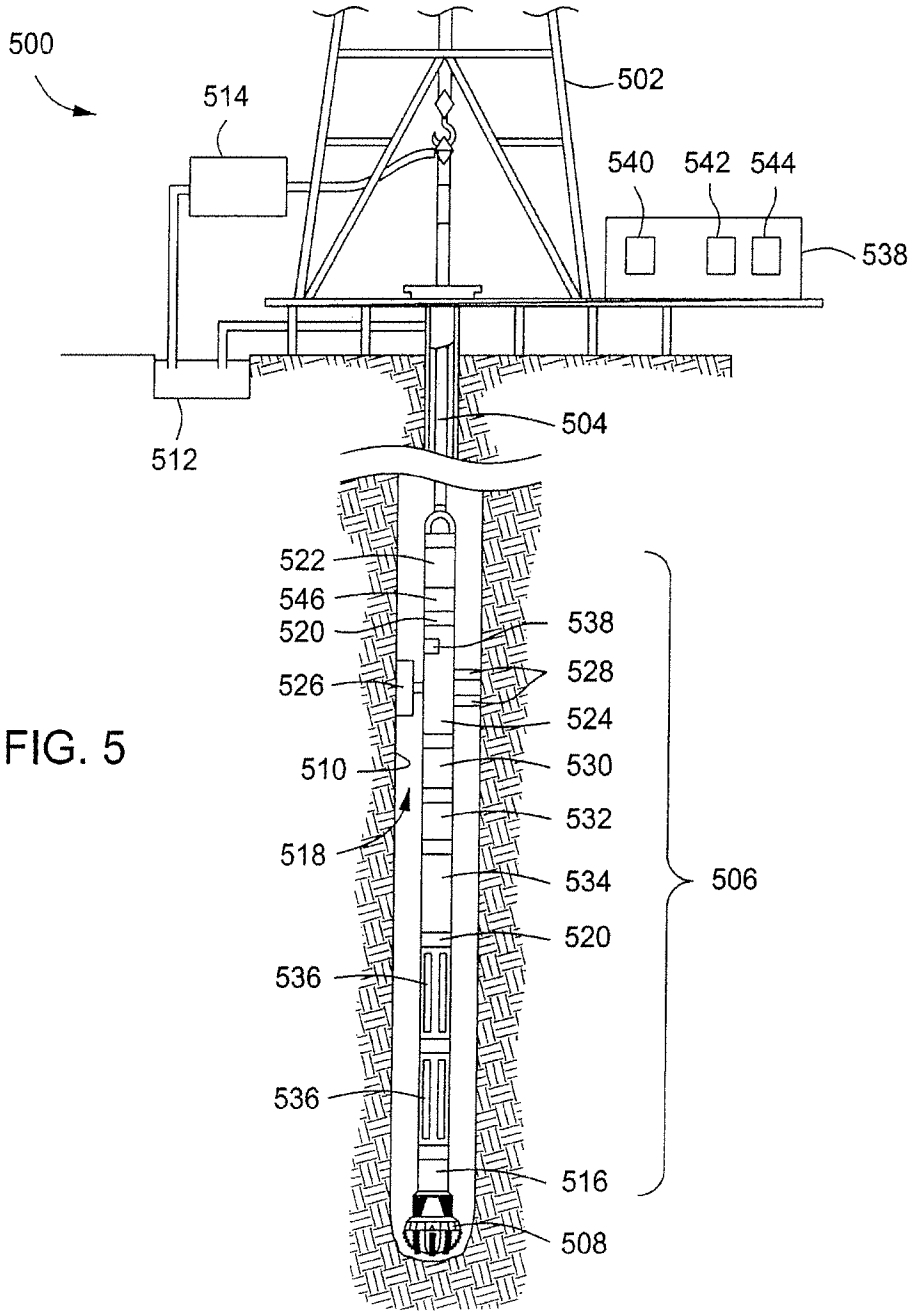

FIG. 5