July 7, 1925. 1,545,413

G. W. ELMVALL

ELECTROTHERAPEUTIC GLOVE

Filed Sept. 27, 1923 2 Sheets-Sheet 1

Fig. 1.

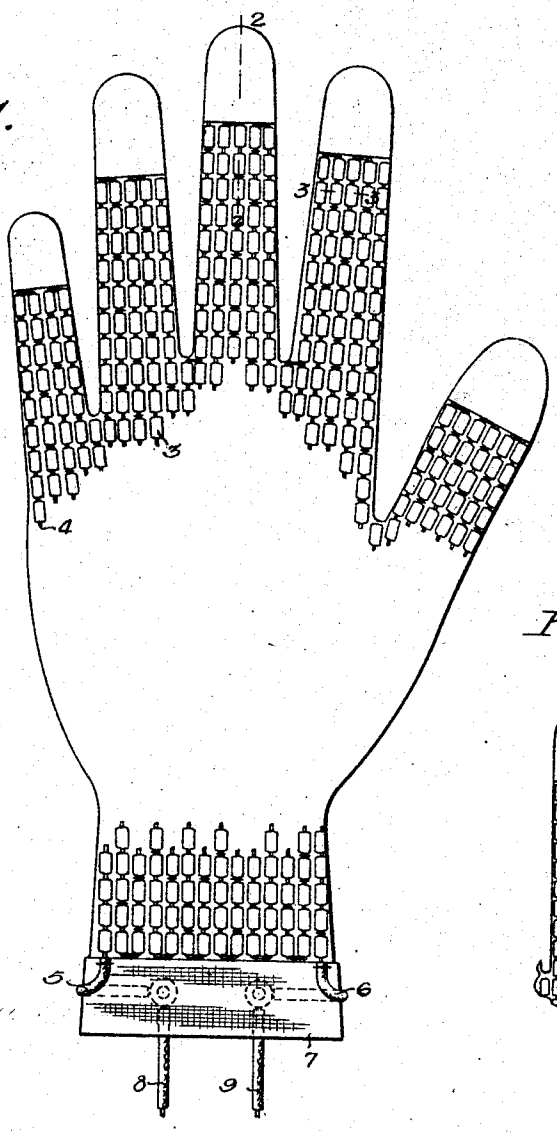

Fig. 2.

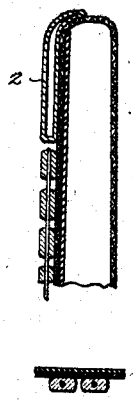

Fig. 3.

Fig. 4.

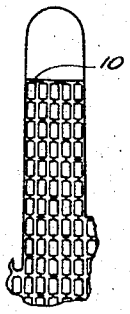

WITNESSES



Fig. 5.



Fig. 6.



Fig. 7.

Frederick B. Ashly

Robert J. Hulsizer

INVENTOR

GUSTAVE W. ELMVALL

BY Munn & Co.

ATTORNEYS

July 7, 1925. 1,545,413

G. W. ELMVALL

ELECTROTHERAPEUTIC GLOVE

Filed Sept. 27, 1923 2 Sheets-Sheet 2

Fig. 8.

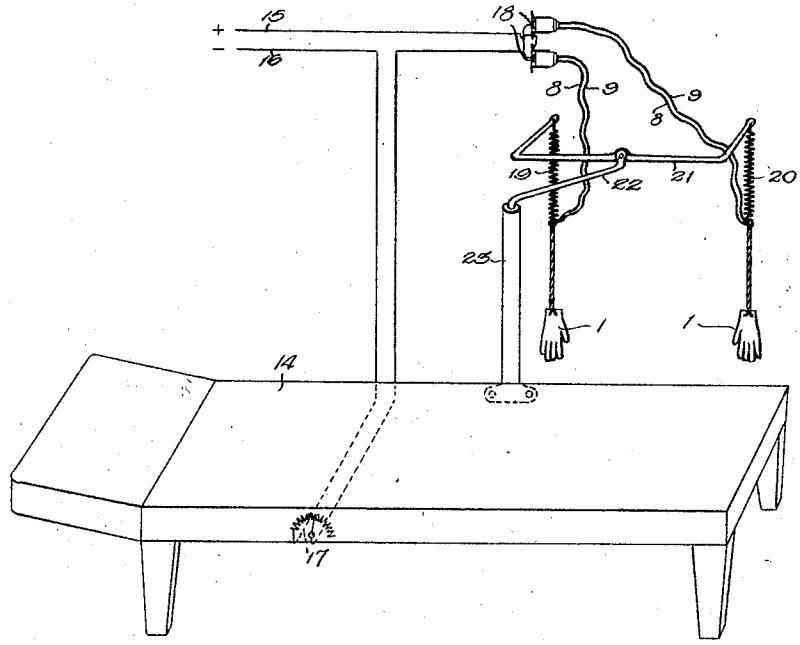

Witnesses:
Frederick B. Kelly
Robert I. Hulsizer.

Inventor
GUSTAVE W. ELMVALL

By Attorneys Munn & Co

Patented July 7, 1925. 1,545,413

UNITED STATES PATENT OFFICE.

GUSTAVE W. ELMVALL, OF NEW YORK, N. Y.

ELECTROTHERAPEUTIC GLOVE.

Application filed September 27, 1923. Serial No. 665,177.

To all whom it may concern:

Be it known that I, GUSTAVE W. ELMVALL, a subject of the King of Sweden, and a resident of the city of New York, borough of Manhattan, in the county and State of New York, have invented a new and Improved Electrotherapeutic Glove, of which the following is a full, clear, and exact description.

This invention relates to an electrotherapeutic glove, and has for an object the provision of a glove which is easily manipulable on the hand for the purpose of massaging various parts of the human body to combine in such treatment a physical rub and an electrotherapeutic action on the skin.

Another object concerns the provision of a device which is simple and strong in its construction, economical to manufacture, and capable of withstanding considerable usage without deterioration.

The invention is illustrated in the drawings, of which—

Figure 1 is an elevation of the glove showing the construction of the palm side thereof;

Figure 2 is a section taken on the line 2—2 of Fig. 1;

Figure 3 is a section taken on the line 3—3 of Fig. 1;

Figure 4 is a modification;

Figures 5 and 6 are modified forms of the skin contacting member;

Figure 7 is a section showing the manner in which a further modified form of skin contacting member may be embodied on the surface of the glove; and

Figure 8 is a diagrammatic illustration of the way in which the gloves are hooked up to the power circuit in actual use.

The form of the invention shown in the drawings is a preferred form, although it is understood that modifications in the construction and arrangement of the parts and in the character of the materials used may be adopted without departing from the spirit of the invention as set forth in the appended claims.

As shown in the drawings, the preferred form applied to the glove is made, preferably, of some flexible material, such as rubber. On the tips of the thumb and the fingers of the glove, on the bottom side thereof, are disposed metal skin-contacting members such as 2, which are preferably hollow and extend from a point adjacent the first joint of each finger and thumb to a point half way around the top of each finger and thumb. The finger-tip contact members are mounted on the fabric of the glove in any suitable manner, such as by cementing, although other methods and means for mounting them thereon may be employed.

On the palm side of the glove, covering the entire hand from the first joint of each finger and thumb, including the wrist, are disposed on the fabric of the glove a large number of skin contacting elements or members such as 3. These are made preferably of metal of any desired shape to give the proper degree of friction or stimulation to the skin. These skin contacting elements may be mounted on wire such as 4 by threading thereon, and are connected, preferably, in a continuous series which is wound or disposed on the surface of the glove in a continuous, closely related manner so that substantially the entire surface is covered by these elements. The ends of the wires are connected to conductors, such as 5 and 6, associated on a wrist band 7 of the glove with current carrying wires 8 and 9. The manner of this connection is immaterial. These current carrying conductors are connected to an electrotherapeutic machine for producing in the skin contacting elements the desired electrical potential. As shown in Figs. 1, 2 and 3, the shape of each skin contacting member may be elongated, having the flat sides presented toward the body of the patient. On the other hand, as shown in Figs. 5 and 6, these members may have a curved or a rectangular formation; or, as shown in Fig. 7, may be button shaped.

As shown in Fig. 4, the contacting elements may be cemented or otherwise separately fastened to the surface of the glove and then connected merely by fine electrical conductors such as 10 to conduct current from one element to the other without these elements being threaded on the wire 4 previously mentioned.

As shown in Fig. 7, the contact element shown as 11 may be connected to the fabric of the glove by mechanical means, such as bent metal portions 12, and the electrical contact between a plurality of such elements is achieved by passing a wire 13 beneath said elements and between them and the fabric.

The reason why differently shaped skin contacting elements are desired to be used for different gloves is because the variation

in shape will vary the degree and the kind of stimulation produced on the skin. The electrical action, however, may be substantially uniform in each case; therefore by providing the glove with different kinds of elements I can vary the skin treatment in its mechanical respects as I may desire.

In the operation of the device, the body of the patient is treated with any suitable lubricant, such as oil or other massage lotion, and then the body is thoroughly massaged with the glove, during which time electrical potential is applied to the contacting elements so that the proper electrotherapeutics is combined with the physical friction and rubbing action.

The gloves 1 are connected respectively to portions of a double socket 18 which is connected to the power lines 15 and 16 through a rheostat 17. The patient lies on a couch 14 and in this location is treated to the massage and therapeutic action of the glove as manipulated by the rubber. By manipulating the rheostat 17 the amount of current applicable to the body of the patient can be controlled, and it also eliminates the danger of excessive potentials reaching the patient.

It will be noted that the gloves connected to the double socket 18 by the wires 8 and 9 are supported resiliently through said wires by means of springs 19 and 20. These springs are supported from opposite ends of a curved pivoted arm 21, pivoted on a rigid but rotatable arm 22, this latter arm being rotatably supported on the upper end of a pedestal 23 which may be fastened to any particular point which, as shown, is the side of the couch 14. The gloves placed on the hand of the rubber can then be very easily manipulated in any desired direction, and by reason of the permissible pivotal action of the arm 21 and the rotation of the arm 22, combined with the flexibility of the springs 19 and 20, the utmost freedom of movement is made possible. The wires thus are kept supported from the floor so that they are not in the way at any time.

What I claim is:—

1. An electrotherapeutic glove which includes a flexible backing and a plurality of metallic hollow skin contact members disposed on one side of the fingers and thumb of said glove and extending from the first joint to a point approximately midway of the tip of the finger and the thumb for the purpose of providing metallic tips, and a plurality of skin contact elements mounted on the remainder of said side of the glove, all the skin contact elements being mechanically and electrically connected in a series.

2. An electrotherapeutic glove which includes a flexible backing and a plurality of metallic hollow skin contact members disposed on one side of the fingers and thumb of said glove and extending from the first joint to a point approximately midway of the tip of the finger and the thumb for the purpose of providing metallic tips, a plurality of skin contact elements mounted on the remainder of said side of the glove, all the skin contact elements being mechanically and electrically connected in a series, and means for connecting said elements to a source of electrical energy.

GUSTAVE W. ELMVALL.