Jan. 19, 1932. C. E. WAXBOM 1,841,462

SEPARATOR

Filed May 20, 1926

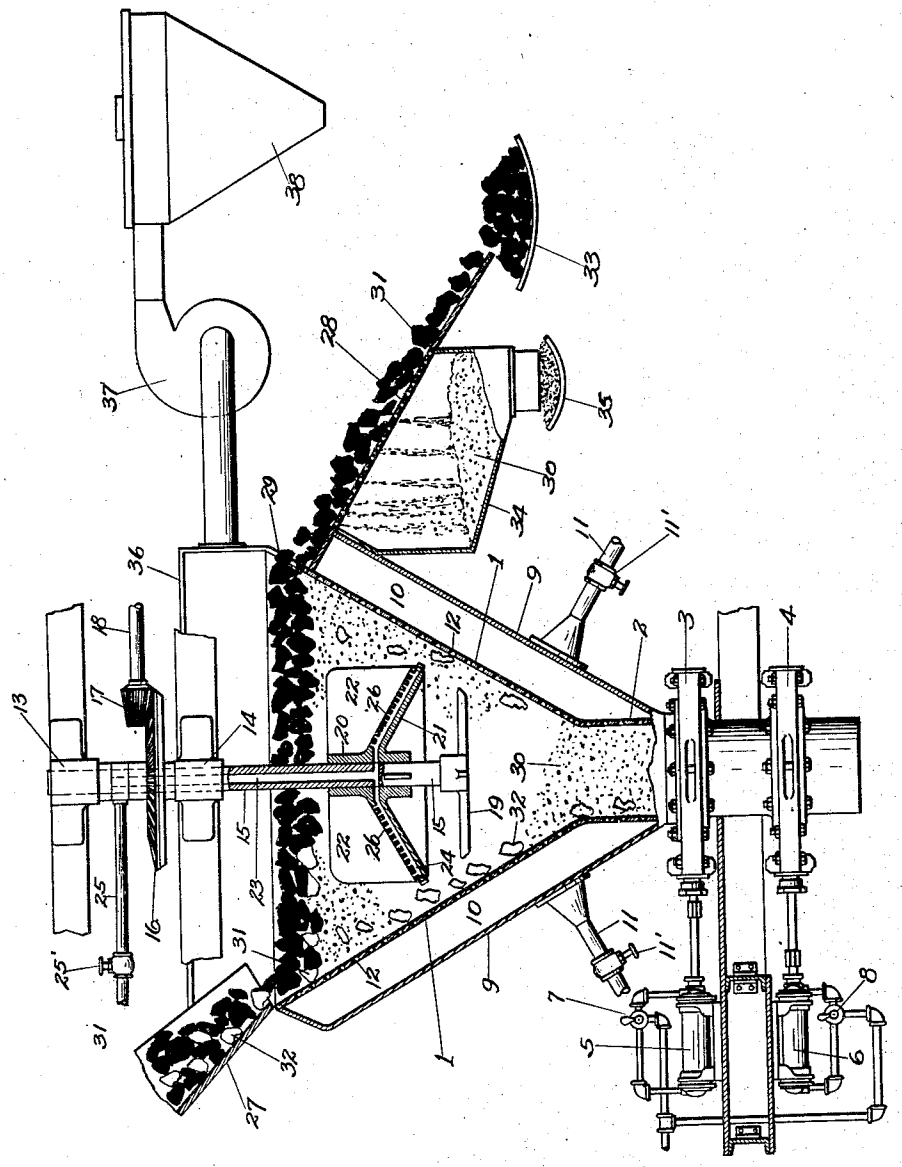

Inventor
Charles E. Waxbom
By Cushman, Bryant & Darby
Attys

WITNESSES
R. D. Nichols
Dudley T. Fisher

Patented Jan. 19, 1932 1,841,462

UNITED STATES PATENT OFFICE

CHARLES E. WAXBOM, OF COLUMBUS, OHIO, ASSIGNOR TO THE JEFFREY MANUFACTURING COMPANY, OF COLUMBUS, OHIO, A CORPORATION OF OHIO

SEPARATOR

Application filed May 20, 1926. Serial No. 110,445.

The present invention relates to certain new and useful improvements in separators, and particularly to separators adapted to separate material having different specific gravities.

In the apparatus heretofore commonly used for separating relatively heavy impurities from coal, water has been relied upon as the active separating agency. Such apparatus is unsatisfactory because of the inclusion with the finished product of considerable quantities of water. Such water is objectionable at all times, but especially so in winter when its freezing cements the fragments of coal into a solid mass difficult to break up and handle. Numerous attempts have been made to substitute, in such apparatus, currents of air for currents of water, but all such devices with which I am familiar contain certain inherent defects which it is the object of this invention to overcome.

The especial object of this invention is to provide a convenient, economical and efficient apparatus for the removal of slate, or other heavy refuse material, from coal, without the addition of water to the finished product.

The means whereby I attain this object is fully set forth in the following specification, and illustrated in the accompanying drawing which shows a transverse section taken in a vertical plane of one embodiment of my invention.

In the drawing the numeral 1 refers to a tank, made of suitable sheet metal, preferably of truncated conical form, with its apex downward. The tank 1 terminates downwardly in a refuse chamber 2, closed by a pair of independently operable valves 3 and 4 whereby the discharge of refuse material may be controlled in the manner well understood in the art. The valves 3 and 4 may be actuated in any preferred and suitable manner. As here shown I have provided pneumatic rams 5 and 6, the pistons of which are connected to the valves 3 and 4 respectively, and which are supplied with actuating fluid under the control of the valves 7 and 8. It is to be understood, however, that any other suitable means may be employed for the removal of refuse material from the lower end of the tank 1 without departure from the spirit of my invention.

The tank 1 is inclosed in a jacket 9 forming an air chamber 10 which entirely surrounds the tank, and this air chamber is connected with a suitable source of compressed air by means of the supply pipes 11 and the regulating valve 11′. The wall of the tank 1 is perforated throughout its entire area by a large number of regularly spaced apertures 12 of relatively small dimensions, through which jets of air may be directed from the air chamber 10 towards the center of the tank 1. Mounted in suitable journal bearings 13 and 14, supported in any convenient and suitable manner, is a vertical shaft 15 positioned concentric with, and projecting downwardly into the tank 1. Means for the rotation of the shaft 15 is provided, in this instance, by the bevel gear 16 and pinion 17 which are connected with a suitable source of rotative power through the shaft 18. To the lower end of the shaft 15 is fixed a spider 19, having stirring fingers adapted to agitate the contents of the lower portion of the tank when the shaft revolves. Fixed to the shaft 15 immediately above the stirring spider 19, is a hub 20 on which is formed a relatively flat conical baffle 21 having its apex directed upwardly, and to the hub 20 and baffle 21 are attached stirring blades 22 which assist in the agitation of the contents of the upper portion of the tank. The baffle 21 is of a diameter somewhat less than the diameter of the tank in the same horizontal plane, thereby providing a passage between the edge of the baffle and the side of the tank of sufficient width to permit movement of the refuse material into the refuse chamber. The shaft 15 is formed with a longitudinally extending air passage 23 communicating at its lower end with radially extending passages 24 formed in the baffle 21, and at its upper end, with a source of compressed air supply through the feed pipe 25 and the regulating valve 25′. A multiplicity of apertures 26 of relatively small dimensions, open from the radial passages 24 to discharge jets of air upwardly of the tank.

A chute 27 is arranged to deliver material

to be separated at one side of the upper edge of the tank 1, and a discharge chute 28 at the opposite side of the tank, provides means of escape for the separated product.

In operation of the apparatus above described, the tank 1 is first filled to the level of the discharge outlet 29 with sand 30, or similar heavy granular material. The mixed material which is to be separated, such as the coal 31 intermingled with the fragments of slate 32, stone or other relatively heavy material, is fed to the surface of the sand 30 by the chute 27. As the shaft 15 revolves the stirring blades 22 distribute this material over the entire surface of the sand, and agitate the entire mass contained within the tank. At the same time the upflow of the air tends to lift the sand, and with it the material floating upon its surface, thereby affording opportunity for the relatively heavy refuse material to sink towards the bottom of the tank, and into the refuse chamber, to be removed therefrom through valves 3 and 4. The coal, which is of less specific gravity than either the sand or the refuse material, flows across the supporting surface of the sand, and finds its way to and over the discharge chute 28, and may be disposed of in any preferred manner as by the belt conveyor 33. More or less of the sand 30 will usually escape from the tank 1 with the coal, and this sand may be recovered, in a suitable hopper 34 through screening apertures in the chute 28 to be returned to the tank 1 by any suitable means such as by the belt conveyor 35.

The jets of air flowing upwardly from the apertures 12 and 26, tend to lift the granules of sand, and thereby reduce the effective specific gravity of the mass. By manipulation of the valves 11′ and 25′ the pressure of air flowing through these apertures may be regulated to adjust the relation between the specific gravity of the sand and that of the material being separated. I have found that the stirring action of the arms 19 and 22 greatly facilitates downward movement of the fragments of refuse 32, causes the clean coal to flow to and through the outlet passage 29, and at the same time greatly increases the efficiency of the action of the air.

In order to prevent the escape of coal dust with the air arising from the top of the tank 1, I have provided a hood 36 which constitutes an air receiver, and this receiver is connected with a suitable exhaust apparatus 37, and with a dust collector 38 which may be of any preferred type.

By the use of the apparatus above described I am enabled to efficiently and economically separate the heavier refuse from the coal, the latter being delivered to the discharge conveyor in perfectly dry condition suitable for immediate shipment or use in the coldest winter weather.

In the described apparatus, I wish to emphasize particularly the combination of the agitating head shown as disposed below the normal surface of the sand. Upon rotation of the shaft 15, the blades 22 create a substantially undulatory movement of the sand surface, whereby the coal is most effectively distributed and allowed to pass out of the tank. In operation, I keep the sand level substantially as shown at all times. A certain amount of sand, of course, escapes when the refuse chamber is emptied, and this may be recovered and returned to the hopper together with that recovered on conveyor 35. Thus, by proper coordination of the sand feeding devices, the sand in the tank will be maintained at its most effective level.

While I have described and illustrated various specific elements, it is to be understood that I do not restrict myself thereto, but may make use of various equivalents which may occur to one skilled in the art.

What I claim is:

1. Apparatus for separating mixed materials having different specific gravity, comprising a receptacle containing a body of dry granular material having an effective specific gravity intermediate those of the materials to be separated, means for feeding the mixed materials onto said body, and a substantially horizontal stirring arm adapted to move below the surface of said body and impart undulatory movement to the surface of the latter and thereby agitate and distribute the mixed materials, whereby the heavier constituents thereof are enabled to settle out of the lighter constituents, and into said body, the lighter constituents being permitted to escape from said container over the surface of said body.

2. In an apparatus for separating constituent elements of different specific gravity from a mixed mass of material, the combination with a tank containing dry granular material having an effective specific gravity between those of the materials to be separated, stirring devices arranged to agitate said granular material, an air chamber surrounding said tank, means to supply compressed air to said air chamber, said tank having apertures in the walls thereof through which air may flow from said air chamber into said granular material to suitably adjust its effective specific gravity, means to feed the mixed material which is to be separated onto the surface of said granular material, an outlet through which the heavy constituents may be discharged, and an outlet through which the lighter constituents may escape as and for the purpose set forth.

3. In an apparatus for separting constituent elements of different specific gravity from a mixed mass of material, the combination with a tank containing a dry granular material having an effective specific gravity

between those of the materials to be separated, stirring devices arranged to agitate said granular material, an air chamber surrounding said tank, means to supply compressed air to said air chamber, means to control the air pressure in said chamber, said tank having apertures in the walls thereof through which air may flow from said chamber into said granular material to suitably adjust its effective specific gravity, means to feed the mixed material which is to be separated onto the surface of said granular material, an outlet through which the heavy constituents may be discharged, and an outlet through which the lighter constituents may escape as and for the purpose set forth.

4. In an apparatus for separating constituent elements of different specific gravity from a mixed mass of material, the combination with a conical tank containing a dry granular material having an effective specific gravity between those of the materials to be separated, stirring devices arranged to agitate said granular material, an air chamber surrounding said tank, means to supply compressed air to said air chamber, there being apertures in the walls of said tank through which air may flow from said air chamber into said granular material to suitably adjust its effective specific gravity, means to feed the mixed material which is to be separated onto the surface of said granular material, a refuse chamber beneath said tank adapted to receive heavy constituents, and an outlet through which the lighter constituents may escape from the tank as and for the purpose set forth.

5. In an apparatus for separating constituent elements of different specific gravity from a mixed mass of material, the combination with a conical tank containing a dry granular material having an effective specific gravity between those of the materials to be separated, stirring devices arranged to agitate said granular material, an air chamber surrounding said tank, means to supply compressed air to said chamber, means to control the air pressure in said chamber, there being apertures in the walls of said tank through which air may flow from said air chamber into said granular material to suitably adjust its effective specific gravity, means to feed the mixed material which is to be separated onto the surface of said granular material, a refuse chamber beneath said tank adapted to receive the heavier constituents, and an outlet through which the lighter constituents may escape from said tank as and for the purpose set forth.

6. In an apparatus for separating constituent elements of different specific gravity from a mixed mass of material, the combination with a tank containing a substantially constant volume body of dry granular material having an effective specific gravity between those of the materials to be separated, stirring devices arranged to agitate said granular material and disposed wholly below the surface of the latter, there being a multiplicity of apertures in the walls of said tank, means to force jets of air through said apertures into said granular material to suitably adjust its effective specific gravity, means to control the velocity of the air flowing through said apertures, means to feed the mixed material which is to be separated onto the surface of said granular material, an outlet through which the heavy constituents may be discharged, and an outlet through which the lighter constituents may escape as and for the purpose set forth.

7. In an apparatus for separating constituent elements of different specific gravity from a mixed mass of material, the combination with a conical tank containing a substantially constant volume body of dry granular material having an effective specific gravity between those of the materials to be separated, there being apertures in the walls of said tank, means to cause air to flow through said apertures into said granular material to suitably adjust its effective specific gravity, a shaft mounted concentric with said tank, means to rotate said shaft beneath the surface of said granular material, stirring devices attached to said shaft adapted to agitate said granular material, means to feed the mixed material which is to be separated onto the surface of said granular material, a refuse chamber beneath said tank adapted to receive the heavier constituents, and an outlet through which the lighter constituents may escape from the tank as and for the purpose set forth.

8. In an apparatus for separating constituent elements of different specific gravity from a mixed mass of material, the combination with a conical tank containing a substantially constant volume body of dry granular material having an effective specific gravity between those of the materials to be separated, a shaft mounted concentric with said tank, means to rotate the shaft, stirring devices attached to said shaft beneath the surface of said granular material adapted to agitate said granular material, means to discharge air under pressure through said granular material to suitably adjust its effective specific gravity, means to feed the mixed material which is to be separated onto the surface of said granular material, a refuse chamber beneath said tank, adapted to receive the heavier constituents, and an outlet through which the lighter constituents may escape from said tank as and for the purpose set forth.

9. In an apparatus for separating constituent elements of different specific gravity from a mixed mass of material, the combina-

tion with a conical tank containing a dry granular material having an effective specific gravity between those of the materials to be separated, a shaft mounted concentric with said tank, means to rotate said shaft, stirring devices attached to said shaft adapted to agitate said granular material, an air passage extending longitudinally of said shaft, means to cause air to flow through said passage into said granular material to suitably adjust its effective specific gravity, means to feed the mixed material which is to be separated onto the surface of said granular material, an outlet through which the heavy constituents may be discharged, and an outlet through which the lighter constituents may escape as and for the purpose set forth.

10. In an apparatus for separating constituent elements of different specific gravity from a mixed mass of material, the combination with a conical tank containing a dry granular material having an effective specific gravity between those of the materials to be separated, a shaft mounted concentric with said tank, means to rotate said shaft, stirring devices attached to said shaft adapted to agitate said granular material, an air passage extending longitudinally of said shaft and terminating in discharge orifices in said stirring devices, means to cause air to flow through said passage and orifices into said granular material to suitably adjust its effective specific gravity, means to feed the mixed material which is to be separated onto the surface of said granular material, a refuse chamber beneath said tank adapted to receive the heavier constituents, and an outlet through which the lighter constituents may escape from the tank as and for the purpose set forth.

In testimony whereof I have hereunto set my hand.

CHARLES E. WAXBOM.