(12) UK Patent Application (19) GB (11) 2 317 820 (13) A

(43) Date of A Publication 08.04.1998

(21) Application No 9718666.2

(22) Date of Filing 04.09.1997

(30) Priority Data
(31) 08236674 (32) 06.09.1996 (33) JP

(71) Applicant(s)
Kabushiki Kaisha Tokai-Rika-Denki-Seisakusho

(Incorporated in Japan)

1 Aza-Noda, Ohaza-Toyota, Ohguchi-cho, Niwa, Aichi-ken, Japan

(72) Inventor(s)
Tokuhiro Amano

(74) Agent and/or Address for Service
Lewis & Taylor
144 New Walk, LEICESTER, LE1 7JA, United Kingdom

(51) INT CL^6
B60N 2/30 2/26

(52) UK CL (Edition P)
A4L LAAR LBPB LBP7 LBRD L108 L109 L144

(56) Documents Cited
CA 002159149 A US 5468046 A US 5290090 A

(58) Field of Search
UK CL (Edition P) A4L LAAR LBMA LBMB LBMF LBMG LBPB LBPC LBPF LBRD
INT CL^6 B60N 2/26 2/30
Online: WPI

(54) Reclining child seat stowed in a vehicle seat

(57) A child seat 10 which is integrally mounted to a vehicle seat 12 is capable of being independently reclined. A back portion 18 is axially supported above a seat back of the vehicle seat, a cushion portion 16 is axially supported below the back portion, and a holding means removably holds positions of the back portion and the cushion portion at a normal position and a reclining position. Accordingly, a child seat body portion is structured such as to be independently reclined.

F I G. 2

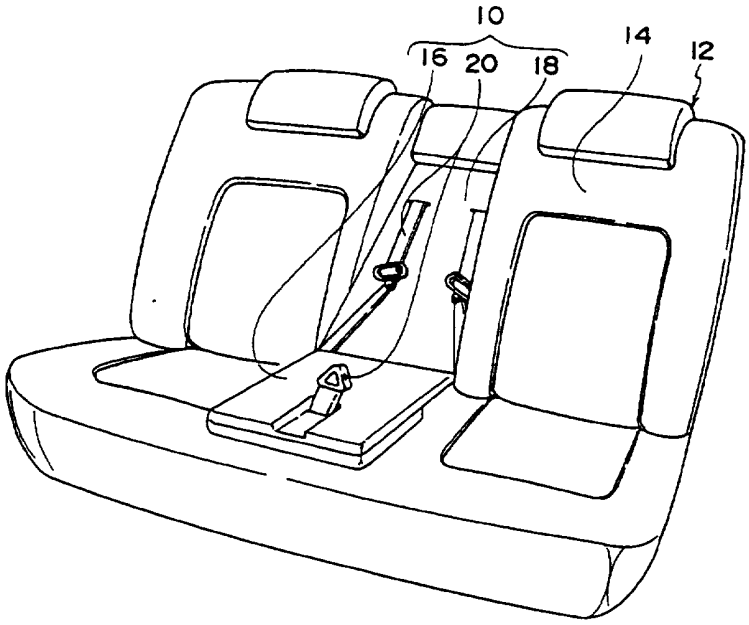

GB 2 317 820 A

FIG. 1

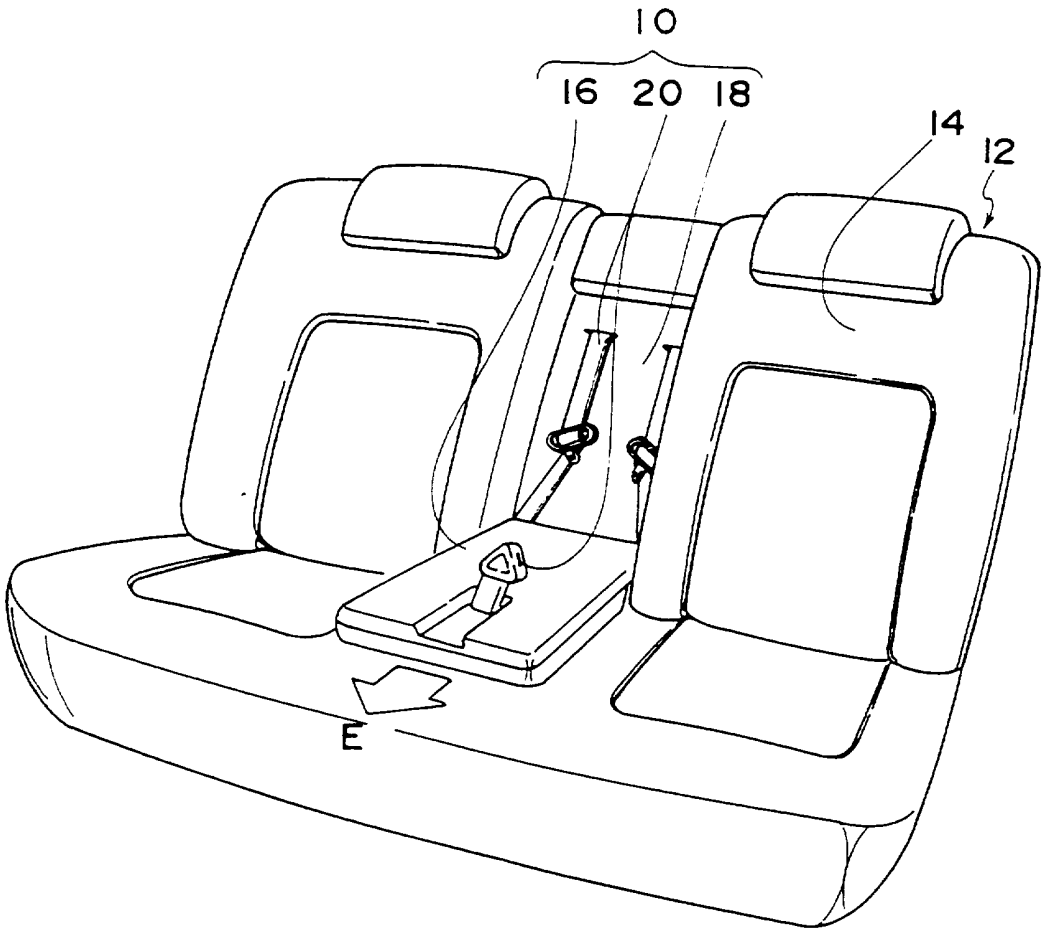

FIG. 2

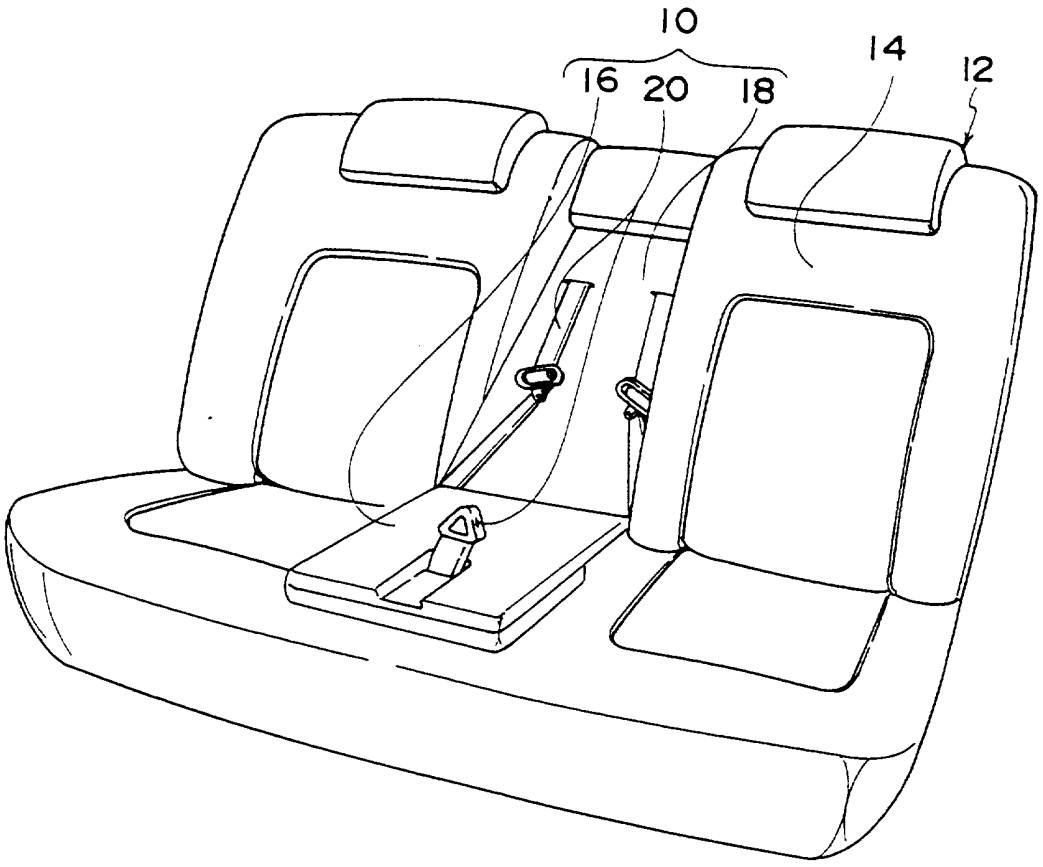

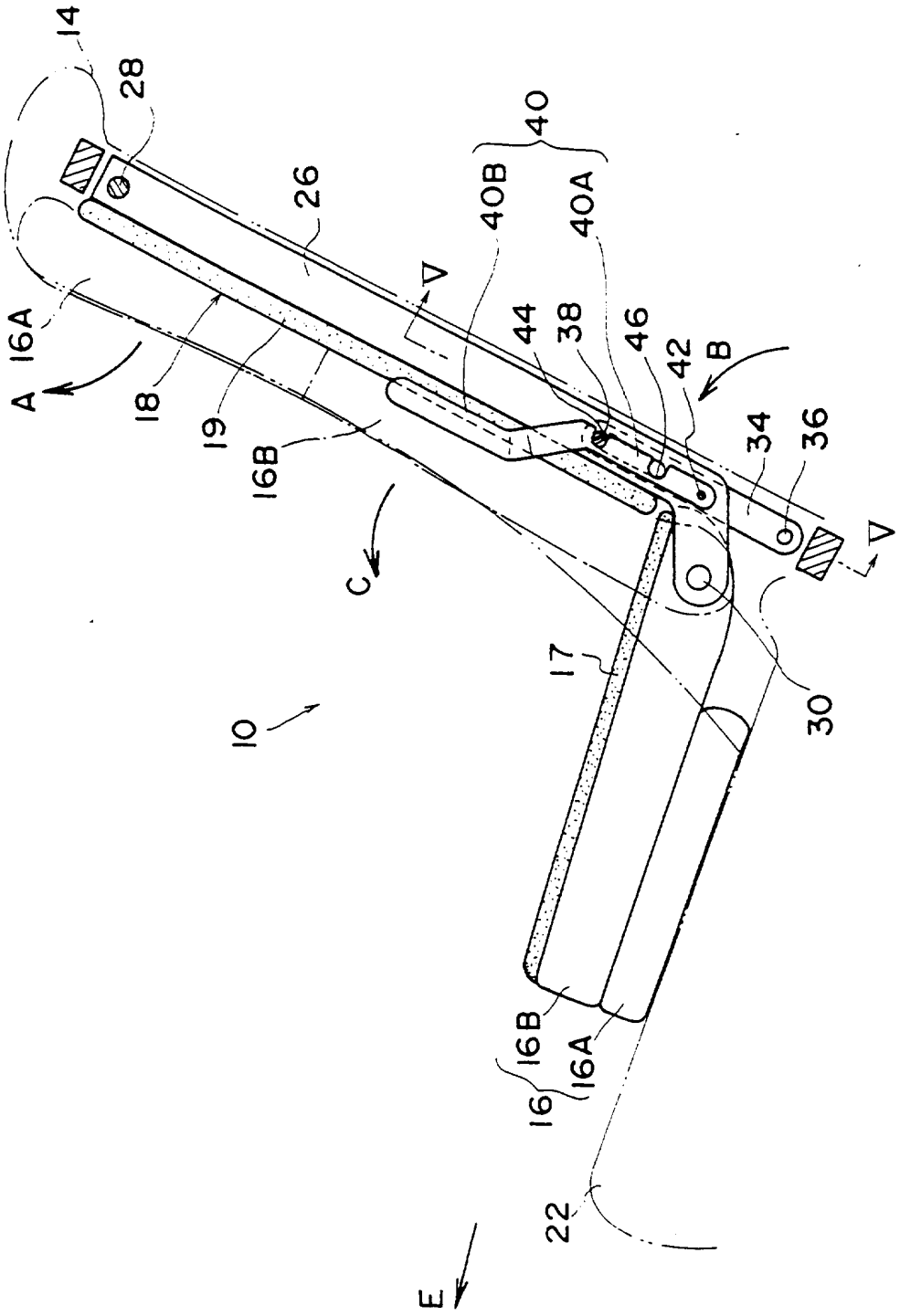
14
28
26
40
40B
40A
V
44
38
46
42
B
16A
A
18
19
16B
34
36
V
C
17
30
10
16B
16A
16
22
E

FIG. 3

FIG. 4

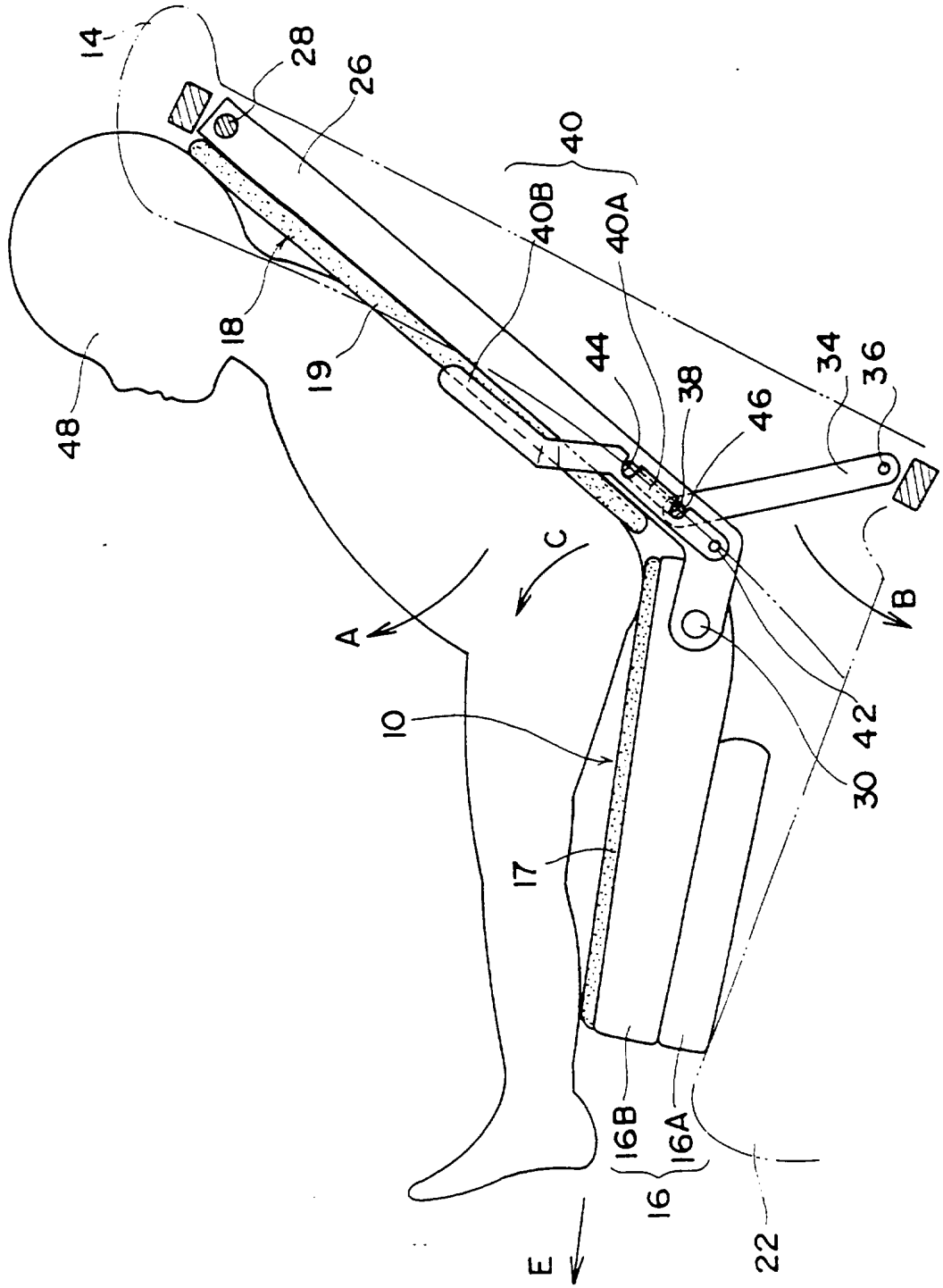
14
28
26
40
40B
40A
18
19
48
44
38
46
34
36
C
A
B
10
30
42
17
16B
16A
16
22
E

FIG. 5

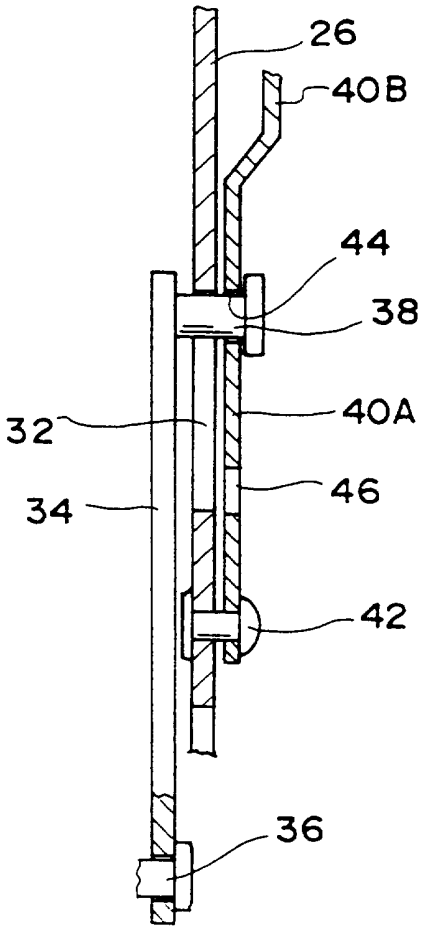

FIG. 6

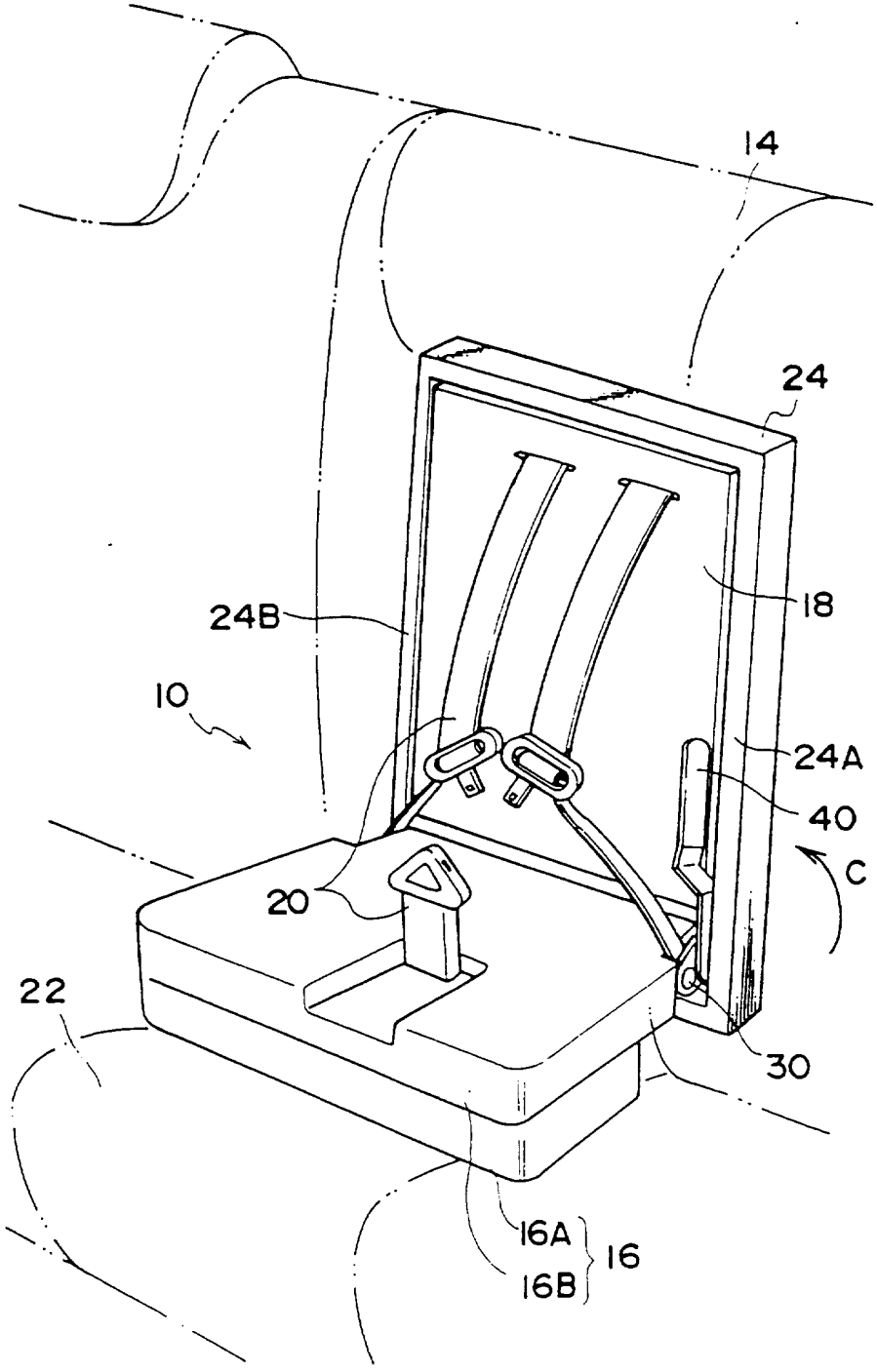

FIG. 7

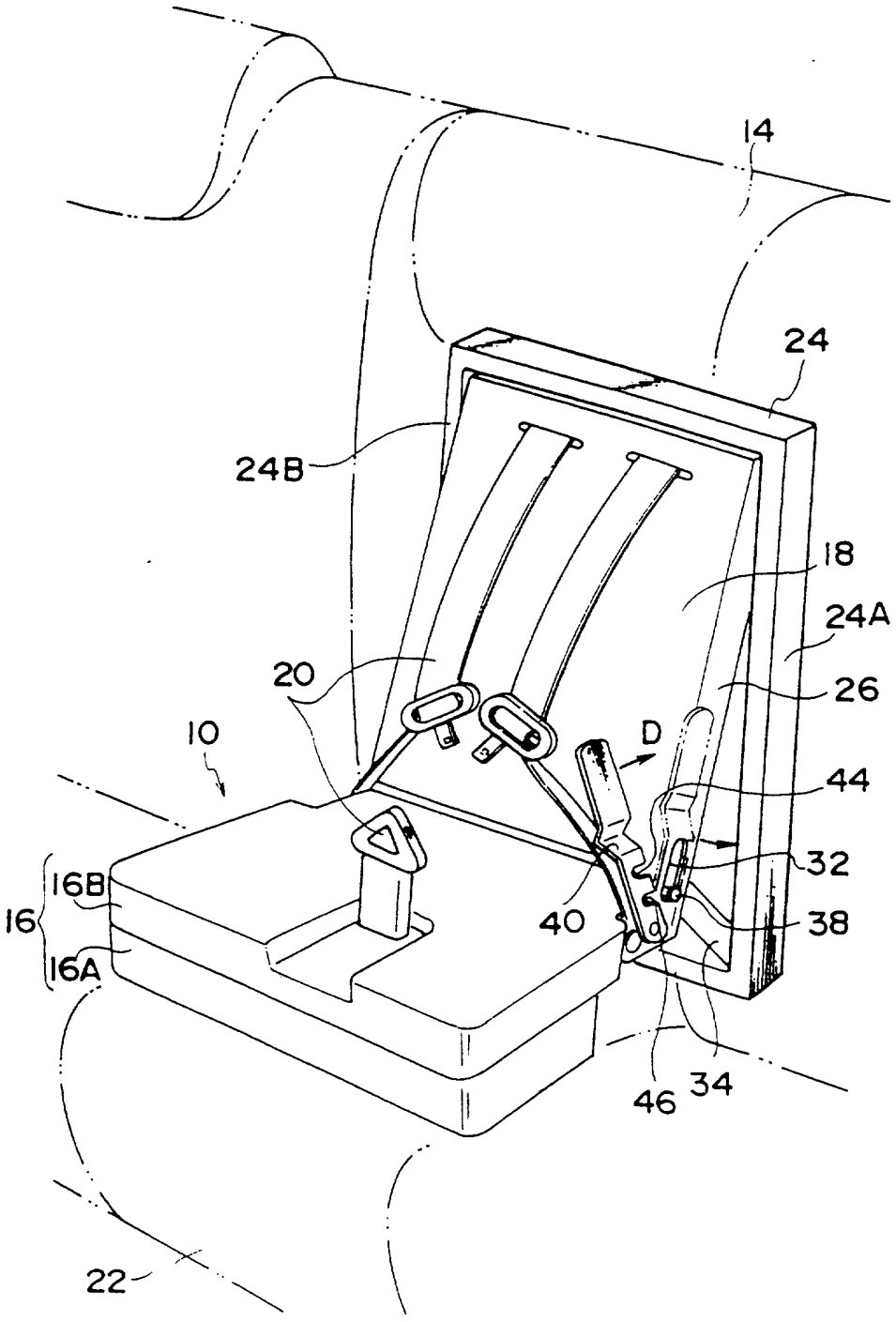

FIG. 8

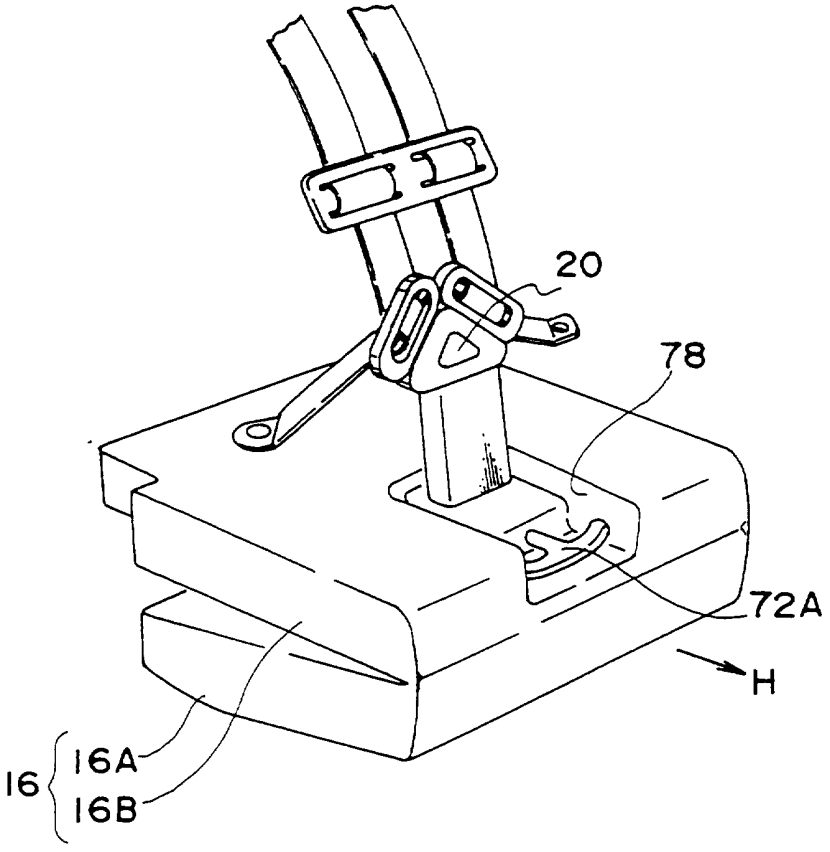

FIG. 9

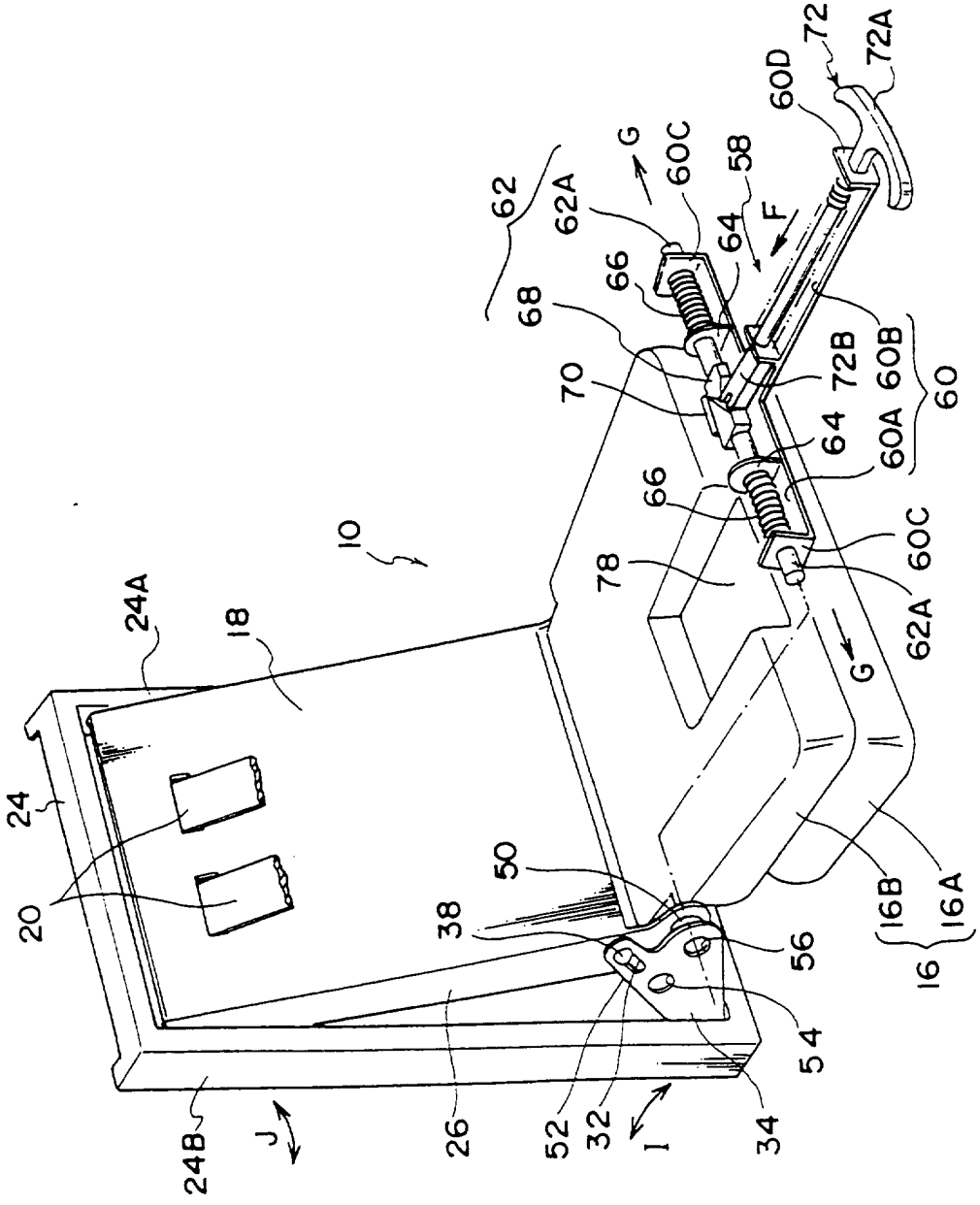
10
24A
18
24
20
24B
J
26
38
50
52
32
I
34
54
56
16B
16A
16
60
60A
60B
60C
60D
62
62A
64
66
68
70
72
72A
72B
58
F
G
78

FIG. 10

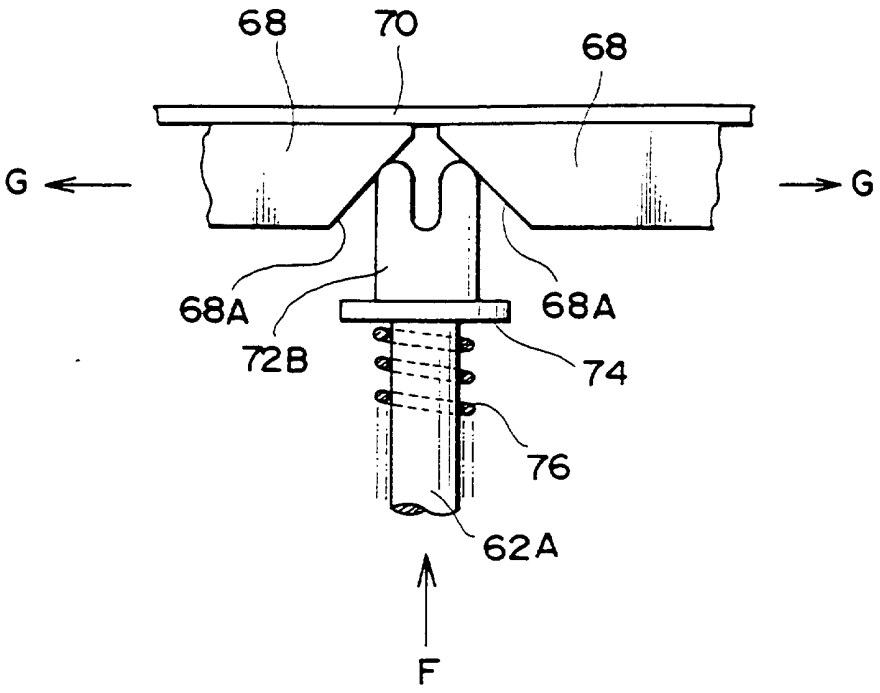

SEAT FOR A VEHICLE WITH A CHILD SEAT

The present invention relates to a seat for a vehicle with a built-in type child seat.

It is common in riding a child on a vehicle to use a child seat for fitting to a child's body. Conventional child seats include a child seat (a built-in seat) which is integrally mounted to a vehicle seat, for example, a bench seat of a vehicle.

This kind of child seat is structured such that a part of a seat back portion of the bench seat is pushed down toward a seat cushion and the pushed down seat back portion is used as a seat surface of the built-in seat. Then, a child seated on this child seat is held by engaging a buckle on the built-in seat surface of the seat back portion with a hook of a webbing mounted on a backrest portion which is hidden by the seat surface.

Further, in the case of reclining the child seat integrally mounted to the bench seat, since the seat back of the bench seat and the backrest portion of the child seat are integrally formed and can not be separated, an inclination degree of the whole of the seat back of the bench seat including the backrest portion of the child seat is adjusted so as to give an attitude appropriate to lay the child down.

In the bench seat provided with the conventional built-in type child seat mentioned above, in order to set the child seat to a position inclined rearward by operating the reclining device for laying the child down or the like, it is necessary to push down the whole of the seat back. Accordingly, the other occupants seated on the bench seat provided with the child seat have to take a reclining attitude.

Still further, in the case that a seat for a vehicle for a single occupant is provided with a built-in type child seat but is not provided with a reclining device, since the child seat can not take a reclining attitude, it is impossible to lay the child down in a comfortable attitude.

The present invention is made by taking the above problems into consideration and an object of the present invention is to provide a child seat which is integrally mounted to a seat of a vehicle, the child seat being capable of independently reclined so as to take a comfortable attitude.

A vehicle seat with a child seat in accordance with a first aspect of the present invention comprises a back portion axially supported at a position close to a head portion in a seat back portion for the vehicle seat having a seat cushion on which an occupant seats and a seat back serving as a backrest;

a cushion portion axially supported at a position close to the seat cushion in the back portion; and

a holding means for releasably holding the positions of

the back portion and the cushion portion between a normal position in which the back portion and the cushion portion are pulled to the seat back side and a reclining position in which the back portion and the cushion portion are pushed out to a direction apart from the seat back.

In accordance with the above structure, the child seat portion which is integrally mounted to the vehicle seat can independently be set to a reclining attitude so as to give the child seating on the child seat a comfortable attitude.

A vehicle seat with a child seat in accordance with a second aspect of the present invention comprises a main link having an end portion which is axially supported to a portion opposing to a seat cushion in a seat back of the vehicle seat;

a back portion fixed to the main link;

a cushion portion axially supported to the other end of the main link;

a holding link having an end portion which is axially supported to the seat back in a seat cushion side;

an interlocking means for interlocking the other end portion of the main link and the other end portion of the holding link in a sliding manner; and

a holding means for releasably stopping a relative motion between the main link and the holding link when the back portion and the cushion portion are in a normal position or in a reclining position.

In accordance with the above structure, the relative motion between the main link and the holding link can be stopped

by the holding means so as to set the back portion and the cushion portion to a normal position or reclining position so that a comfortable attitude can be obtained.

A vehicle seat with a child seat in accordance with a third aspect of the present invention comprises a main link having an end portion which is axially supported to a portion opposing to a seat cushion in a seat back of the vehicle seat;

a back portion fixed to the main link;

a cushion portion axially supported to the other end of the main link;

a holding link having an end portion which is axially supported to the seat back in a seat cushion side;

a long hole provided on one of the other end portion of the main link and the other end of the holding link and a mooring pin provided on the other thereof in a projecting manner and slidably inserted to the long hole, for interlocking the other end portion of the main link and the other end portion of the holding link in a sliding manner; and

an adjusting lever for removably engaging with the mooring pin when the back portion and the cushion portion are in a normal position or in a reclining position so as to hold the normal position or the reclining position.

In accordance with the above structure, the back portion and the cushion portion can be easily set to a normal position or a reclining position only by engaging the adjusting lever with the mooring pin or removing the adjusting lever from the mooring pin.

A vehicle seat with a child seat in accordance with a fourth aspect of the present invention comprises a main link having an end portion which is axially supported to a portion opposing to a seat cushion in a seat back of the vehicle seat;

a back portion fixed to the main link;

a cushion portion axially supported to the other end of the main link;

a holding link having an end portion which is axially supported to the seat back in a seat cushion side;

a long hole provided on one of the other end portion of the main link and the other end of the holding link and a mooring pin provided on the other thereof in a projecting manner and slidably inserted to the long hole, for interlocking the other end portion of the main link and the other end portion of the holding link in a sliding manner; and

a holding mechanism having a lock member and an operating member which are structured such that the lock member is simultaneously inserted to a through hole provided on the other end portion of the main link and a mooring hole provided on the holding link communicated thereto when the back portion and the cushion portion are in a normal position and is further simultaneously inserted to a mooring hole separately provided on the holding link communicated with the through hole of the main link when they are in a reclining position, and that the operating member detachably operates the lock member from the mooring hole.

In accordance with the above structure, the back portion

and the cushion portion can be easily set to a normal position or a reclining position by simultaneously inserting the lock member of the holding mechanism to the through hole of the main link and the selected mooring hole of the holding link or removing it therefrom by means of the operating member.

In the vehicle seat with the child seat in accordance with any one of the first aspect to the fourth aspect of the present invention, a fifth aspect of the present invention is structured such that the cushion portion is piled up by folding in a middle portion thereof so as to provide a seat surface having a suitable size for a child.

In accordance with the above structure, an area of the seat surface can be reduced by folding the cushion portion in a middle portion thereof so as to pile up and further a height of the seat surface can be increased so that the size of the seat surface suitably corresponding to a child can be set.

The above and other objects, features and advantages of the present invention will become apparent from the following description and the appended claims, taken in conjunction with the accompanying drawings in which preferred embodiments of the present invention are shown by way of illustrative example.

The invention will now be described by way of example with reference to the accompanying drawings wherein:

Fig. 1 is a totally perspective view which shows a vehicle seat with a child seat in accordance with a first embodiment

of the present invention when the child seat is in a normal position;

Fig. 2 is a totally perspective view which shows the vehicle seat with the child seat in accordance with the first embodiment of the present invention when the child seat is in a reclining position;

Fig. 3 is a schematically side elevational view which shows a main part of the vehicle seat with the child seat in accordance with the first embodiment of the present invention when the child seat is in the normal position;

Fig. 4 is a schematically side elevational view which shows a main part of the vehicle seat with the child seat in accordance with the first embodiment of the present invention when the child seat is in the reclining position;

Fig. 5 is a sectional view which shows a main part of a section along a line V-V in Fig. 3;

Fig. 6 is a perspective view which shows a main part of the vehicle seat with the child seat in accordance with the first embodiment of the present invention when the child seat is in the normal position;

Fig. 7 is a perspective view which shows a main part of the vehicle seat with the child seat in accordance with the first embodiment of the present invention when the child seat is in the reclining position;

Fig. 8 is a perspective view which shows a main part of a cushion portion of a vehicle seat with a child seat in accordance with a second embodiment of the present invention;

Fig. 9 is a schematically perspective view which explains a mechanism of a main part of the vehicle seat with the child seat in accordance with the second embodiment of the present invention; and

Fig. 10 is a plan view which shows a main part of a interlocking portion between a lock member and a guide member of the vehicle seat with the child seat in accordance with the second embodiment of the present invention.

Figs. 1 to 7 show a first embodiment of a vehicle seat with a child seat in accordance with the present invention. As shown in Figs. 1 and 2, a child seat body 10 in accordance with the present embodiment is disposed in a center of a sofa shaped bench seat 12 on which a plurality of occupants can sit. The shown bench seat 12 is structured such that occupants of adults can seat in both sides of the child seat body 10. In the case that the bench seat 12 is disposed at a position of a rear seat within a vehicle cabin, and a driver's seat (not shown) and an assistant driver's seat (not shown) are disposed in front of the bench seat, a child sitting on the child seat can comfortably extend his or her legs to a space between the driver's seat and the assistant driver's seat. Accordingly, when the child sits in a reclining attitude, tight feeling due to that the leg of the child is obstructed by a back surface of a seat back of the front seat can be prevented.

The child seat body 10 comprises a cushion portion 16

housed in a central portion of a seat back 14 of the bench seat 12, a back portion 18 mounted to a part of the seat back 14 and a seat belt device 20 for a child seat.

As shown in Fig. 3, the cushion portion 16 has an upper cushion portion 16A and a lower cushion portion 16B connected by a hinge or the like (not shown) in such a manner as to form a two piled portion. The cushion portion 16 is structured such that as shown in a solid line of Fig. 3, the upper cushion portion 16A is folded to a space between a seat cushion 22 of the bench seat 12 and the lower cushion portion 16B so as to form a seat portion of the child seat. Further, the lower cushion portion 16B is provided with a cushion member 17.

Still further, as shown in an alternate long and short dash line of Fig. 3, an upper cushion portion 16A and a lower cushion portion 16B are linearly extended so as to be housed in such a manner as to integrally form the seat back 14. In this state, the cushion portion 16 constitutes a part of the seat back 14 and serves as a backrest portion.

The back portion 18 of the child seat body 10 is structured as a backrest portion having a totally rectangular shape and provided with a cushion member 19.

The cushion portion 16 and the back portion 18 structure as mentioned above are assembled to a reclining device serving as a holding means for removably holding the cushion portion 16 and the back portion 18 by using a link mechanism and are structure such as to be capable of adjusting between a normal position and a reclining position.

As also shown in Figs. 3, 4, 6 and 7, the seat back 14 for constituting the reclining device is fixedly provided with a frame body 24 having a rectangular frame shape. The frame body 24 is formed to have a size suitable for just housing the back portion 18. An end portion of a main link 26 is axially supported to inner corner end portions of two vertical members 24A and 24B of the frame body 24 opposing to the seat cushion 22 by axial pins 28.

The main link 26 is integrally disposed in both vertical side portions of the back portion 18, respectively. Accordingly, the back portion 18 is rotatably supported around the axial pins 28. The main link 26 is formed as a long plate shape and the other end portion thereof is bent to form a hook. An end portion of the cushion portion 16 is axially supported between free end portions of the bent other portion in the two main link 26 by axial pins 30. Further, the main link 26 disposed at a right side with facing Fig. 6 is provided with a long hole 32 which extends through a meddle predetermined position close to the hook bent end portion.

Further, to the inner corner end portion of the vertical member 24A of the frame body 24 disposed at a right side with facing Fig. 6 and close to the seat cushion 22, an end portion of a holding link 34 is axially supported by an axial pin 36 as shown in Fig. 4. A mooring pin 38 is provided in the other end portion of the holding link 34 in such a manner as to project from the side surface thereof.

As shown in Fig. 5, the mooring pin 38 is a pin having

a flange formed on a free end portion of a round axis, and is structured such as to extend through the long hole 32 of the main link 26 and to constitute a interlocking means for interlocking the main link 26 and the holding link 34 in a sliding manner and further such that the free end portion of the mooring pin 38 extends outward from the main link 26 at a predetermined length.

The link mechanism comprising the main link 26 structured in the above manner and the holding link 34 are interlocked such that when the main link 26 is rotated in a direction of an arrow A in Fig. 3, the mooring pin 38 inserted into the long hole 32 rotates the holding link 34 in a direction of an arrow B in Fig. 3 while sliding within the long hole 32. Since this interlocking motion is limited to a range in which the mooring pin 38 can slide within the long hole 32, the link mechanism comprising the main link 26 and the holding link 34 is structured such as to freely rotate in the direction of the arrow A or the arrow B, or the opposing direction thereof within the range between a state shown in Fig. 3 and a state shown in Fig. 4.

Further, to a portion close to the bent end portion of a linear portion of the main link 26, an end portion of an adjusting lever 40 for setting a position which constitutes a holding means for setting a normal state and a reclining state of the child seat body 10 is axially attached by an axial pin 42.

The adjusting lever 40 is provided with an engaging portion 40A which linearly extends from the end portion axially

attached by the axial pin 42 and a grip portion 40B which serially connected thereto in a bent manner. The engaging portion 40A is provided with a U-shaped engaging groove 44 which can be engaged with and be removed from the mooring pin 38 for setting a normal position disposed at the portion of the long hole 32 as shown in Fig. 3 close to the axial pin 28, and with a U-shaped engaging groove 46 which can be engaged with and be removed from the mooring pin 38 for setting a reclined position disposed at the portion of the long hole 32 as shown in Fig. 4 close to the axial pin 36, thereby constituting a holding means.

Further, it is possible to provide a single or a plurality of U-shaped engaging grooves which can be engaged with and be removed from the mooring pin 38 at desired positions between the engaging groove 44 and the engaging groove 46 in the engaging portion 40A so that the reclining attitude of the child seat 10 can be adjusted at a plurality of steps.

Still further, as shown in Figs. 3 to 7, the grip portion 40B of the adjusting lever 40 is formed such as to be obliquely bent to a front portion of the seated occupant from the engaging portion 40A, to be obliquely bent to a side portion of the seated occupant and to be extended to a direction parallel to that of the engaging portion 40A.

The adjusting lever 40 is structured such as to remove the mooring pin 38 from the engaging groove 44 or 46 by that the operator grips the grip portion 40B and rotates it around the axial pin 42 to a direction of an arrow C in Figs. 3 and

6, and to engage the engaging groove 44 or 46 with the mooring pin 38 by rotating it to a direction of an arrow D in Fig. 7.

The structure of the holding link 34 having the mooring pin 38 inserted into the above long hole 32 and the adjusting lever 40 may be made not only by providing them in the one side portion of the child seat body 10 but also by providing them in both side portions thereof.

Next, a using method and an operation of the vehicle seat with the child seat in accordance with the first embodiment of the present invention as structured above will be explained below.

The child seat body 10 is, as shown in an alternate long and short dash line in Fig. 3, set to a use position in a normal position as shown in a solid line in Fig. 3 in such a manner that in a housed state in which the cushion portion 16 is housed in the seat back 14, the upper cushion portion 16A is pulled out to the direction of the arrow C and bent, and further the lower cushion portion 16B is rotated to the direction of the arrow C.

Next, when the child seat body 10 is moved from the normal position to the reclining position, the operator grips the grip portion 40B of the adjusting lever 40 and rotates it to the direction of the arrow C, so that the engagement between the engaging groove 44 and the mooring pin 38 can be removed.

Next, the cushion portion 16 of the child seat body 10 which is positioned at the normal position is pulled to a direction of an arrow E of Figs. 1, 3 and 6. Then, the main

link 26 is rotated to the direction of the arrow A, the holding link 34 is rotated to the direction of the arrow B while the mooring pin 38 is slidden within the long hole 32 and the main link 26 is moved to the reclining position shown in Figs. 2 and 7. In this state, the adjusting lever 40 is rotated to the direction of the arrow D of Fig. 7 and the engaging groove 46 is engaged with the mooring pin 38, thereby setting the reclining state as shown in Fig. 4. In this state, a child 48 seated on the child seat can take a comfortable attitude as shown in the drawing. When the child is seated on the child seat, it is of course that the seat belt device 20 should be attached to the child.

Next, in the case that the child seat body 10 is returned to the normal position from the reclining position and further returned to the housed position, it can be performed by operations reverse to the above operations.

Next, a second embodiment of the present invention will be explained with reference to Figs. 8 to 10. The second embodiment will show the other structure of the reclining device attached to the child seat body 10. The child seat body 10 is structured such that an end portion of the main link 26 is axially attached to each of the inner corner end portions of the both vertical side members 24A and 24B of the frame body 24 disposed above with facing to Fig. 9. Each of the main link 26 is fixed to both lateral side portions of the back portion 18 and the other end portions of the main link 26 is bent in such a manner as to form a hook, in which a round through hole

50 is formed. Further, the mooring pin 38 is projectingly provided on the side surface of the each main link 26 close to the other end portion and opposing to the frame 24.

Still further, the end portion of the cushion portion 16 is axially supported by an axial pin (not shown) at a predetermined position between the mooring pin 38 and the through hole 50 in the two main links 26.

An end portion of the holding link 34 having a substantially triangular shape is axially attached to each inner corner end portion of the both vertical side members 24A and 24B of the frame 24 disposed below with facing to Fig. 9. The other end portion of the holding link 34 is provided with a projecting portion 52 which projects in a manner of a rectangular projection and the long hole 32 is formed on this projecting portion 52. The mooring pin 38 for the main link 26 is slidably inserted into the long hole 32. The main link 26 and the holding link 34 are interlocked such as to respectively rotated at a desired angle within a range in which the mooring pin 38 can move within the long hole 32 so that the cushion portion 16 and the back portion 18 can be moved between the normal position and the reclining position.

Furthermore, the holding link 34 is provided with a mooring hole 54 which corresponds to communication of the through hole 50 when the main link 26 is in the normal position and with a mooring hole 56 which corresponds to communication of the through hole 50 when the main link 26 is in the reclining position.

As shown in Fig. 9, a holding mechanism 58 which constitutes a holding means for holding the child seat body 10 at the normal position or the reclining position is disposed in the cushion portion 16. The holding mechanism 58 is mounted on a T-shaped bracket 60 which comprises a bracket portion 60A for holding a long plate like lock mechanism and a bracket portion 60B for holding a long plate like operation mechanism integrally extending to a perpendicular direction from the horizontal center of the bracket portion 60A.

The bracket portion 60A is structured such that both ends thereof is bent in such a manner as to perpendicularly stand up, that a round through hole is formed on each of standing portions 60C and that a round rod portion 62A of a lock member 62 is slidably inserted into the through hole. A flange 64 made by forming a rectangular plate such as to have a half circle portion on one half thereof is fixed to the center portion of the round rod portion 62A in such a manner that a linear bottom line of the flange 64 can be slidably guided on a surface of the bracket portion 60A. Further, a compression spring 66 is disposed in a space between each of the standing portions 60C and each of the flanges 64 so that each of the lock members 62 can be urged toward the center of the bracket portion 60. The two lock members 62 are provided with guide members 68 on end portions positioned close to a center of the bracket 60 in such a manner as to oppose to each other. Each of the guide members 68 has a trapezoidal shape and is disposed such that an oblique surface 68A thereof looks to the bracket 60B and is opposed to

each other. Further, these guide members 68 are disposed such that they are pile up to a direction of thickness thereof and that the oblique surfaces 68A piled up in this manner are cross to each other. A side surface opposing to a rear portion of the oblique surface 68A of each of the guide members 68 is formed in parallel to the side line of the bracket 60A and is slidably in contact with a guide plate portion 70 formed such that the rectangular piece can perpendicularly stand up from the center portion of the bracket 60A so that an axial motion of the round rod 62A thereof can be guided.

The bracket portion 60B for holding the operation mechanism is bent in such a manner that a free end thereof perpendicularly stands up, a rectangular through hole is formed on a standing portion 60D thereof and an operation member 72 is slidably inserted into the through hole to be guided in such a manner as not to axially rotate.

An end portion of the operation member 72 extending from the standing portion 60D is formed on a T-shaped handle portion 72A and the other end portion of the operation member 72 is provided with an operation head portion 72B. The operation head portion 72B is made by forking a tip end portion of a right square pillar into two branches and rounded corner portions thereof can be slidably in contact with oblique surfaces 68A of the lock member 62.

A base end portion of the operation head portion 72B is provided with a rectangular plate like flange plate 74 and a compression spring 76 is disposed in an axial portion between

the flange plate 74 and the standing portion 60D. The operation head portion 72B of the operation member 72 is compressingly contacted with the oblique surface 68A of the guide member 68 by the driving force due to the spring 76.

Accordingly, in a normal state, the operation head portion 72B is in a state that the operation head portion moves the lock member 62 to a direction of an arrow G against the driving force due to the spring 66 along the oblique surface 68A by means of the driving force due to the spring 76. Further, in the case that the handle portion 72A is pulled in a direction reverse to an arrow F, each of the lock members 62 is moved to a direction reverse to an arrow G by the driving force due to the spring 66 while the oblique surface 68A is in contact with the operation head portion 72B in a sliding manner so that the lock member 62 is moved such that a length at which the round rod portion 62A projects from the standing portion 60C of the free end is reduced.

The holding mechanism 58 structured in the above manner is housed within the cushion portion 16, the free end portion of each of the round rod portion 62A can be engaged with and removed from the mooring hole 54 or 56 through the through hole 50 of the main link 26, and the handle portion 72A is disposed such as to outwardly expose from a rectangular recess portion 78 of the cushion portion 16.

Next, a use method and an operation of the child seat in accordance with the second embodiment of the present invention structured in the above manner will be explained below. In the

case of adjusting the child seat body 10 between the normal position and the reclining position, at first, the handle portion 72A is pulled to a direction of an arrow H of Fig. 8 and is held. Then, the operation member 72 is moved to the direction reverse to the arrow F in Fig. 9 and the lock member 62 which is interlocked through the operation head portion 72B and the guide member 68 is moved to the direction reverse to the arrow G so as to remove out from the mooring hole 54 or 56. In this state, a relative motion between the main link 26 and the holding link 34 can be performed so that the main link 26 can freely rotate to a direction of an arrow J within a predetermined range and the holding link 34 can freely rotate to a direction of an arrow I within a predetermined range. Accordingly, since the main link 26 and the holding link 34 can be moved between the normal position and the reclining position within a range in which the mooring pin 38 can slide within the long hole 32, the reclining position can be set by pulling the cushion portion 16 to the direction of the arrow H in Fig. 8 and then can be transmitted to the normal position by pushing it to the direction reverse to the arrow H in Fig. 8. After the normal position or the reclining position is selected in the above manner, by doing away with the handle portion 72A, the operation member 72 is moved to the direction of the arrow F by the driving force due to the spring 76, each of the lock members 62 is moved to the direction of the arrow G in an interlocking manner with this motion, each of the round rod portions 62A is inserted into the through hole 50 of the main

link 26 and the mooring hole 54 or 56 of the holding link 34, the relative motion between the main link 26 and the holding link 34 is stopped and the child seat body 10 is set to the normal position or the reclining position.

Further, since the other structures, operations and effects of the second embodiment of the present invention except the above explanation are the same as those of the first embodiment of the present invention, the same reference numerals are attached to the same elements and the detailed explanation thereof is omitted.

Still further, the holding means is not limited to the structures explained in the above first and second embodiments and can be structured in various manners which can relatively fix the main link 26 and the holding link 34 at the normal position and the reclining position. For example, a lock mechanism using a locking mechanism, a gear mechanism and the like can be employed. Further, an interlocking means can be, of course, structured by using various kinds of sliding elements for interlocking the main link 26 and the holding link 34 under a study of mechanism, for example, a guide groove, a slider and the like.

In accordance with the vehicle seat with the child seat of the present invention, the child seat integrally mounted to the vehicle seat can be independently reclined so that an excellent effect providing a comfortable attitude can be obtained.

CLAIMS

1. A vehicle seat with a child seat characterized by comprising:

a back portion axially supported at a position close to a head portion in a seat back portion for the vehicle seat having a seat cushion on which an occupant seats and a seat back serving as a backrest;

a cushion portion axially supported at a position close to the seat cushion in said back portion; and

a holding means for releasably holding the positions of said back portion and said cushion portion between a normal position in which said back portion and said cushion portion are pulled to said seat back side and a reclining position in which said back portion and said cushion portion are pushed out to a direction apart from said seat back.

2. A vehicle seat with a child seat characterized by comprising:

a main link having an end portion which is axially supported to a portion opposing to a seat cushion in a seat back of the vehicle seat;

a back portion fixed to said main link;

a cushion portion axially supported to the other end of said main link;

a holding link having an end portion which is axially supported to said seat back in a seat cushion side;

an interlocking means for interlocking the other end

portion of said main link and the other end portion of said holding link in a sliding manner; and

a holding means for releasably stopping a relative motion between said main link and said holding link when said back portion and said cushion portion are in a normal position or in a reclining position.

3. A vehicle seat with a child seat characterized by comprising:

a main link having an end portion which is axially supported to a portion opposing to a seat cushion in a seat back of the vehicle seat;

a back portion fixed to said main link;

a cushion portion axially supported to the other end of said main link;

a holding link having an end portion which is axially supported to said seat back in a seat cushion side;

a long hole provided on one of the other end portion of said main link and the other end of said holding link and a mooring pin provided on the other thereof in a projecting manner and slidably inserted to said long hole, for interlocking the other end portion of said main link and the other end portion of said holding link in a sliding manner; and

an adjusting lever for removably engaging with said mooring pin when said back portion and said cushion portion are in a normal position or in a reclining position so as to hold the normal position or the reclining position.

4. A vehicle seat with a child seat characterized by

comprising:

a main link having an end portion which is axially supported to a portion opposing to a seat cushion in a seat back of the vehicle seat;

a back portion fixed to said main link;

a cushion portion axially supported to the other end of said main link;

a holding link having an end portion which is axially supported to said seat back in a seat cushion side;

a long hole provided on one of the other end portion of said main link and the other end of said holding link and a mooring pin provided on the other thereof in a projecting manner and slidably inserted to said long hole, for interlocking the other end portion of said main link and the other end portion of said holding link in a sliding manner; and

a holding mechanism having a lock member and an operating member which are structured such that the lock member is simultaneously inserted to a through hole provided on the other end portion of said main link and a mooring hole provided on said holding link communicated thereto when said back portion and said cushion portion are in a normal position and is further simultaneously inserted to a mooring hole separately provided on said holding link communicated with the through hole of said main link when they are in a reclining position, and that the operating member detachably operates the lock member from said mooring hole.

5. A vehicle seat with a child seat as recited in any one

of claims 1 to 4, characterized in that said cushion portion is piled up by folding in a middle portion thereof so as to provide a seat surface having a suitable size for a child.

6. A vehicle seat substantially as described herein with reference to Figures 1-7 of the accompanying drawings.

7. A vehicle seat substantially as described herein with reference to Figures 8 - 10 of the accompanying drawings.

The Patent Office

25

Application No: GB 9718666.2
Claims searched: 1 & 5-7

Examiner: Jeremy Philpott
Date of search: 28 January 1998

Patents Act 1977
Search Report under Section 17

Databases searched:

UK Patent Office collections, including GB, EP, WO & US patent specifications, in:

UK Cl (Ed.P): A4L [LAAR, LBMA, LBMB, LBMF, LBMG, LBPB, LBPC, LBPF, LBRD]

Int Cl (Ed.6): B60N: 2/26, 2/30

Other: Online: WPI

Documents considered to be relevant:

Category	Identity of document and relevant passage		Relevant to claims
Y	US 5468046	(Hoover Universal Inc.) whole document & figures, note part 24 in Fig 2.	5
Y	US 5290090	(Hoover Universal Inc.) whole document & figures, note part 36 in Fig 1.	5
X, Y	CA 2159149 A	(Douglas & Lomason Company) whole document & figures, note Figs 1 & 2. Equivalent to US 5564780.	1 (X) 5 (Y)

X	Document indicating lack of novelty or inventive step	A	Document indicating technological background and/or state of the art.
Y	Document indicating lack of inventive step if combined with one or more other documents of same category.	P	Document published on or after the declared priority date but before the filing date of this invention.
&	Member of the same patent family	E	Patent document published on or after, but with priority date earlier than, the filing date of this application.