Sept. 27, 1960 C. E. MILLER 2,953,990

AMMUNITION

Filed Dec. 11, 1953

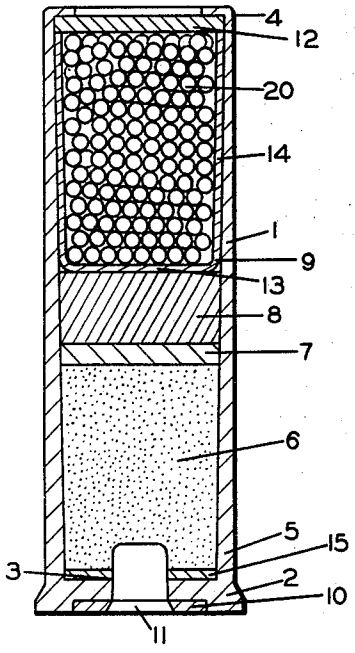

FIG. 1

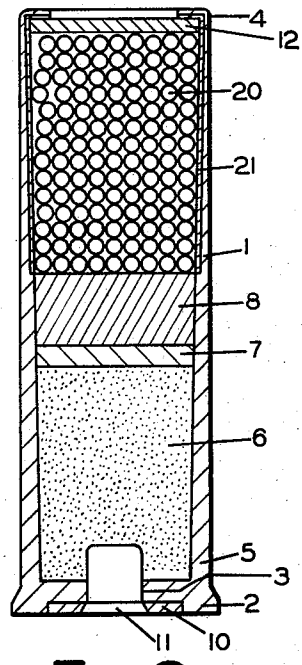

FIG. 2

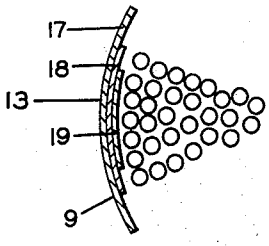

FIG. 3

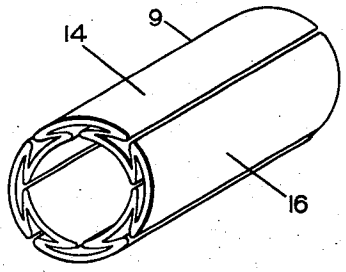

FIG. 4

INVENTOR.
CHARLES E. MILLER

BY Clell W. Upchurch

AGENT

United States Patent Office

2,953,990

Patented Sept. 27, 1960

2,953,990

AMMUNITION

Charles E. Miller, Hamden, Conn., assignor to Olin Mathieson Chemical Corporation, a corporation of Virginia

Filed Dec. 11, 1953, Ser. No. 397,510

3 Claims. (Cl. 102—42)

This invention relates generally to ammunition and more particularly to a novel shotgun cartridge and a case therefor.

Shotgun cartridge cases molded from a resinous material such as ethyl cellulose, cellulose acetate, and the like have been proposed heretofore. Most of these resinous materials are too hard and brittle, however, so it has been proposed to plasticize them in order to provide a more pliable case which will not split or fracture when the cartridge is fired. Although functioning of the breech end of the cartridge is improved in this way, it has been found that the end of the cartridge adjacent the shot column frequently fails to function properly. Consequently, a portion of the plastic case severs and accompanies the shot with a resulting impairment of the shot distribution at the target. Such a disadvantage is apparent to some extent under all temperature conditions but is most evident when the cartridges are fired under warmer weather conditions.

It is therefore an object of this invention to provide a novel shotgun cartridge having a molded resinous cartridge case. Another object of the invention is to provide a cartridge with a molded resinous cartridge case having improved ballistics characteristics. A more specific object of the invention is to provide a shotgun cartridge having a case molded from a resinous material which is sufficiently flexible to not split when the cartridge is fired and is adapted to be fired without the crimped end of the case becoming severed from the remainder thereof.

The foregoing objects as well as others will become apparent from the following description and accompanying drawing in which:

Figure 1 is a longitudinal view in section of one embodiment of the invention;

Figure 2 is a longitudinal view in section of another embodiment of the invention;

Figures 3 and 4 illustrate a preferred shot enclosing tube suitable for the cartridge of Figure 1; Figure 4 showing the tube ready for insertion in the case; Figure 3 showing it after it leaves the gun muzzle.

In accordance with this invention, the foregoing objects as well as others are attained, generally speaking, by providing a partitioning member between the shot and the resinous cartridge case adapted to prevent individual shot from indenting or otherwise deforming the enclosing wall of the cartridge case. The partition, also referred to herein as a liner, must be of such hardness or thickness or both that any indentation formed therein by the shot will not extend therethrough and form a protuberance on the other side which extends into the wall of the cartridge case. The partition may be positioned in the case during molding and may thus become an integral part thereof or it may be inserted in the cartridge after the case has been formed. The partition may be formed from any material which will absorb any distortion caused by the shot and prevent it from extending therethrough into the sidewall of the cartridge case. Metal

or plastics which are sufficiently rigid or thick, for example, are suitable but paper is preferred.

The plastic cartridge case of this invention may be molded or otherwise formed from any resin having characteristics such that the case will not fracture or split at the breech end thereof when the cartridge is fired. Polyethylene, a solid polymer of ethylene such as is disclosed in U.S. Patent 2,153,553, has been found admirably suitable for the purpose but other resins such as, for example, suitably plasticized ethyl cellulose, cellulose acetate and the like may be utilized, if desired.

In a preferred embodiment of the invention, the shot is enclosed within a tube or cylinder formed from paper or any other suitable solid non-resinous material and not forming part of the cartridge case. This tube has a closed end adjacent the filler wads in the cartridge and is preferably formed by plaiting a circular disk of paper. The strength of the tube is enhanced if the disk is formed from a plurality of plies of paper to reinforce the closed end thereof. Ordinary unbleached kraft paper is particularly advantageous for the purpose and the surface thereof which lies adjacent the cartridge case may be advantageously coated with a lubricating material such as paraffin, microcrystalline petroleum wax, ceresin, Ozokerite or the like. If the tube or partitioning member is an integral part of the cartridge case, its inner surface must be flush with the inner wall of the remainder of the case in order that it will not impede the flight of the filler wads from the case. If the partitioning member is open at both ends, it may extend beyond the shot into the area adjacent the filler wads or it may extend the entire length of the cartridge, if desired.

Best results are obtained with polyethylene shotgun cartridge cases molded from polyethylene having a tensile strength of about 900 to about 3,000 pounds per square inch. The shotgun cartridge case may be molded from a molding composition consisting essentially of the pliable plastic or it may be molded from the plastic mixed with a filler material such as, for example, calcium carbonate, clay, silica, Fiberglas, carbon black or the like. Ordinarily, the rigidity of the cartidge case is improved by the inclusion of one of the aforesaid filler materials, preferably in amounts of not more than about forty percent of the composition. The invention contemplates coloring the plastic or resinous cartridge case with a suitable dye, if desired. Conventional injection molding processes have been suitable for forming the case but any other suitable forming method can be utilized. The granulation of the filler material should preferably be such that substantially all particles thereof will pass through a 100 mesh screen and remain on a 325 mesh standard Tyler screen. That is, preferably, the particles of filler should be from about 44 to about 150 microns.

In order further to clarify the invention, the following is a detail description with reference to the accompanying drawing:

A shotgun cartridge case 1 (Figure 1) having a head 2 with a cavity 3 therein is molded in a suitable die from a mixture of about 20 parts calcium carbonate filler and about 80 parts polyethylene by a conventional injection molding process. The molding temperature is about 450° F. and the injection pressure is about 10,000 pounds per square inch. The average granulation of the filler is about 0.002 inch and the polymer of ethylene has an average molecular weight of about 21,000, a softening temperature of about 110° C., a viscosity at 130° C. of about 1×10^6 poises, a tensile strength of about 1800 pounds per square inch, an elongation of about 550 percent, a yield strength of about 1475 pounds per square inch and a 50 percent brittleness temperature of about −75° C. In preparing the molding composition for the molding operation, the powdered polyethylene is agitated

with the calcium carbonate in a Banbury mixer having two rotors running in opposite directions at different speeds until they are thoroughly intermixed or for about two hours. Prior to charging the die with the molding composition, a brass washer **10** is located in the die around the pin used to form cavity **3** and the plastic mass is charged about this washer **10** into the die.

The wall thickness of tube **1** is tapered from the mouth **4** of the tube **1** to a greater thickness at **5** near the head of the tube, as shown in Figure 1. After the resulting cartridge case has cooled, a conventional shotgun cartridge primer assembly **11** is pressed into cavity **3** whereupon it becomes frictionally engaged thereby. Suitable changes of wad **15**, propellant **6** and wads **7** and **8** are inserted in the case. A paper tube **9**, illustrated in Figure 1, is next inserted over wads **7** and **8** with the base **13** contiguous thereto and with the skirt **14** extending from the base **13** upward and contiguous with the inner wall of case **1** as shown in Figure 1. Shot **20** are then placed in the tube **9**, cardboard wad **12** is inserted into open end **4** which is subsequently turned over the wad **12** to form an end closure for case **1**. The bending or crimping of the end of case **1** over wad **12** is conducted about 75° C.

Tube **9** is shaped prior to its insertion in the cartridge case by a series of steps which involve cutting a disk having a diameter equal to the sum of the internal diameter of case **1** and the length of the case wall extending from the exposed surface of wad **8** to the unexposed surface of wad **12** contiguous with the shot. The cut disk is then placed on a suitable die and, by means of a punch, the disk is forced through the die forming a tube having plaits **16** in the sidewall, as illustrated in Figure 4. Alternately, three disks of different diameters may be utilized to form the tube similar to that shown in cross-section in Figure 3. The three disks are placed one on the other with the larger disk **17** adjacent the die, smallest disk **19** adjacent the punch and disk **18** therebetween so that the larger disk **17** forms the exterior surface of the tube **9** and disk **19** forms the inner surface of the closed end of tube **9**. Ordinarily, no adhesive is required to fasten the disks together, but any suitable adhesive can be utilized, if required.

The cartridge illustrated in Figure 2 is molded from a polyethylene composition similar to that described in the foregoing embodiment but it is provided with a tubular paper liner **21** having an open end adjacent wad **8**. As illustrated in the drawing the liner **21** may be positioned in the cartridge case during molding or while the resinous material is softened in order that it will be partially embedded within the cartridge case wall. In another embodiment, the liner **21** having two open ends may be inserted after the cartridge case has been molded and does not necessarily have to be embedded in the wall of the cartridge case or be integral therewith but can fit loosely within the cartridge case in a manner similar to that of the wad enclosing member **14** of Figure 1.

While in the foregoing embodiments a filler material is utilized to effect particular characteristics, as indicated hereinbefore, polyethylene and similarly inherently flexible resins may be utilized to advantage without a filler to make a suitable shotgun cartridge case which does not split longitudinally either at normal temperatures or at the coldest temperatures to which they ordinarily become exposed. The purpose of the filler materials in the quantities specified hereinbefore is to impart greater rigidity to the cartridge case and it has been found that the primer of a shotgun cartridge formed from a polyethylene composition which contains a filler material is sometimes more easily initiated than a cartridge case of polyethylene alone. Filler materials in the specified quantities can be added to improve the rigidity and extraction characteristics of the fired cartridge without seriously effecting the pliancy or without causing splitting of the cartridge case. Shotgun cartridge cases formed from polyethylene having a tensile strength above about 3000 lbs. per sq. inch are usually too hard and brittle for most purposes while those having a tensile strength below about 900 lbs. per square inch are too soft for the purpose. Polyethylenes having a molecular weight of about 12,000 to about 40,000 have been found to have the desired tensile strength as well as other properties.

Any suitable mixer such as a Banbury type mixer or a Sigma Blade mixer can be used for mixing the resinous composition. Fibers as long as 0.125 inch or more of some fillers such as fiberglass, for example, may be added to the resin and the dimensions thereof may be reduced to the desired granulation during the mixing operation, particularly if a Banbury mixer is utilized.

If the relative dimensions of the primer assembly **11** and cavity **3** are such that the primer assembly **11** will not be frictionally engaged and retained within cavity **3**, the primer assembly **11** can be bound therein with a suitable adhesive such as Paisley Polyethylene Adhesive #7245–P. Although a metallic insert similar to washer **10** further improves the rigidity of the cartridge case head, it is not essential in all polyethylene or other resinous cartridges but is preferred, particularly if there is any likelihood that the cartridge will be used in a gun having a worn or otherwise weakened firing pin assembly which delivers a lighter blow than the firing pin of a gun in good repair. Rigid materials other than brass such as steel and the like are also suitable for the purpose. The washer **10** or reinforcing ring may or may not be completely enclosed in the polyethylene of the head of the cartridge case.

Although wad **15** is advantageous because it strengthens the head structure of the cartridge case, it is not absolutely necessary and can be omitted, as in Figure 2, particularly if the head **2** is relatively thick. It has been found, however, that greater strength is obtained if a cardboard wad insert is utilized in conjunction with the molded head than is obtained with a plastic head alone having a thickness equivalent to that of the plastic head plus the thickness of the wad. Seldom will the combination of wad **15** with reinforcing ring **10** be required and either one or both can frequently be omitted.

It is often found in forming a plaited tube, such as at **14** in tube **9** of Figure 4, that it is impossible to compensate for all of the surplus paper at the open end of the wad by plaiting. In such instances, the paper disks may be cut longitudinally to remove the surplusage. In fact, the disks may be split at intervals around the circumference thereof and a tube then formed by overlapping the resulting adjacent edges of paper.

As indicated in the foregoing, the cartridge case provided by this invention not only enables the manufacture of a cartridge that can be fired at colder winter temperatures without hazardous splitting of the case but also provides a cartridge case in which the crimped end thereof will open up at the time of firing and permit the shot charge to escape from the case without severing any part of the case from the remainder thereof. The partitioning member provided by this invention in the form of the tubular member having two open ends and integral with the case or in the form of a tube fitting within the case but not an integral part thereof does not interfere with the flight of the projectiles because the integral tube is not propelled from the cartridge case and the plaited partitioning member, because of the resistance of the air, falls behind the shot column immediately after it emerges from the muzzle of the gun. Either type prevents severance of the cartridge case when the cartridge is fired. The plaited structure of the preferred type of partitioning member is particularly advantageous because the resistance of the air causes it to become unplaited and assume the position shown in Figure 3. By shaping the partitioning member from a plurality of disks of paper, the increased thickness of the base insures that the tube will not become ruptured when it is inserted in the cartridge

case or while it is being propelled therefrom. The increased weight of the base of this type partitioning member is also a contributing factor to the ease with which the tube unfolds after leaving the muzzle of the gun.

While embodiments of the invention have been described in detail in the foregoing, these embodiments are described merely for the purpose of illustration, and modifications within the skill of the art may be made therein without departing from the spirit and scope of the invention except as limited by the appended claims.

Having described the invention what is claimed and desired to be secured by Letters Patent is:

1. A plastic shot shell to be fired in the chamber of a shot gun and providing an improved shot pattern, said shell comprising a cartridge case having head and mouth ends, a cup-shaped cavity in said case, said cavity having side wall means extending between the head and mouth ends of said case, a load of shot pellets within said cavity to be discharged through said mouth end of said cartridge case during firing of the shell, said cartridge case being a molded plastic resin material having physical properties equivalent to polyethylene plastic material of a molecular weight between about 12,000 to 40,000 such that the breech end of said case will withstand normal tendencies to split or fragment when said shell is fired in said shot gun chamber and being sufficiently soft to be deeply indented in the side wall means at the mouth end of said case by said shot pellets upon firing of the shell, a closure for the mouth end of said cartridge case to retain said shot pellets therein until said shell is fired, and means to prevent indentation by said shot pellets of the side wall of said plastic cavity adjacent said shot pellets after the cartridge is fired, the last said means comprising a cup slidably received in said cavity and having side walls between said shot pellets and the side wall means of said cavity to prevent portions of the mouth end of said cartridge case through which said shot is discharged from being severed and traveling with said shot, said cup containing said shot pellets and being adapted to be discharged from said socket with said shot pellets, thereby providing a plastic shot shell having an improved shot pattern.

2. The plastic shot shell of claim 1 wherein a lubricant is provided between said side wall means and said cup.

3. The plastic shot shell of claim 1 wherein said cup has plaited side walls adapted to open when said shell is fired to expedite said cup falling behind said shot pellets.

References Cited in the file of this patent

UNITED STATES PATENTS

1,902,695	Edwards	Mar. 21, 1933
2,137,350	Roberts	Nov. 22, 1938

FOREIGN PATENTS

394,037	Great Britain	June 22, 1933
979,550	France	Dec. 13, 1950

OTHER REFERENCES

Article entitled, "Properties of Polyethylene Suggest Peacetime Applications," published in Product Engineering Magazine of March 1944, pages 202 and 203.