Feb. 9, 1926.

1,572,075

W. G. PAINTER

SYRINGE ASPIRATOR

Filed May 10, 1924

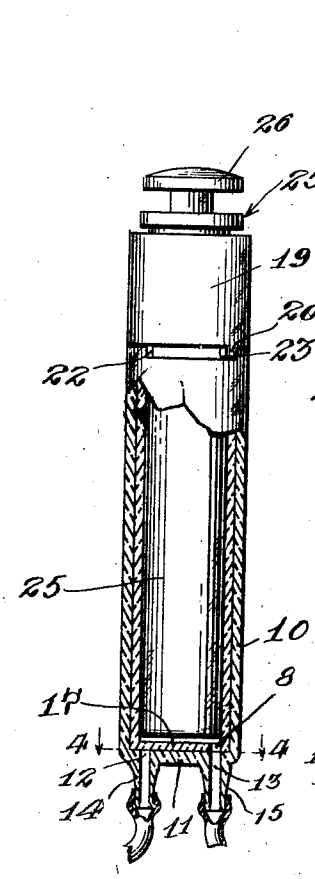


Fig. 1.

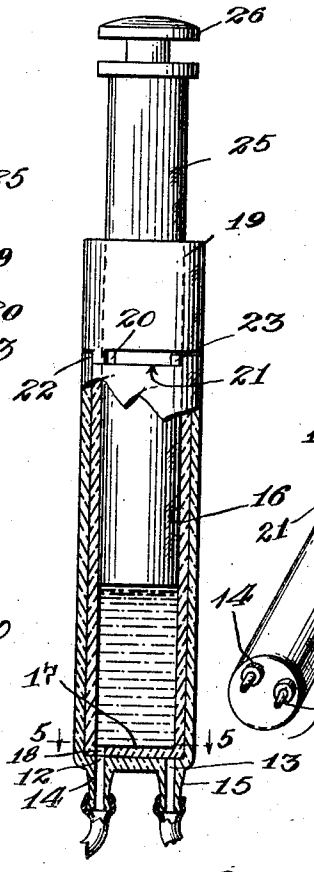


Fig. 2.

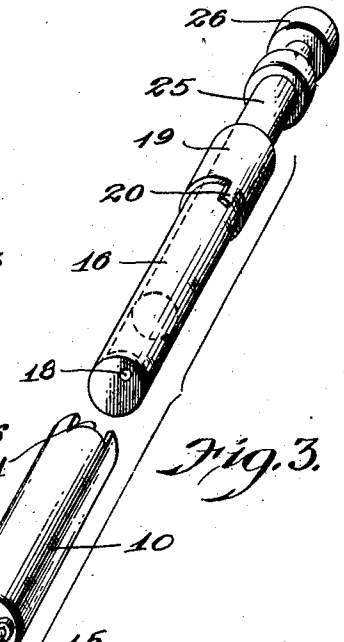


Fig. 3.

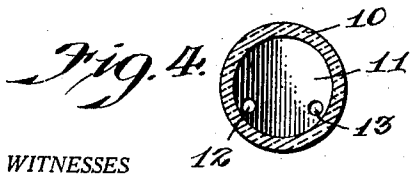


Fig. 4.

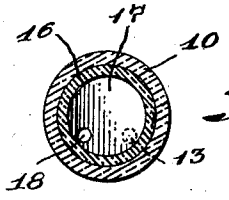


Fig. 5.

WITNESSES

Chr. Nielsen,

INVENTOR

William G. Painter,

BY Munn & Co.

ATTORNEYS

Patented Feb. 9, 1926. 1,572,075

# UNITED STATES PATENT OFFICE.

WILLIAM GRAHAM PAINTER, OF BIG STONE GAP, VIRGINIA, ASSIGNOR OF ONE-HALF TO FRANK H. NICKELS, OF BIG STONE GAP, VIRGINIA.

## SYRINGE ASPIRATOR.

Application filed May 10, 1924. Serial No. 712,396.

*To all whom it may concern:*

Be it known that I, WILLIAM G. PAINTER, a citizen of the United States, and a resident of Big Stone Gap, in the county of Wise and State of Virginia, have invented certain new and useful Improvements in Syringe Aspirators, of which the following is a specification.

This invention relates to a syringe aspirator, and the object of the invention is to provide an instrument of this character which makes possible the aspiration of fluids from, and the injection of medicated fluids or other fluids into the veins, arteries or other cavities of the human body without the necessity of employing the cumbersome apparatus ordinarily employed, without the loss of time usually experienced, and without necessitating the removal of the needle from the patient or subject or from the instrument until the operation has been completed.

A further object is to provide an instrument of this character and having these advantages and capacities and which is of simple and durable construction, reliable in operation and easy and comparatively inexpensive to manufacture and which requires but few and simple manipulations in carrying out its manifold purposes.

Other objects and advantages of the invention reside in certain novel features of the construction, combination and arrangement of parts which will be hereinafter more fully described and particularly pointed out in the appended claims, reference being had to the accompanying drawing forming part of this specification, and in which:

Figure 1 is a view partly in side elevation and partly in longitudinal central section, showing one embodiment of the invention with its parts in one position;

Figure 2 is a view similar to Figure 1 but showing a different position of the parts;

Figure 3 is a group in perspective, illustrating the several parts of the instrument;

Figure 4 is a view in section on line 4—4 of Figure 1; and

Figure 5 is a similar view on line 5—5 of Figure 2.

Referring to the drawings, the numeral 10 designates an outer barrel of cylindrical form having its forward end closed by an integral end plate 11 and having its rearward end open. In the end plate 11 a plurality of ports, designated at 12 and 13 are provided and these ports are arranged at spaced angular intervals around the periphery of the end plate 11. Each of the ports 12 and 13 are designed to serve as intake and discharge ports as will presently appear. Nipples 14 and 15 surround the ports 12 and 13 and provide means whereby rubber tubing or needles or canula may be connected to the outer barrel.

An inner barrel 16 of cylindrical form is rotatably fitted within the outer barrel 10. Preferably the inner periphery of the outer barrel 10 and the outer periphery of the inner barrel 16 are formed to provide a ground and fluid tight joint to prevent the fluid from escaping from between the barrels and to prevent the ingress of fluid or air between the barrels. The inner end of the inner barrel 16 is formed with an integral end plate 17 having a single port 18 formed therein. The port 18 is adapted to be selectively registered with the ports 12 and 13 when the barrel 16 is shifted or rotated relative to the barrel 10.

In order to insure registration of the port 18 with either the port 12 or the port 13 in the extreme position of the barrel 16 with respect to the barrel 10, a collar 19 is fixed to the portion of the barrel 16 which projects from the barrel 10 when the barrel 16 has been inserted as far as it may be in the barrel 10. This collar 19 has integrally formed therewith a stop lug 20 which operates in an arcuate slot 21 provided in the rearward end of the barrel 10. When the lug 20 engages the end wall 22 of the slot 21, the port 18 is in registry with the port 12, as shown in Figure 2 whereas when the lug 20 is engaged with the end wall 23 of the slot 21 the port 18 is in registry with the port 13, as shown in Figure 1.

A piston 25 is slidably fitted in the inner barrel 16 and has a ground joint therewith so that escape of the fluid past the piston or escape of the air past the piston is prevented. At its outer end the piston is formed with a finger piece or operating member 26.

It is to be noted that the ground joints provided between the relatively movable parts of the instrument are intended to be such that any fluid that passes into the interstices between the parts will be so wide-

ly distributed and will encounter such great resistance as to prevent leakage under the pressures encountered.

With this arrangement a needle or canula may be connected up to the nipple 14 and if the device is to be used as an aspirator the barrel 16 is rotated to bring the port 18 into registry with the port 12 with the piston 25 fully inserted in the barrel 16. Then when the piston is withdrawn fluid will be aspirated from the patient or subject to fill the barrel 16. When the barrel 16 has been filled it is shifted or rotated to bring its port 18 into registry with the port 13 whereupon the piston 25 is pushed into the barrel 16 to discharge the fluid through the port 13. When the barrel 16 has been again shifted to bring its port 18 into registry with the port 12 a second aspirating action may be had. This operation may be repeated as often as may be necessary without removing the needle from the body of the patient or subject and without removing the needle from the instrument.

When the fluid is to be injected into the patient or subject the nipple 15 has its hose immersed in the fluid and the nipple 14 is connected to the needle as before. By first bringing the port 18 into registry with the port 13 and withdrawing the piston 25 the barrel 16 may be filled with the medicated fluid, and by shifting the barrel 16 to bring its port 18 into registry with the port 12 and by then pushing the piston 25 inwardly, the fluid may be injected into the patient or subject. As in the case of the aspiration operation, the injection may be repeated as often as may be necessary without removing the needle from the patient or from the instrument. In fact these two operations may be made to follow each other without removing the needle from the patient or from the instrument. Moreover, the parts may be easily and quickly manipulated and may be readily taken apart for cleaning and sterilization.

It is to be understood that the ports 12 and 13, and 18 may be formed in the peripheral walls of the barrels 10 and 16, respectively instead of in the end plates thereof.

I claim:

1. A syringe-aspirator comprising an outer cylindrical barrel having a plurality of ports adapted to be utilized as inlet and outlet ports, an inner cylindrical barrel rotatably and longitudinally shiftable in the outer barrel and adapted to be freely withdrawn from the outer barrel, said inner barrel having a single port selectively registrable with the ports of the outer barrel, there being a ground joint between the cylindrical inner barrel and the cylindrical outer barrel, and a piston fitted in the inner barrel.

2. A syringe-aspirator comprising an outer barrel having a plurality of single ports adapted to be utilized as inlet and outlet ports, an inner barrel shiftably fitted in the outer barrel and having a port selectively registrable with the ports of the outer barrel, there being a ground joint between the barrels, and a piston fitted in the inner barrel, there being a ground joint between the piston and the inner barrel.

3. A syringe-aspirator comprising an outer barrel having an end plate closing its forward end, said end plate having a plurality of angularly spaced ports, an inner barrel rotatably fitted in the outer barrel and having an end plate closing its forward end and provided with a port selectively registrable with the ports of the end plate of the outer barrel, the rearward end of the outer barrel having an arcuate slot, a sleeve fixed to the portion of the inner barrel which projects from the outer barrel, said sleeve having a lug operating in the slot and limiting the rotative movement of the inner barrel to the positions in which its port registers with the ports of the outer barrel, and a piston fitted in the inner barrel.

WILLIAM GRAHAM PAINTER.