A. C. WOOD.

LIGHT PROJECTION REGULATING MEANS.

APPLICATION FILED JAN. 7, 1921.

1,427,251. Patented Aug. 29, 1922.

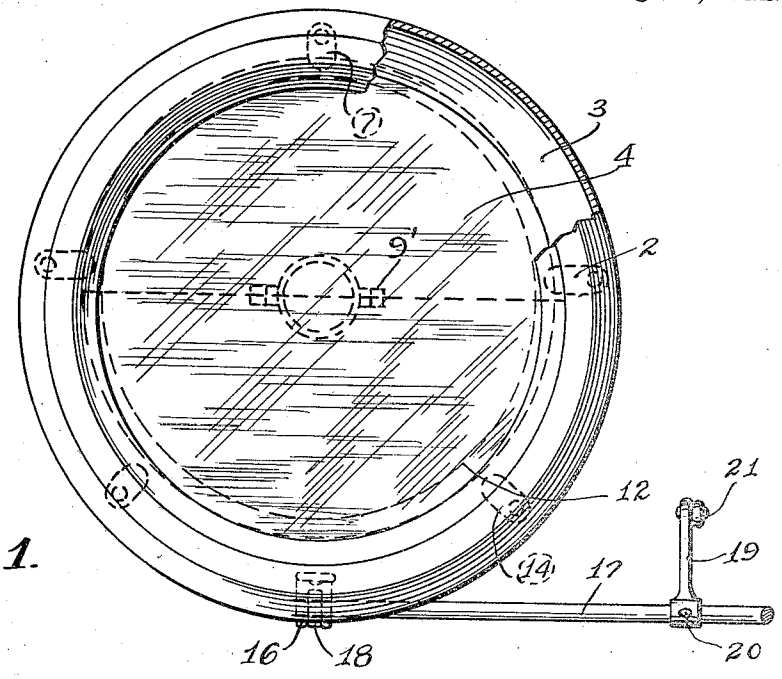

Fig. 1.

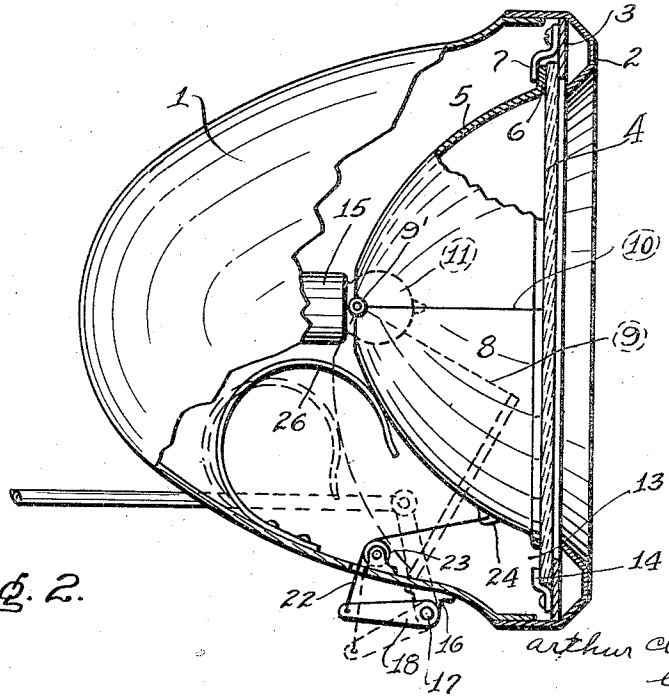

Fig. 2.

Inventor

Arthur Charles Wood

by

John N. Cox

his Attorney

By

UNITED STATES PATENT OFFICE.

ARTHUR CHARLES WOOD, OF MANSFIELD, OHIO, ASSIGNOR, BY MESNE ASSIGNMENTS, TO THE MANSFIELD LAMP AND MANUFACTURING COMPANY.

LIGHT-PROJECTION REGULATING MEANS.

1,427,251. Specification of Letters Patent. **Patented Aug. 29, 1922.**

Application filed January 7, 1921. Serial No. 435,719.

To all whom it may concern:

Be it known that I, ARTHUR CHARLES WOOD, a subject of Great Britain, residing at Mansfield, in the county of Richland and State of Ohio, have invented certain new and useful Improvements in Light-Projection Regulating Means, of which the following is a specification.

This invention relates to a reflector for changing the direction of the projection of reflected rays of light and is especially adapted for use on motor car lamps.

It is well known to drivers or motor cars or the like in the use of the conventional type of lamps especially lamps equipped with a parabolic type of reflector, that the rays of light emitting from the light source and reflected from the reflector are issued therefrom shooting forward in all directions, thereby projecting the rays of light into the vision of the driver of an approaching car dazzling, bewildering and blinding the vision of the driver of the approaching car on account of the glaring effect of the lamps, in the event that the driver of the oncoming car fails or neglects to dim the lamps or to control the direction of the projection of the reflected rays of light from the reflector.

It is further well known that when the driver of the oncoming car dims his lamps or otherwise controls same for the protection of the driver of the approaching car that more or less of the illumination of the lamps of the approaching car is affected thereby making it more difficult to see and guide the course of travel of his car on the road so as to prevent collision beween the motor cars and probable resultant injury to the cars and occupants.

In the conventional type of reflector especially the parabolic type or the like, the light source causes reflected rays of light to emit and diffuse from the reflector radially in front of the car. The light rays emitted from the upper portion of the reflector commencing at the longitudinal axis thereof are directed to shoot in a downward direction toward and on the road, whereas, the light rays projected from the part of the reflector located below the horizontal axis of the plane of the light source are directed to shoot in an upper or angularly related direction shooting into the eyes of the driver of a motor car approaching in an opposite direction and blinding the vision of the driver.

One of the objects of the present invention is to provide a reflector that will constantly direct the reflected rays of light emitting from the part of the reflector located above the horizontal axis of the light source on the road in front of the car and to provide means for changing the position of the lower part of the reflector relative to horizontal axis of the complete reflector and light source, so as to change the direction of the projection of the light rays from the part of the reflector that is located on a plane or below the horizontal axis of the light source and complete reflector, thereby retaining the full and complete illumination of the upper part of the lamp reflector on the road at the same time directing the rays of light projected from the lower part of the reflector outside the direct range of vision of the driver of the oncoming car.

The preferable and conventional specific means for carrying out the objects of the invention is to provide a reflector (preferably a parabolic type) which is constructed in two parts by hinging one part of the reflector to a stationary upper part of a reflector to permit the hinged part to swing downwardly from its normal position to a position below the horizontal axis of the complete reflector formed by the two parts, in combination with means for automatically actuating the lower part of the reflector to return to its normal position, after an oncoming car has been safely passed on the road.

These and other objects are attained by the mechanism illustrated in the accompanying drawings in which:—

Fig. 1, is a front elevation of a conventional type of a parabolic reflector having the invention applied thereto, showing the lower part of the reflector in normal position, and the operating rod for actuating the lower part of the reflector.

Fig. 2, is a side elevation of Fig. 1, partly in section, showing the lower part of the reflector in normal position in full lines, and the position to change the direction of the projection of the rays emitting from the lower part of the reflector in dotted lines.

It will of course be understood that a pair of lamps are used in the ordinary equipment

of a motor car but as the invention applied to each lamp is exactly of the same construction, one lamp is shown, with a part of the intermediate connecting mechanism for operating the swinging lower part of the reflector. The lower part of the reflector of the lamps can be operated simultaneously or independently of each other if desired.

In the drawings reference numeral 1 represents a casing, 2 a beaded annular front portion which is attached to the casing by any well known fastening means. Reference numeral 3 represents a ring plate which is fastened to the beaded portion of the casing in any well known manner.

A transparent cover plate 4 is provided and adapted to over-lap the ring plate 3. The stationary part 5 of the reflector is provided with an annular flange portion 6 and it is held in place and in contact with the transparent cover plate 4 by clamps 7 which are arranged and fastened to the ring plate 3 at pre-determined points as found most convenient and practical for the purpose intended.

The lower part 8 of the reflector is pivoted upon a pin 9′ and is adapted to be swung downwardly, when operated from the median line, indicated at 9. The normal position of the top of the lower part of the reflector is indicated by reference numeral 10, in which position it abuts against the lower portion of the upper part of the reflector, or in other words on a plane with the longitudinal axis of the light source 11, thereby dividing the two parts of the complete reflector at the longitudinal center or axis of the light source. The swinging part 8 of the reflector is made of less diameter or cut away as indicated at 12 to provide a clearance space 13 over the clamps 14. The light source used in the instant case, (preferably a conventional electric globe) is secured to a socket 15. An electric current is conducted to the light globe in a conventional manner.

A bifurcated bearing bracket 16 is securely attached to each lamp to provide journals for a rotatable rod 17. Between the bifurcated portions of the brackets, levers 18 are fitted and adapted to be operated by a crank 19 which is rigidly secured to the rotatable rod 17 by a pin 20. The crank 19 is arranged and mounted upon said rotatable shaft at any angle with respect to the cranks 18 as will be found most convenient and practical for operating or imparting a rotatable movement to the shaft. A link 21 is attached to the free end of the crank 19 and is secured to the dash board of the car or the like at a point most convenient for the driver of the motor car, to operate it expeditiously and with facility. A cable 22 is attached to the free end of the crank 18 at one end passing and traveling over a sheave pulley 23 and its opposite end is attached to an ear 24 provided on the lower part of the reflector.

In the operation of the mechanism a pull or pressure is exerted upon the link 21 which in turn, through the mechanism described rotates the shaft 17 causing the lever 18 to assume substantially the dotted line position indicated at 9, thereby changing the direction of the projection of the reflected rays of light from the lower part 8 of the reflector, so as to prevent said rays from projecting at or above horizontal axis of the light source and from shooting upward or at an angle into the eyes or range of vision of the driver of the oncoming car with glaring and blinding effect.

When the link 21 is released, the spring 26 which has been forced under tension to the dotted line position shown in Fig. 2, exerts its pressure in an upward direction automatically forcing the lower part of the reflector to contact with the upper part of the reflector on a line with the horizontal axis of the light source and yieldingly maintaining said lower part in normal position completing the reflector as shown in full lines in Fig. 2, as indicated by reference numeral 10. When the oncoming car has passed the driver of the approaching car the link 21 released by the driver of the car equipped with the invention, and the lower part of the reflector is permitted to automatically return to its normal position again completing the conventional form of reflector.

It will be observed that in the application of the present invention to motor car lamps that the same complete and full illumination on the road is had that is now obtained in the use of the ordinary or conventional type of lamp; that means are also provided to prevent the dazzling, bewildering, blinding and glaring effect of the rays of light from the lamp which ordinarily blinds and obliterates the vision of the driver of motor car approaching in an opposite direction.

Claims:

1. In a lamp for motor cars, a parabolic casing, a ring surrounding said parabolic casing and secured thereto, a reflector divided at its horizontal axis having its upper portion fixedly secured to the ring and having its lower portion hingedly connected to the rear end of the upper portion at its horizontal axis, and adapted to be tilted rearwardly from its normal position, yielding means secured to the casing and adapted to press against the hinged portion of the reflector maintaining it in normal position to form a complete reflector, as and for the purpose described.

2. In a lamp for motor cars, a parabolic casing, a ring surrounding said parabolic casing and secured thereto, a reflector di-

vided at its horizontal axis having its upper portion fixedly secured to the ring and having its lower portion hingedly connected to the rear end of the upper portion at its horizontal axis, and adapted to be tilted rearwardly from its normal position, yielding means secured to the casing and adapted to press against the hinged portion of the reflector maintaining it in its normal position to form a complete reflector, a lever operated means connected to the tilted portion of the reflector and also connected to an operating means, said operating means being adapted to operate a plurality of reflectors to tilt same simultaneously, as described.

3. In a lamp for motor cars comprising a parabolic casing having a ring secured thereto, a reflector composed of two parts divided at its horizontal axis one of which is fixedly secured to the casing and the other being hingedly connected at the rear end to the fixed portion and adapted to be tilted rearwardly at the will of the operator, means to yieldingly maintain the tilted portion in juxtaposition to the fixed portion and means to counteract the yielding means to permit of tilting the hinged portion rearwardly which means is adapted by duplication to operate a plurality of reflectors of type described simultaneously.

In testimony whereof I, affix my signature.

ARTHUR CHARLES WOOD.