H. P. CLAUSEN.

TELEPHONE EXCHANGE SYSTEM.

APPLICATION FILED JULY 9, 1917.

1,337,197.

Patented Apr. 20, 1920.

2 SHEETS—SHEET 1.

Fig. 1.

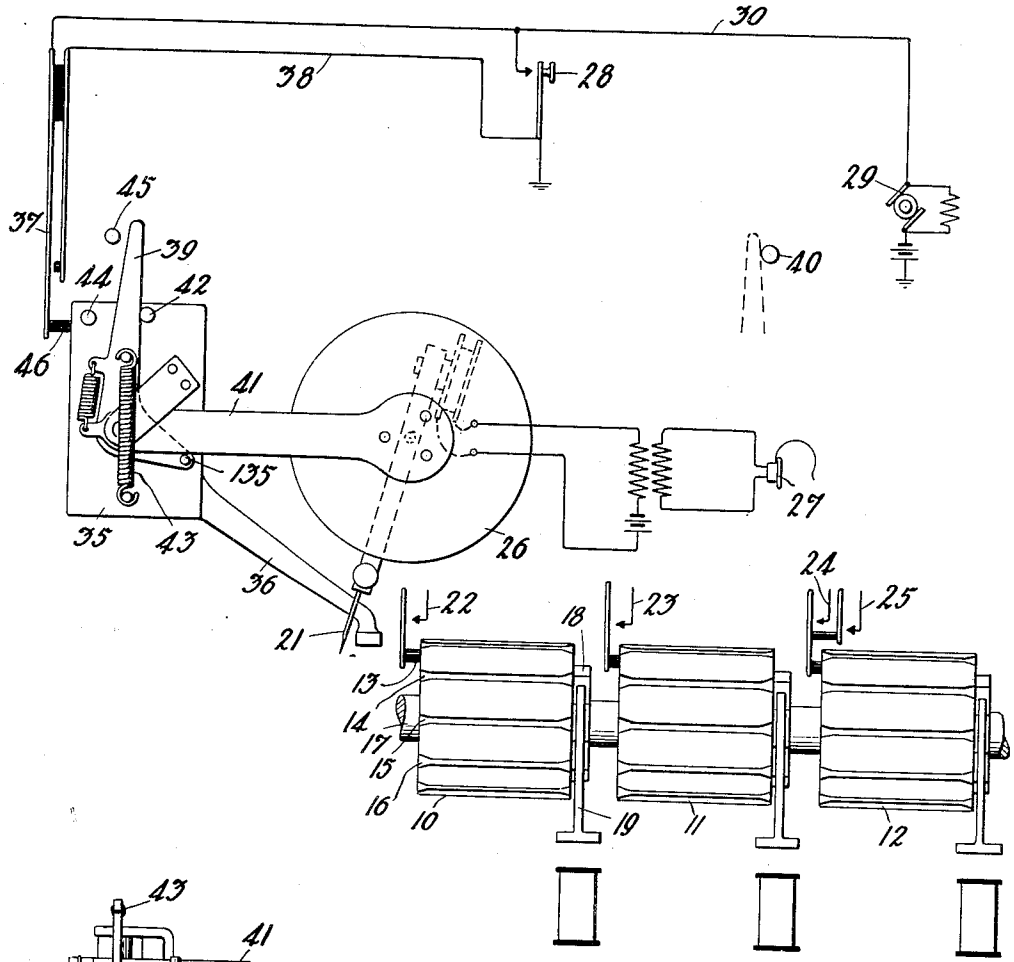

Fig. 2.

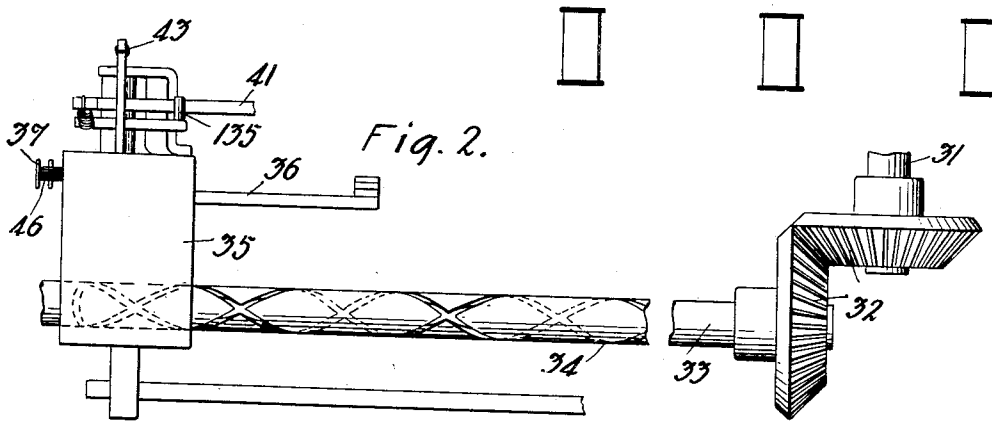

Inventor:
Henry P. Clausen.

by J. G. Roberts
Att'y.

H. P. CLAUSEN.

TELEPHONE EXCHANGE SYSTEM.

APPLICATION FILED JULY 9, 1917.

1,337,197.

Patented Apr. 20, 1920.

2 SHEETS—SHEET 2.

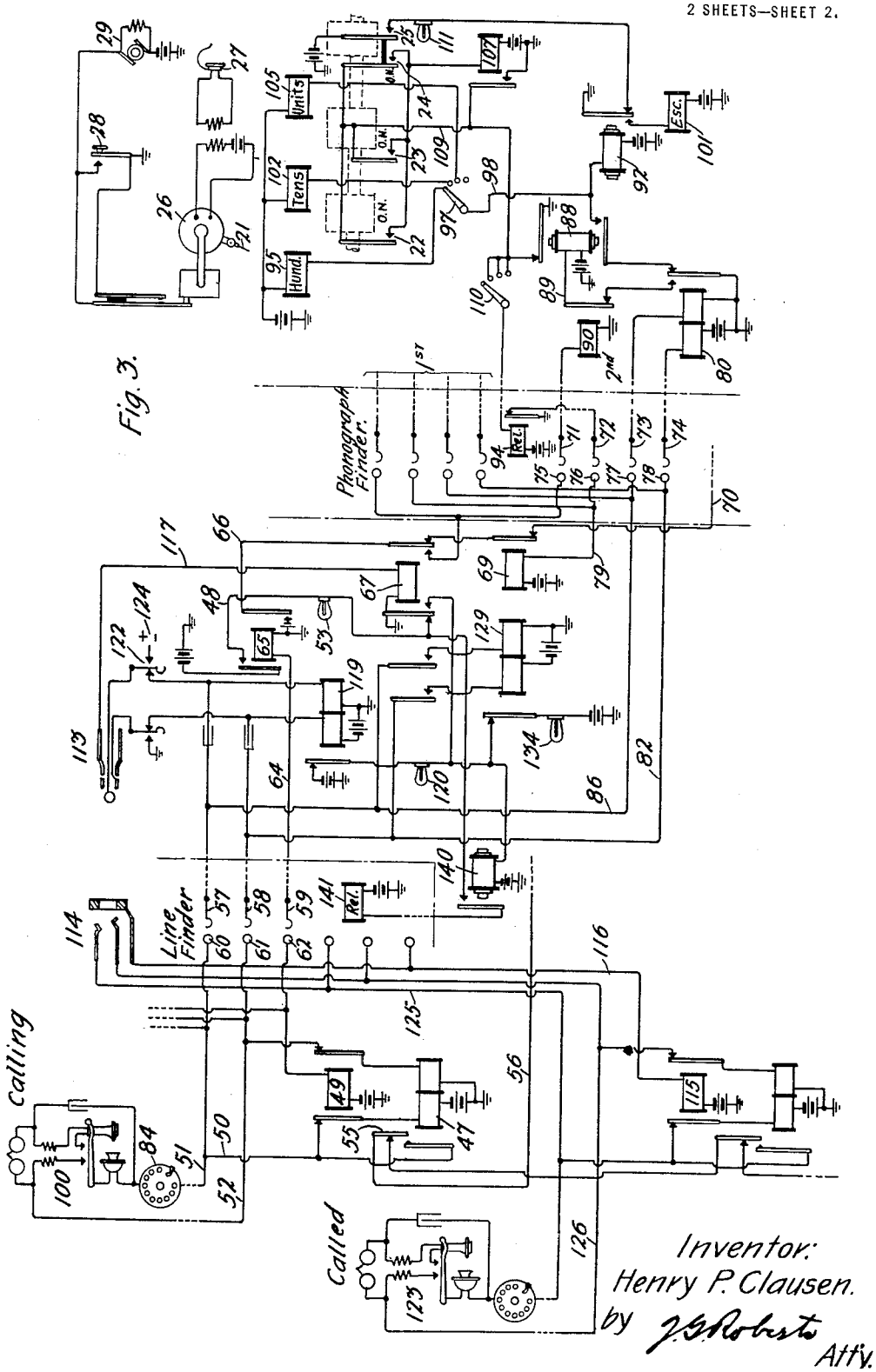

Fig. 3.

UNITED STATES PATENT OFFICE.

HENRY P. CLAUSEN, OF MOUNT VERNON, NEW YORK, ASSIGNOR TO WESTERN ELECTRIC COMPANY, INCORPORATED, OF NEW YORK, N. Y., A CORPORATION OF NEW YORK.

TELEPHONE-EXCHANGE SYSTEM.

1,337,197. Specification of Letters Patent. **Patented Apr. 20, 1920.**

Application filed July 9, 1917. Serial No. 179,548.

To all whom it may concern:

Be it known that I, HENRY P. CLAUSEN, a citizen of the United States, residing at Mount Vernon, in the county of Westchester and State of New York, have invented certain new and useful Improvements in Telephone Exchange Systems, of which the following is a full, clear, concise, and exact description.

This invention relates to telephone exchange systems, and particularly to a system in which the subscriber controls an indicating device for informing the operator of the number said subscriber wishes. This application is a continuing application of the applicant's copending application Serial No. 85,472, filed March 20, 1916, as to all the essential features of the invention disclosed therein.

An object of the invention is to provide at the central office an indicating device operated by mechanism at the substation to indicate to the operator the number of the called line, thereby dispensing with all conversation between the calling subscriber and the operator over the line.

Another object of the invention is the provision of a phonograph number indicating device at the central office in which the number of the called line will remain "stored up" until the operator attends to the call, at which time the number of the called line will be repeated orally to the operator as many times as the operator desires.

The invention is particularly valuable during the transition period from manual to full automatic exchange working. Substations being equipped with calling dials, as in a full automatic exchange, the subscribers receive a preliminary education in the use of such devices. In the early stages of development the central office equipment is, of course, of the manual type, and the cutover from manual to full automatic may take place gradually, or as rapidly as desired, without such change being apparent to the subscriber. The consequent confusion and worry usually experienced when full automatic working is substituted for manual working is thereby avoided.

In the drawings, Figure 1 is a diagrammatic representation of the phonograph number indicating cylinders and the reproducing mechanism for use in connection therewith; Fig. 2 is a detail view showing the driving mechanism for the reproducer; and Fig. 3 is a circuit arrangement suitable for operating the phonograph number indicating cylinders in connection with a telephone system, with so much of the system shown as is necessary for an understanding of the invention.

Referring to Fig. 1, there is shown a plurality of phonograph record cylinders 10, 11 and 12, each of which has a plurality of records 13, 14, 15, 16, etc., corresponding to the digits 0 to 9 inclusive, and arranged parallel to a common shaft 17 upon which all the record cylinders 10 are rotatably mounted. Mounted on each cylinder is a ratchet 18, which is arranged to be engaged by a pawl 19 which is operated by a magnet individual thereto. The cylinders are arranged to be independently operated to position any one of the records thereon in line with the path of travel of a needle 21 of a reproducer 26. As each cylinder moves out of its normal position, an off-normal contact 22, 23, 24 or 25 is closed for a purpose to be hereinafter described.

Should the operator, whose receiver is indicated at 27, desire to hear the number of the station set up on the cylinders 10, 11 and 12, she depresses a key 28, completing a circuit from battery through the motor 29, conductor 30, key 28 to ground, starting the motor to drive a shaft 31, which, through the medium of bevel gears 32 as shown in Fig. 2, drives a shaft 33 which has thereon an endless worm 34. A reproducer carriage 35 is provided with a roller (not shown) which engages the endless worm 34 and moves to the right as shown in Fig. 2, when the shaft is rotated. Mounted on the carriage 35 and in advance of the needle 21 is a guiding arm 36. As the reproducer carriage 35 leaves its initial position, the off-normal contact 37 is closed, providing a substitute circuit from battery through motor 29, conductor 30, off-normal contact 37, conductor 38 to ground, insuring that the motor 29 is kept running during a complete movement of the reproducer arm regardless of the subsequent position of the key 28. As the reproducer 26 reaches the outward limit of its movement, an arm 39 pivotally mounted on the carriage 35 comes into engagement with a stop pin 40. The reproducer carrying arm 41 is engaged by the pin 135 on the pivoted arm 39, and as the arm 39 moves into engagement with the stop

pin 40, the arm 41 and therefore the needle 21 of the reproducer 26 is moved upwardly out of engagement with the records on the positioned cylinders. In the normal position of the pivoted arm 39, it engages a limiting stop 42 on the carriage 35, and is held in engagement therewith by a spring 43. As the pivoted arm 39 is moved backwardly by the stop pin 40, it moves into engagement with a limiting stop 44 on the carriage 35, and it is also held in engagement therewith by the spring 43. The carriage 35, having reached the outward limit of its travel, is moved backward to its normal position by the endless worm 34 on the shaft 33. On reaching its initial position, the arm 39, which is now in engagement with the stop pin 44, is brought into engagement with a stop pin 45, which moves it over into engagement with the limiting stop 42, allowing the reproducer carrying arm 41 to move downwardly into its normal position. On reaching the initial position, the insulating pin 46 separates the springs 37, breaking the substitute circuit above traced for the motor 29, and stopping the motor with the apparatus in its normal position.

The operation of extending a call will now be described, as it is thought by this method the operation of the device in connection with a telephone system will be most clearly understood.

Briefly the operation of the device is as follows:

Any subscriber of the system wishing to converse with another subscriber removes his receiver from the switch-hook, and, through the medium of automatic switching mechanism, is placed in connection with an idle phonograph number indicating device. The subscriber then operates his calling dial to selectively operate the phonograph cylinders in accordance with the number of the subscriber wanted, and, when the indication is complete, a lamp associated with the incoming line at the operator's position is lighted. The operator observing the lighted lamp depressed a listening key, and thereby completes a circuit for a motor mechanism to drive the reproducer over the phonograph cylinders in succession, thereby having repeated to her in words the number of the wanted line. The operator then takes up the plug connected to one end of the cord used in completing the connection, and inserts the same in the jack of the called subscriber. She then depresses the ringing key to ring the called subscriber. When the called subscriber answers he is automatically placed in conversational connection with the calling subscriber.

For a detailed description of the operation it is assumed that subscriber numbered 100 wishes to speak with subscriber numbered 123. Subscriber 100 removes his receiver from the switchhook, completing a circuit from battery through left winding of line relay 47, left armature and contact of cut-off relay 49, conductor 50, line conductor 51, substation apparatus of subscriber 100, line conductor 52, right armature and contact of cut-off relay 49, right winding of line relay 47, to battery. Line relay 47 becomes energized and attracts its armature, completing a circuit from battery, left winding of line relay 47, left armature and contact of cut-off relay 49, conductor 50, armature of line relay 47, contact 55, over the start wire 56 to start the line finder, whose brushes are numbered 57, 58 and 59, in search of the terminals 60, 61 and 62 of the calling line 100. For a full description of the operation of a line finder of this character, reference may be had to application of C. L. Goodrum, Serial No. 872,743, filed November 18, 1914. The line finder herein disclosed differs from the line finder disclosed in above mentioned application in the fact that the release magnet does not control at its armature and back contact the circuit of the cut-off relay of the calling line. When the brushes 57, 58 and 59 come into engagement with the terminals 60, 61 and 62 respectively of the calling line, and the side switch of the line finder moves into position 3, a circuit is closed from battery through the winding of cut-off relay 49, terminal 62, brush 59, conductor 64, relay 65 to ground. Both the cut-off relay 49 and relay 65 operate in this circuit, the former opening the circuit for the line relay 47, and the latter closing a circuit from grounded battery, right armature and front contact of relay 65, conductor 66, right armature and back contact of relay 67, armature and contact of stop relay 69 over the start wire 70 leading to phonograph finder switch, which is indicated by the brushes 71, 72, 73 and 74. Relay 65 also completes a circuit from battery, left armature and contact of relay 65, conductor 48, lamp 53, inner left armature and back contact of relay 67 to ground, lighting lamp 53 to indicate the cord taken for use. The phonograph finder switch operates in the same manner as the line finder switch, except that in this switch the circuit of the stop relay is controlled at the armature and back contact of the release magnet, and will hunt for the terminals 75, 76, 77 and 78 of the cord circuit taken for use. When the brushes 71, 72, 73 and 74 of the phonograph finder switch have been brought into engagement with the terminals of the cord, a circuit is completed from battery, stop magnet 69, conductor 79, terminal 76, brush 72, right-hand armature and back contact of release magnet 94 to ground, energizing the stop magnet and breaking the starting circuit to stop the phonograph finder switch with the phonograph selecting apparatus

shown at the right of Fig. 3 in connection with the calling subscriber 100. A circuit is now completed from battery, left winding of line relay 80, brush 74, terminal 78, conductor 82, brush 58, terminal 61, line conductor 52, substation apparatus, calling device 84, line conductor 51, terminal 60, brush 57; conductor 86, terminal 77, brush 73, right winding of line relay 80 to battery. The line relay becomes energized and by attracting its armature, completes a circuit from battery, the slow acting relay 88, conductor 89, the armature and contact of release relay 90, armature and front contact of line relay 80 to ground. The slow acting relay 88 becomes energized and at its upper armature opens a break point in the circuit for the release magnet 94 of the phonograph finder switch, and at its lower armature closes a break point in the energizing circuit for the phonograph cylinder actuating magnets.

We have assumed that the number of the called subscriber is 123. The subscriber 100 therefore operates the dial 84 to set the phonograph cylinders 10, 11 and 12 in position to indicate such number. On the first operation, therefore, of the calling device 84, the line relay 80 is deënergized, allowing its armature to retract and complete a circuit from battery, the hundreds phonograph cylinder control magnet 95, side-switch arm 97, conductor 98, lower armature and front contact of slow acting relay 88, armature and back contact of line relay 80 to ground. Control magnet 95 becomes energized and rotates the phonograph cylinder 10 one step. Also at this instant there is completed, at the lower armature and contact of slow acting relay 88, a circuit from battery, escape control relay 92, which is also slow, lower armature and contact of slow acting relay 88, armature and back contact of line relay 80 to ground. Escape control relay 92 becomes energized and completes a circuit from battery, escape magnet 101 of the side switch, armature and front contact of escape control relay 92 to ground.

After the sending of the impulse to position the hundreds phonograph cylinder 10, the line relay 80 is held energized by the closing of the circuit at the substation 100. This prolonged energization of line relay 100 causes the escape control relay 92 to deenergize, which in turn breaks the circuit for the escape magnet 101 of the side switch, which deënergizes and moves the side switch from position 1 into position 2. The side-switch wiper 97 is now in a position to control the tens phonograph cylinder control magnet 102.

The subscriber 100 now sends two impulses by means of the calling device 84. On the first deënergization of line relay 80 a circuit is completed from battery, control magnet 102, side-switch arm 97, conductor 98, lower armature and contact of slow acting relay 88, armature and back contact of line relay 80 to ground, operating the control magnet 102 and moving the tens phonograph cylinder 11 forward one step. At this instant the circuit for the escape control relay 92 is again completed, which in turn completes the circuit for the escape magnet 101 of the side switch. When the line relay 80 is energized, the circuit for the escape control relay 92 is broken at the armature and back contact of such line relay, but the escape control relay 92 being slow acting is held up during impulses. A second impulse is sent to move the tens phonograph cylinder 11 forward another step, after which the line relay 80 is maintained energized, breaking as before the circuit of the escape control relay 92. The escape control relay 92 in turn breaks the energizing circuit for the escape magnet 101, which becomes deënergized and moves the side switch from position 2 into position 3. In this position, the side-switch arm 97 completes a break point in the circuit of the units control magnet 105.

The subscriber 100 now operates the calling device 84 to send a series of three impulses to position the units phonograph cylinder 12. Each time the line relay 80 deënergizes a circuit is completed from battery, units control magnet 105, side-switch arm 97, conductor 98, lower armature and contact of slow acting relay 88, armature and back contact of line relay 80 to ground. A circuit is also completed as heretofore described for the escape control relay 92, which in turn completes the circuit for the escape magnet 101 of the side switch. At the completion of the series of impulses to position the units phonograph cylinder, the line relay 80 is maintained energized, breaking the circuit of the escape control relay 92 at its armature and back contact, which in turn breaks the circuit for the escape magnet 101 of the side switch to move the same from position 3 into position 4.

As the hundreds, tens and units phonograph cylinders 10, 11 and 12 respectively moved out of their normal positions the off-normal contacts 22, 23 and 24 were closed. This is for the purpose of returning the phonograph cylinders to normal should the subscriber 100 at any time before the complete call is set up decide to abandon the call, at which time the line relay 80 will be deënergized for a period of time long enough to insure the deënergization of the slow acting relay 88 which, when it deenergizes, will complete a circuit from battery through the phonograph release magnet 107, through any or all of the off-normal

contacts 22, 23, 24, conductor 109 to ground at the upper armature and contact of slow acting relay 88. The energization of this release magnet 107 causes the return of the phonograph cylinders to their normal position. Also a circuit will be closed from battery, through the release magnet 94 for the phonograph finder switch, side-switch arm 110 to ground at the upper armature and contact of slow acting relay 88 to return the phonograph finder switch to normal position.

When the units phonograph cylinder has been positioned and slow relay 92 deënergizes, a circuit is completed from battery, contact 25 (closed as soon as the units phonograph cylinder left its normal position), lamp 111, armature and back contact of escape control relay 92 to ground, lighting the lamp 111, notifying the operator that the phonograph cylinders individual to such lamp are positioned, and that a call is waiting thereon.

The operator now depresses the key 28, completing the circuit for the motor 29, causing the reproducing device 26 to pass over the hundreds, tens and units phonograph cylinders in succession, causing the record thereon to be repeated to her orally. She then picks up the plug 113 of the cord taken for use and inserts it into the jack 114 associated with the line of the desired subscriber. This completes a circuit from battery, through cut-off relay 115 of the called line, conductor 116, sleeve of jack 114 and plug 113, conductor 117, relay 67 to ground. Relay 67 becomes energized and completes a circuit from battery, armature and contact of relay 119, supervisory lamp 120, inner left armature and front contact of relay 67 to ground, causing the lighting of the supervisory lamp 120. The operator then depresses the ringing key 122, which completes a circuit from a grounded source of current 124, tip of plug 113, tip spring of jack 114, conductor 125, through the substation apparatus of the wanted subscriber, conductor 126, ring contact of jack 114, ring of plug 113 to ground, to ring the bell at the wanted subscriber's substation.

When the wanted subscriber removes his receiver from the hook, a circuit is completed from battery, left winding of relay 119, ring of plug 113, ring contact of jack 114, conductor 126, through the substation apparatus, conductor 125, tip spring of jack 114, tip contact of plug 113, right winding of relay 119 back to battery, causing the energization of relay 119 and the extinguishment of supervisory lamp 120.

When relay 67 was energized, it completed a circuit from battery, left winding of line relay 129, armature of relay 67, conductor 82, out over the calling subscriber's line through his substation apparatus and back over conductor 86, armature of relay 67, right winding of relay 129 back to battery, energizing line relay 129 and maintaining the answering supervisory lamp 134 extinguished. A circuit is also closed for release relay 140 at front contact and inner armature of relay 67. The energization of relay 140 closes a break-point in the circuit of release magnet 141 of the line finder. Also when the relay 67 is energized a circuit is closed from ground, through the release relay 90, brush 71, terminal 75, right armature and front contact of relay 67, conductor 66, right armature and front contact of relay 65 to grounded battery, energizing the release relay 90, which attracts its armature to break the energizing circuit for the slow acting relay 88. Relay 88 deënergizes and at its upper armature and contact completes the circuit heretofore traced through the release magnet 107 for the phonograph cylinders and for the release magnet 94 of the phonograph finder switch, allowing them to return to normal.

The two subscribers 100 and 123 are now connected for conversation. The call is supervised and talking connection broken in the following manner. When the calling party 100 and called party 123 are through talking and hang up their receivers, relays 129 and 119 are deënergized. These relays close circuits for lamps 134 and 120 respectively, which become lighted and notify the operator that the parties are through talking and that the connection may be broken. The operator then removes plug 113 from jack 114, which causes the deënergization of relay 67. Relay 67 closes at its back contact a circuit for release magnet 141 from grounded battery, magnet 141, armature and front contact of relay 140, armature and back contact of relay 67, to ground. The circuit for the release relay 140 was opened at the front contact and armature of relay 67, when relay 67 deënergized, but relay 140 is slow to release its armature and allows the circuit for the release magnet 141 to be closed for a sufficient length of time to energize the release magnet.

What is claimed is:

1. In a telephone exchange system, in combination, calling subscribers' substations, sending devices at said stations respectively, a central office, an operator's position at said office, and a variably adjustable phonographic device at said position arranged to be variably adjusted by any of said sending devices.

2. In a telephone exchange system, a calling subscriber's substation, a phonographic device comprising a plurality of adjustable record carriers, each carrier having a plurality of records thereon, means controllable at the calling subscriber's substation for variably adjusting each carrier individu-

ally to position one of the records thereon, and reproducing means for reproducing in succession the information on the positioned records.

3. In a telephone exchange system, a calling subscriber's substation, a phonographic device comprising a plurality of adjustable record carriers arranged on a common axis, each carrier having a plurality of records arranged parallel to the axis and about the periphery of the carriers, means controllable at the calling subscriber's substation for variably adjusting each carrier individually to position one of the records thereon and reproducing means arranged to move parallel to the axis to reproduce in succession the information on the positioned records.

4. In a telephone exchange system, the combination of a central office, a phonographic device at the central office comprising a plurality of adjustable record carriers, each carrier having a plurality of records thereon, a calling subscriber's substation, a sending device thereat, means controlled by said sending device for variably adjusting each of said record carriers individually to position a record of each, and reproducing means for reproducing in succession the information on the positioned records.

5. In a telephone exchange system, the combination of a central office, a phonographic device at the central office comprising a plurality of adjustable record carriers arranged on a common axis, each carrier having a plurality of records arranged parallel to the axis and about the periphery of the carriers, calling subscribers' substations, sending devices thereat, means controlled by said sending devices for variably adjusting each of said record carriers individually to position a record of each, and reproducing means arranged to move parallel to the axis to reproduce in succession the information on the positioned records.

6. In a telephone exchange system, a calling subscriber's substation, a sending device thereat, a central office, a plurality of phonographic devices at said office, each phonographic device comprising a plurality of adjustable record carriers and each carrier having a plurality of records thereon, automatic switching means for connecting said subscriber with an idle phonographic device, and means controlled by said sending device for variably adjusting each record carrier of said idle phonographic device individually.

7. In a telephone system, a calling subscriber's substation, a sending device thereat, a central office, an operator's position at said central office, a plurality of sets of number-speaking mechanisms at said central office, each set comprising a plurality of adjustable record carriers and each carrier having a plurality of records thereon, automatic switching means for connecting said subscriber with an idle one of said number-speaking mechanisms, means controlled by said sending device for positioning said idle number-speaking mechanism in accordance with the number of a desired subscriber's substation, and means for reproducing said number to an operator at said operator's position.

8. In a telephone exchange system, a calling subscriber's substation, a sending device thereat, a central office, an operator's position at said central office, a plurality of sets of number speaking mechanisms at the central office, each set comprising a plurality of record carriers arranged on a common axis, each carrier having a plurality of records thereon arranged parallel to the axis and about the periphery of the carriers, automatic switching means for connecting said subscriber with an idle one of said number-speaking mechanisms, means controlled by said sending device for positioning the record carriers of said idle mechanism in accordance with the number of a desired subscriber's substation, and means arranged to move over said positioned carriers in succession to reproduce said number to an operator at said operator's position.

9. In a telephone exchange system, in combination, a calling subscriber's substation, a sending device thereat, a central office, an operator's position at said office, a variably adjustable phonographic device at said position arranged to be variably adjusted by said sending device, and reproducing means for reproducing the information on the adjusted phonographic device.

10. In a telephone exchange system, a calling subscriber's substation, a sending device thereat, a central office, a plurality of phonographic devices at said office, automatic switching means for connecting said subscriber with an idle phonographic device, and means controlled by said sending device for variably adjusting said idle phonographic device.

11. In a telephone exchange system, a calling subscriber's substation, a sending device thereat, a central office, a plurality of phonographic devices at said office, automatic switching means for connecting said subscriber with an idle phonographic device, means controlled by said sending device for variably adjusting said idle phonographic device, and reproducing means for reproducing the information on the adjusted phonographic device.

In witness whereof, I hereunto subscribe my name this 6th day of July A. D. 1917.

HENRY P. CLAUSEN.