766,668

~~766~~,668. PATENTED AUG. 2, 1904.

M. C. COLLIER.

CLOSURE ATTACHMENT FOR CRIBS OR THE LIKE.

APPLICATION FILED DEC. 16, 1903.

ODEL.

Fig. 1.

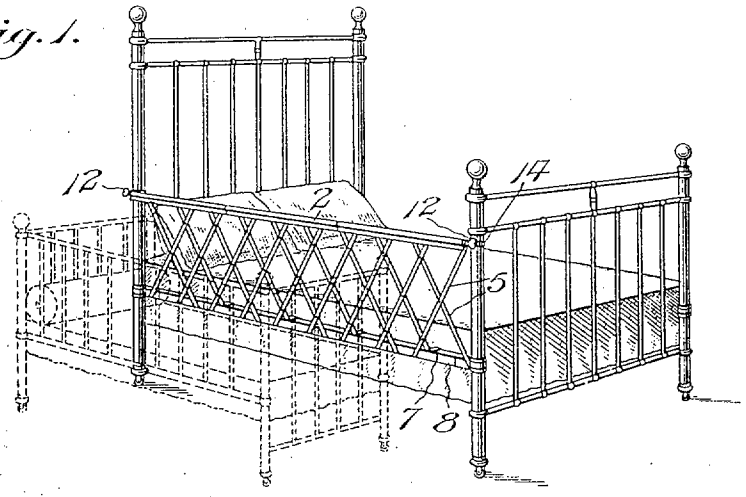

Fig. 2.

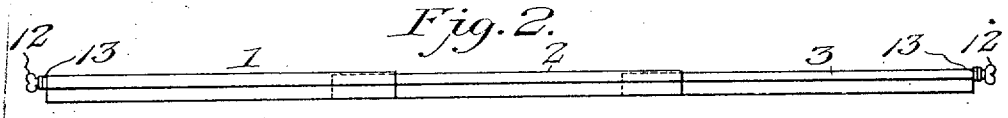

Fig. 3.

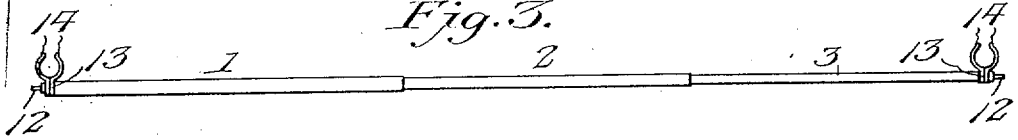

Fig. 4.

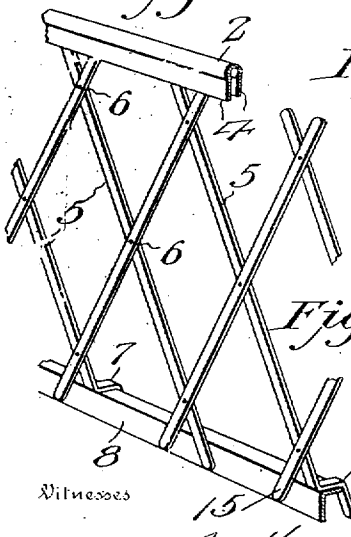

Fig. 6.

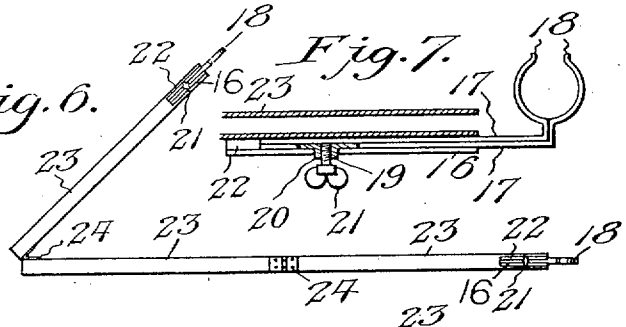

Fig. 7.

Fig. 5.

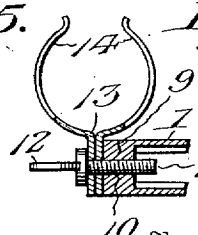

Fig. 8.

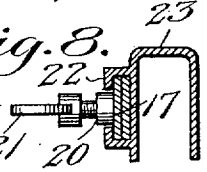

Witnesses

Inventor

Mary C. Collier

By Victor J. Evans

Attorney

No. 766,668. Patented August 2, 1904.

UNITED STATES PATENT OFFICE.

MARY C. COLLIER, OF WASHINGTON, DISTRICT OF COLUMBIA.

CLOSURE ATTACHMENT FOR CRIBS OR THE LIKE.

SPECIFICATION forming part of Letters Patent No. 766,668, dated August 2, 1904.

Application filed December 16, 1903. Serial No. 185,435. (No model.)

To all whom it may concern:

Be it known that I, MARY C. COLLIER, a citizen of the United States, residing at Washington, District of Columbia, have invented new and useful Improvements in Closure Attachments for Cribs or the Like, of which the following is a specification.

This invention relates to a closure or guard means for application to crib attachments, beds, or other devices; and the primary object of the same is to provide a simple and effective collapsible closure or guard for removable application to the sides of cribs, beds, and the like to prevent an occupant of the latter from rolling out. The improved attachment may also be used at times as a dividing-partition means, and when applied to a crib attachment or rail of a bed it will form an extension for the bed or crib rail.

The invention consists in the construction and arrangement of the several parts, which will be more fully hereinafter set forth.

In the drawings, Figure 1 is a perspective view of a bed, showing a crib attachment thereon in dotted lines and having the improved closure applied thereto. Fig. 2 is an elevation of the head of the closure. Fig. 3 is a top plan view of the closure-head. Fig. 4 is a detail perspective view of a portion of the closure and a bed-rail. Fig. 5 is a horizontal section through one end of the head of the closure and a portion of the clamp thereon. Fig. 6 is a side elevation of a modified form of the closure-head. Fig. 7 is an enlarged horizontal section through a portion of one end of the head as shown in Fig. 6. Fig. 8 is a transverse vertical section through one end of the head as shown in Fig. 6.

Similar numerals of reference are employed to indicate corresponding parts in the several views.

The improved attachment or closure as shown in the accompanying drawings is applied to a crib held on one side of a bed; but it will be understood that this illustration is to serve as a means of demonstrating only one practical application of the attachment. The attachment has a general use and is adapted to be employed in connection with other devices and in some instances may efficiently serve as a dividing-partition.

The improved closure, as shown by Figs. 1, 2, 3, and 4, includes in its organization a head 1, made up of telescopic sections 2 and 3, the latter being increased in number in proportion to the dimensions of the entire attachment. The sections 3 are formed from bent sheet-metal strips, their upper extremities being curved to provide seats and their lower extremities overlapping in the form of flanges 4, which are spaced apart from each other in parallel relation and embrace the upper extremities of metallic straps or slats 5, fulcrumed at an intermediate point, as at 6, to produce a lazy-tongs structure. A portion of the straps or slats 5 are longer than the remaining ones and have their lower ends bent at an angle to provide securing-terminals 7, which are removably fitted over and correspond in contour to the side rail 8 of a bed, as shown by Fig. 4.

The opposite ends of the head 1 have closures 9, one in each end and formed with central screw-threaded openings 10, in which elongated clamping-screws 11 are adjustably mounted and have outer winged heads 12. Each clamping-screw 11 passes through and operates in conjunction with the shanks 13 of clamping-jaws 14, which are adapted to embrace the corner-posts of a crib attachment or similar device of a bed in accordance with the application of the closure. No securing means is applied to the head 1 for engagement with the upper ends of the straps or slats 5, so that the latter may be free to slide with the parts of the head or in the latter to vary the longitudinal adjustment of the attachment. The head is prevented from separating from the straps or slats forming the lazy-tongs construction by securing the clamps 14 on the bed or crib posts at such elevation as to prevent the lower terminals of the straps or slats 5 from becoming separated from the rail to which they are applied. The securing-terminals 7 at the lower ends of a part of the straps or slats coöperate with the straight terminals 15 of the remaining straps to provide a reliable embracing means for the rail, which they are

adapted to engage and give the attachment a stable support at its lower end.

Figs. 5, 6, 7, and 8 illustrate a modification in the means of applying the clamp device to the head, and in this instance the closures 9, heretofore described, are not used, the outer portions of the heads at the opposite ends having guides 16 secured thereto, one on each end of the head, in which elongated angular shanks 17 of clamping-jaws 18 are slidably inserted, the terminal of each set of shanks 17 having a boss 19 with a screw-threaded opening 20 therethrough to receive a clamping-screw 21, the said boss being slidable in a longitudinal slot 22 in the guide. The end of the clamping-screw 20 is adapted to bear against the terminal of the inner shank 17 to draw both shanks in close relation and tighten the jaws 18 around the posts to which they are applied. The form of the head of the attachment in this instance is angular in contour and indicates that the effectiveness of the improved device is not confined to any precise contour of head. The clamping attachment shown by Figs. 5, 7, and 8 is intended particularly for application to the form of head illustrated by Fig. 6 and wherein the telescopic sections are replaced by a head made up of a series of joined sections 23, connected by hinges 24 at their upper edges, so that they can be folded or collapsed to reduce the extent thereof.

In applying either form of the collapsible closure the head is lengthened sufficiently to take up the distance between the opposing posts, and the clamping-jaws at the ends of the heads are caused to engage the posts after the lower end of the lazy-tongs construction has been disposed on the rail. After the lower end of the attachment has been properly positioned the clamps are tightened around the posts, and the closure is thereby firmly held in place. It is proposed to construct all the parts of the attachment of light sheet metal and to ornament the same in any manner desired by plating or painting. When the closure is interposed between the side of a crib and bed, the occupant of the crib is prevented from rolling out of the latter onto the bed.

The improved attachment provides a valuable accessory to the crib attachment disclosed in my Patent No. 732,618, granted June 30, 1903; but, as before explained, the closure may be used wherever found applicable.

Changes in the proportions, dimensions, and minor details may be resorted to without departing from the spirit of the invention.

Having thus fully described the invention, what is claimed as new is—

1. In a closure of the class set forth, the combination of a collapsible head, a lazy-tongs construction having its upper terminal slidably retained in said head, and securing means at opposite extremities of the head.

2. In a closure of the class set forth, the combination of a collapsible head, a lazy-tongs construction having its upper terminal slidably retained in the said head, and clamps adjustable in connection with opposite ends of the head for detachably securing the closure to a support.

3. In a closure of the class set forth, the combination of a collapsible head, a series of slats pivoted at intermediate points and having their upper terminals adjustably held by the head, the lower terminals of the slats being in part bent at an angle to provide embracing means, and securing devices connected to opposite ends of the head.

4. In a closure, the combination of a collapsible head, a lazy-tongs construction slidably retained in the said head and having lower readily-removable embracing-terminals, and clamp devices adjustably carried by opposite ends of the head.

In testimony whereof I affix my signature in presence of two witnesses.

MARY C. COLLIER.

Witnesses:
HARRIET COHIE,
MAY EDELEN.