Office de la Propriété Intellectuelle du Canada
Un organisme d'Industrie Canada

Canadian Intellectual Property Office
An agency of Industry Canada

CA 2143617 C 2004/02/17

(11)(21) 2 143 617

(12) BREVET CANADIEN
CANADIAN PATENT

(13) C

(86) Date de dépôt PCT/PCT Filing Date: 1993/09/07
(87) Date publication PCT/PCT Publication Date: 1994/03/17
(45) Date de délivrance/Issue Date: 2004/02/17
(85) Entrée phase nationale/National Entry: 1995/02/28
(86) N° demande PCT/PCT Application No.: US 1993/008412
(87) N° publication PCT/PCT Publication No.: 1994/006249
(30) Priorités/Priorities: 1992/09/09 (942,718) US; 1993/03/01 (024,670) US; 1993/08/17 (105,811) US

(51) Cl.Int.^{6}/Int.Cl.^{6} G02F 1/1335, G02F 1/133, G09G 3/00, H04N 13/04

(72) Inventeur/Inventor:
EICHENLAUB, JESSE B., US

(73) Propriétaire/Owner:
EICHENLAUB, JESSE B., US

(74) Agent: KIRBY EADES GALE BAKER

(54) Titre : SYSTEME D'ECLAIRAGE STROBOSCOPIQUE POUR AFFICHEURS VIDEO
(54) Title: STROBOSCOPIC ILLUMINATION SYSTEM FOR VIDEO DISPLAYS

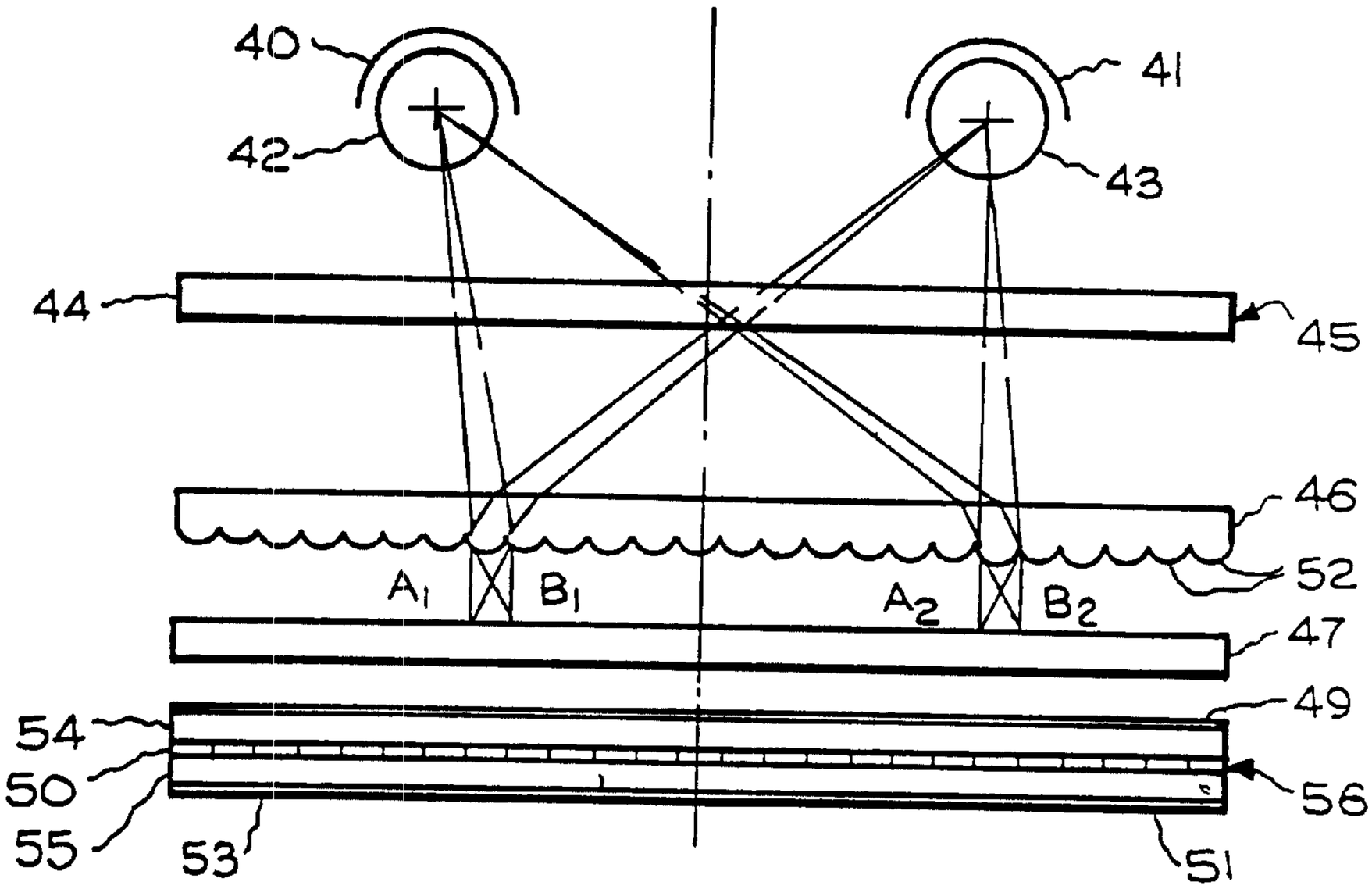

(57) Abrégé/Abstract:
In a flat panel autostereoscopic display full resolution equal to the number of pixels in the two-dimensional light valve array, which serves to generate images, is achieved by incorporating an illumination system which makes use of stroboscopic light sources or continuously lit light sources in combination with electro-optical shutter means. The lighting system when used in conjunction with a 2-D flat panel display, achieves image resolution exceeding several times the pixel resolution of the light valve array.

ABSTRACT

In a flat panel autostereoscopic display full resolution equal to the number of pixels in the two-dimensional light valve array, which serves to generate images, is achieved by incorporating an illumination system which makes use of stroboscopic light sources or continuously lit light sources in combination with electro-optical shutter means. The lighting system when used in conjunction with a 2-D flat panel display, achieves image resolution exceeding several times the pixel resolution of the light valve array.

STROBOSCOPIC ILLUMINATION SYSTEM FOR VIDEO DISPLAYS

BACKGROUND

1. Field of the Invention

This invention relates to illumination systems designed to improve image resolution and permit look-around viewing in liquid crystal and similar flat panel transmissive three dimensional (3-D) displays and enhanced resolution and color two dimensional (2-D) displays, for use in computers, television and the like viewing apparatus.

2. Prior Art

Several display systems are on the market today which are capable of generating three-dimensional images based on the use of stereopairs, i.e., complementary images, which when directed to the appropriate eye of the observer, produce a perception of three-dimensionality. Two of such

2143617

systems, one made by Stereographics, Inc., the other by Tektronix Corp., utilize cathode ray tubes in conjunction with liquid crystal light valves designed to direct the appropriate half of the stereopair to the left or right eye of the observer. Both of these systems require the observer to wear special glasses. In addition, in order to achieve full resolution, these displays operate at frame rate twice the standard television (TV) scanning rates.

A third system made by Dimension Technologies Inc. is autostereoscopic, i.e., it permits the observer to perceive 3-D without the need to wear glasses. The system uses a transmissive image generating liquid crystal panel (LCD) and is disclosed in US-A- 4,717,949; 4,829,365 and 5,040,878. In this system a multiplicity of parallel, equidistant, thin, bright, vertical light lines is generated using an optical device termed the "reflection plate" which carries on its one surface opposite the planar surface facing the LCD, a series of parallel ridges equal in numbers to the number of said light lines. The ridges, triangular in cross-section, are designed to intercept light rays tangentially projected by a cylindrical lens onto said ridge-bearing surface of said reflection plate from a linearly configured light source disposed on the vertical side of the LCD. This method for generating a lattice of lines is specifically described in US-A-5,040,878. An image-generating LCD is situated parallel to and in front of a reflection plate, separated by a small fixed distance of, say, 3 mm, such that the observer, due to the parallax effect of vision, sees with his left eye the light lines through the odd-numbered pixel columns of the LCD, and the even-numbered pixel columns with his right eye. Thus, an illusion of depth is created, albeit by sacrificing one half of the pixel resolution in the 3-D image.

Another optical configuration for the generation of lines for an autostereoscopic display has been disclosed in US-A-5,036,385, which employs a lenticular lens or fly's eye lens to generate a lattice of light lines. This

configuration allows multiple sets of light lines in different locations to be made to flash on and off in sequence, allowing for the display of full resolution autostereoscopic images that can be viewed in correct perspective from across a wide angle. These configurations also allow the generation of multiple sets of light lines or points for the display of two dimensional images with resolution greater than that provided by the pixels of the LCD by means explained in US-A-5,036,385.

Accordingly, it is an object of this invention to provide illumination systems for imaging devices, such as disclosed in US-A-5,036,385, which will be effective, economical and convenient for implementation of full resolution 3-D displays, look around 3-D displays, and enhanced resolution 2-D displays.

Another object of this invention is the use of fluorescent lamps for the illumination system.

A further object of this invention is to utilize stroboscopic gas filled arc lamps for said illumination systems.

Yet another object of this invention is to use electro-optical shutters in conjunction with the appropriate light source for said illumination systems.

Still another object of this invention is to utilize high-brightness projection type cathode ray tubes as the means for generating appropriate light patterns for use in said illumination systems.

An additional object of this invention is to use two-dimensional matrices of high-brightness light-emitting diodes (LEDs) of any one or any combination of at least three different colors as the means for generating appropriate light patterns for use in said illumination systems.

A further object of this invention is to use an electro-luminescent or AC plasma display as light sources for generating appropriate light patterns for use in said illumination systems.

Yet another object of this invention is to provide electronic control systems to control the timing of on-off states of said light sources and said electro-optical shutters in synchronization with the raster scanning of said flat panel displays for the purpose of formation of 3-D and 2-D images.

Still a further object of this invention is the implementation of said illumination systems using a plurality of light sources emitting light of different colors in conjunction with a monochromatic flat panel light valve displays for the purpose of generating full resolution 3-D and enhanced resolution 2-D color images without image breakup being apparent to the user.

It is also an object of this invention to provide a device which can sense the position of a single observer's head, and position the optics within the stereo display so that the central viewing zone is automatically aligned on the observers head, and remains aligned on it as the person moves their head back and forth and sideways.

A further object of this invention is to provide a device that allows an observer a wide latitude for head movement and body position when using an autostereoscopic display.

Another object of this invention is to provide a device which uses head position data to alter the operation of a software program, so that the program always displays images on a screen with a perspective appropriate to the observer's eye positions.

Yet another object of this invention is to achieve the above objectives without the use of moving parts within the display.

Still other objects will be apparent to those skilled in the art upon reference to the following detailed description and the claims.

SUMMARY OF THE INVENTION

In accordance with this invention there is provided in both autostereoscopic and non-autostereoscopic high resolution displays, the improvement in illumination system comprising a plurality of linear or point like light sources, an electronic means for controlling the on and off states of said light sources in synchronization with the process of image generation on an electronically controllable light valve, a lenticular or fly's eye lens sheet spaced apart from and in front of said light emitting sources so as to focusing the light into patterns of lines, line segments, or point like areas, said light patterns illuminating selected portions of the light valve.

In accordance with one aspect of the present invention there is provided an improved illumination system for high resolution displays, comprising a linear or point like light source, an electronic means for controlling the on and off states of said light source in synchronization with the process of image generation on an electronically controllable light valve array, optical focusing means spaced apart from and in front of said light source so as to focus the light into patterns of lines, line segments, or point like areas in a plane substantially adjacent to the light valve array, said focusing light patterns illuminating selected portions of the light valve array.

In accordance with another aspect of the present invention there is provided an improved illumination system for an autostereoscopic display comprising a point like or linear light source and optical focusing means spaced apart from and in front of said light source so as to focus the light into arrays of lines, line segments, or point like areas on a plane substantially adjacent a light valve array, said focusing light patterns illuminating selected portions of the light valve array.

BRIEF DESCRIPTION OF THE DRAWINGS

FIG. 1 is a schematic diagram which illustrates the basic optical concepts of the invention.

FIG. 2 is a schematic view from above of another embodiment of this invention, an illumination system employing two stroboscopic light sources.

FIGs. 3a - 3c are a timing diagram which illustrates the timing involved between the address of pixels and the generation of images due to changes in pixel states after address and the flashing of the various lamps of FIG. 2.

FIG. 4 is another timing diagram which illustrates the

relation between the generation of video fields in the display and the timing of the light pulses from the stroboscopic light sources.

FIG. 5 is a portion of the system of FIG. 2 demonstrating the effect of varying the distances between the elements of the optical system.

FIG. 6 is a schematic optical layout, as seen from above, in which a plurality of stroboscopic light sources are employed operating in synchronism with the image generation using column by column addressing of the liquid crystal panel.

FIG. 6A is an arrangement that can be used to generate four sets of light lines for a four zone display.

FIG. 7 shows schematically the configuration of a display using the illuminating system of FIG. 6.

FIG. 8 is an autostereoscopic display utilizing segmented light sources for generating light lines of partial length to provide further improvement in the method for using stroboscopic means to increase resolution of autostereoscopic and 2-D displays where the liquid crystal display is addressed row by row.

FIG. 8A illustrates a lamp arrangement capable of producing four sets of light lines.

FIG. 9 is a schematic diagram of an optical layout for using electro-optical shutter means in conjunction with linear geometry light sources in another version of an illumination system of the present invention.

FIG. 10 is a schematic diagram of a top view of an optical layout for implementing the illumination system using a cathode ray tube.

FIG. 11 is a schematic diagram of a top view of an optical layout for using an electro-luminescent device or an AC plasma display as a light source in the illumination system.

FIG. 12 is a schematic diagram of an optical layout for using light emitting diodes as light sources in the illumination system.

FIG. 13 is a schematic diagram of an optical layout of an enhanced resolution 2-D display in which light emitting diodes of different colors are used as light sources and a fly's eye lens is employed as the optical means for directing and focussing light.

FIG. 14 is a schematic diagram of a top view of an optical layout and control electronics for implementing both 2-D and 3-D displays using light sources of different colors.

FIG. 15 diagrams an alternate illumination configuration using a large number of lamps and a suitable fly's eye lens to achieve the same effect as the illumination system in FIG. 2, but which occupies a smaller volume.

FIG.s 16a - 16c diagrams the timing involved between the address of the LCD, changes in pixel states after address, and flashing of the various lamps shown in FIG. 15.

FIG. 17 is a magnified view of a section of an LCD illustrating how subregions of pixels can be illuminated by red, green, and blue light in a certain spatial pattern and in a certain temporal sequence.

FIG. 18 diagrams an illumination system that can be used to create the spatial patterns and temporal sequence illustrated in FIG. 17.

FIG. 19 is a magnified view of an LCD showing an alternate spatial pattern of colored illuminated subregions that can be illuminated in a certain temporal sequence.

FIG. 20 is a drawing of part of an illumination system that can be used to create the spatial pattern and temporal illumination sequence shown in FIG. 19.

FIG. 21 is a magnified view of part of an LCD showing how a larger number of subregions in a certain spatial pattern can be illuminated within each pixel in a certain temporal sequence.

FIG. 22 is a magnified view of part of an LCD illustrating a larger spatial pattern of colored subregions within a larger number of pixels.

FIG. 23 is a magnified view of part of an LCD illustrating how linear subregions of pixels can be illuminated in a certain spatial pattern and in a certain temporal sequence.

FIG. 24 is a magnified view of part of an illumination system that can be used to generate the pattern of FIG. 23.

FIG. 25 is a top view of a head tracking system.

FIG. 26 is a close up of the lenticular lens of FIG. 6, with a slide mechanism and motor that can cause the lens, and thus the light lines and autostereoscopic viewing zones, to move sideways.

FIG. 27 is a light valve and illumination system that produces two independently controllable sets of lines, which can be used to cause viewing zones to move sideways without moving parts.

FIG.s 28a through 28c are a magnified view of how the embodiment of FIG. 27 looks to an observer's eye while the

system is in use.

FIG. 29 is another specific embodiment that causes the viewing zones to move sideways using three sets of light emitting lines.

FIG.s 30a through 30c are a top view of the system of FIG. 29.

FIG.s 31a through 31c are a magnified view of how the embodiment of FIG. 29 looks to an observer's eye while the system is in use.

FIG. 32 is a top view showing the various viewing zones formed by the three sets of light lines shown in FIG. 29, and how they overlap.

FIG. 33 is a top view of a variation of the illumination system, similar to that of FIG. 6, which can create more than one set of lines and cause the sets to independently turn on and off.

FIG. 34 illustrates how the head tracking system operates with a hysteresis feature added.

DESCRIPTION OF THE PREFERRED EMBODIMENTS

The basic concept of displays using the stroboscopic illumination systems object of this invention is explained with reference to FIG. 1 which depicts schematically a general configuration of autostereoscopic and 2-D displays incorporating the system. A two dimensional light valve array 6, such as a liquid crystal panel (LCD) or a similar imaging device, is used to generate images by electronically scanning the array 6 which is comprised of rows and columns of individual pixels. The operation of such imaging devices is well known to those skilled in the art. Information is inputted to the LCD 6 via an input 10 which is usually a ribbon cable.

The illumination of the LCD 6 is provided by the stroboscopic or non-stroboscopic light source means 3, which is described in its several versions in the following, can consist of several different types of light sources, some in combination with electro-optical shutters. The emitting regions of the light sources will generally be long, thin, and vertically oriented or will be small and point like, as described in US -A-5,036,385. Light source means 3 is controlled and driven by signals through input 9 from the electronic control module 1. Control module 1 receives its timing signals through input 8 and generates a sequence of light flashes appropriately synchronized with the generation of an image on LCD 6. In addition to light sources or combination of light sources and electro-optical shutters, the light source means 3 contains appropriate reflectors, mechanical supports, cooling means, and means for adjusting the position of said light sources to achieve a desired geometry of the illumination system. An opaque flat black non-reflective barrier 96 blocks the area between and to the sides of the light sources 3, so as not to allow light to exit the light source 3 or be reflected from the light source 3 from points other than the light source 3. Barrier 96 can be a flat black metal plate with slots or holes cut in its surface in front of the light source 3.

A system of baffles (not shown) consisting of opaque barriers extending out from the barrier 96 can be placed in the system to prevent light from light source 3 from reaching points on the lenticular lens far from the area directly in front of the light source 3. These barriers generally reduce the amount of scattered light in the system, and reduce the brightness of ghost images - that is, images intended for the right eye which seen faintly by the left eye and vice versa - which are caused by scattered light which strikes the diffuser 5 in the area between the light lines.

Optical means 4, such as a lenticular lens or fly's eye

lens, focuses the light from said light source means 3 onto a weakly diffusing transparent panel 5, the purpose of which is to slightly broaden the angle from which these light lines can be seen though the LCD 6. The panel 5 typically consists of a clear substrate of a certain thickness, with a thin layer of diffusing material bonded to its rear most surface. A glass or plastic panel 7 with an antireflection (AR) thin film coating 11 on its front surface is disposed of in, or bonded to the front of the LCD 6 so as to reduce disturbing reflections from the ambient light sources.

This generic system, when certain details are added and when it is operated in different ways, can be used to create one or more sets of light lines or light points in different positions and control which of the sets of light lines or points is on at a given time, as are necessary for several advanced types of displays that are described in US-A-4,717,949, 4,829,365 and 5,036,385.

If only one set of steadily shining light source lines is used, the system can be used to generate the steadily shining vertically oriented light lines, or arrays of light points, behind an LCD, as described in US-A-4,717,949 and 4,829,365. This system will produce autostereoscopic images with less resolution than the LCD itself. In some embodiments it will also create certain position restrictions for an observer - the observer must position himself so that his eyes are located within certain viewing zones within which right eye and left eye images are seen.

If multiple sets of independently controllable, steadily shining light sources are used, with each set capable of being turned off and another turned on upon command of a device which senses the position of an observer's head, then the viewing zones within which the autostereoscopic images are seen can be made to move to follow the observer's head as it moves, thus removing the position restrictions associated with the devices described in US-A-4,717,949 and 4,829,365. The operation of this type

of system is described in detail later in this application.

As described in detail in US-A-5,036,385, the doubling of the pixel resolution of a 3-D image generated using an autostereoscopic display is achieved by rapidly generating partial images on the LCD 6 and stroboscopically illuminating the appropriate section on LCD 6 in synchronism with the image generation using appropriate fast flashing light systems. In this manner it is possible to use the same sets of pixel columns to display left and right halves of the stereopair, thus doubling the resolution of the display, as compared to earlier schemes, e.g., see US-A-4,717,949. If said partial images are generated and illuminated at a rate above the fusion frequency of vision, no flicker is perceived.

The look-around capability in autostereoscopic displays, as described in US-A-5,036,385, makes it possible for the observer to sees the 3-D image from several perspectives, not unlike a hologram. To implement this function several images representing the different perspective views of the object or a scene are interlaced with one another and are scanned in sequentially into the LCD 6 and the stroboscopic illumination is synchronized such that the different perspective views appear in different viewing zones, so that as the head of the observer moves with respect to the screen of the display, appropriate views, corresponding to the perspective appear. Such images of actual scenes or objects can be generated in real time using a number of TV camera pairs, or computer-generated images can be presented using one of several available image rotation programs.

A similar approach can be used to increase the resolution of non-stereoscopic (2-D flat) images to several times beyond the physical pixel resolution of an LCD. In this case, different subsections of each pixel are sequentially illuminated, while each pixel varies its transparency to correspond to different sub sections of a

high resolution image, such that a detailed total image can be observed because of vision persistence with resolution several times greater than the pixel resolution of the LCD 6. In this latter case, the light lines are so positioned with respect to the pixel columns in the LCD 6 that at any given instant the observer sees only a part of a given pixel. Thus, the complete high resolution image is built up sequentially but fast enough to avoid flicker.

Some of the choices of components available for use in the illumination system when used for these various display configurations are described below.

In the present embodiment of the autostereoscopic display 2 the light source 3 is a bank of aperture fluorescent lamps, i.e., a fluorescent lamp with a narrow transparent slit parallel to its major axis, internally scribed into the light-emitting phosphor. The configuration allows for very bright light to be emitted by the lamp through said slit.

In place of said fluorescent lamp a short filament incandescent lamp has been used in conjunction with a fiber optic device which converts the image of the short filament into a long line of light which is then directed in a similar manner onto said lenticular lens sheet.

Intense illumination, and consequently bright images, can be generated using linear gas filled arc stroboscopic lamps, such as xenon flash lamps, as the light sources 3 in the above described light line generation scheme. The stroboscopic lamps operate at a rate considerable above the fusion frequency threshold of human vision (24 - 30 Hz), so that no flicker is perceived. Gas filled DC arc lamps can also be used.

Another method of illumination is to use a very bright point like incandescent lamp situated at some distance behind the lenticular lens 4. This method of illumination

produces exceptionally bright 3-D images.

Xenon flash lamps and light emitting diodes (LEDs) light sources have also been experimentally utilized.

Other possibilities for light sources for this illumination system are projection type cathode ray tubes (CRT), electro-luminescent and AC plasma display panels

The pixels on these types of displays generally can be made to emit their light in strobe fashion when addressed, and thus can be used as light sources for the type of illumination systems described in this application.

Because in the present autostereoscopic display referenced above one half of the pixel columns of the LCD are used to display one half of the stereopair, the resolution of 3-D images with this type of display is one half of the pixel resolution of the LCD.

A top view of an embodiment of the invention using two stroboscopic light sources is shown schematically in FIG. 2. Light sources 42, 43 have linear geometry and are operated sequentially in a stroboscopic mode. The light sources 42, 43 can be any of the types of light sources described above. Reflectors 40, 41 can be used to increase the intensity of light projected toward the front of the display.

The light lines required in this embodiment to make it possible for the observer to perceive an illusion of a full resolution 3-D image are generated by means of the lenticular lens 46 which is a large array of thin, evenly spaced cylindrical lenslets forming a part of a transparent substrate. The geometry of the illumination system is so designed that light source 42, when it is on, generates a set of vertical light lines of which two, B1 and B2, are indicated in the drawing, to the right of the centers of the lenslets 52; and source 43 generates a set of vertical light lines, A1 and A2, to the left of the center of the lenslets

52. Only one set of light lines can be seen at a time because these light sources 42 and 43 operate sequentially. More lamps can be used to generate multiple sets of light lines for the full resolution displays with look around capability.

The lenticular lens 4 is a transparent plate which has on its one surface an array of very narrow vertically disposed parallel cylindrical lenslets. The number of said lenslets is equal to one half of the number of pixel columns of LCD 6 or less. The fly's eye lens version uses a two dimensional array of spherical lenses of circular or square outline on the same type of transparent plate. It can be used to image thin, vertically
oriented light sources into light lines or it can be used to image smaller, more point like light sources into light spots. The various means of illumination described above can be utilized with these lenses.

It is desirable in many applications to be able to switch between 3-D image display, in which each eye sees different pixels on the LCD, and 2-D image display, in which both eyes see all the pixels. A commercially available electrically controlled diffuser 44 is diffuse when 2-D images are being displayed. When 3-D presentation is desired, the diffuser 44 is actuated by applying a voltage via input 45 such that it changes its state from strongly diffusing to transparent thus changing the nature of illumination from the type of uniform, diffuse illumination as required for 2-D images to one in which the light sources 42 and 43 are imaged by the lenticular lens 46 to generate a lattice of light lines for 3-D imaging. Such diffusers are made by Polytronics and Raychem in the United States, and other companies overseas.

It is generally desirable that the lenticular lens 4 and electronically controlled diffuser 44 have anti reflective coatings on their front most and rear most surfaces, that any non diffusing surface of weakly diffusing

transparent panel 47 has an anti-reflective coating, and that the rear most surface of the LCD has an anti reflective coating. As an alternative, the front most surface of diffuser 5 can be bonded to the rear most LCD surface with an optically clear bonding agent, achieving the same effect of greatly reducing reflections at these surfaces.

The lenslets 52 focus the images of the active parts of the light sources 42 and 43 on the weakly diffusing transparent panel 47, the purpose of which is to slightly widen the angle from which said light lines are visible to the observer, i.e., to widen the zone of observation and also make the brightness of the illumination appear to be more uniform across the display. In the case of 3-D autostereoscopic imaging, locating the diffuser at the plane where the lines are focused is the only placement that works well. However, in the 2-D high resolution imaging case, the light lines or spots will ideally be located at the liquid crystal pixel layer itself, which is in the middle of the LCD glass where typically no diffuser can be placed. In the 2-D case, good results in terms of even illumination can be obtained with a weak diffuser placed practically anywhere in the available space between a plane several millimeters in front of the light source and the front of the LCD. However, the viewing angle is broadened only if the diffuser is placed on the front of the LCD. In the case of 2-D high resolution imaging, one also has the option of focusing the light spots or points through the LCD pixels and onto a diffuser mounted in front of the LCD.

The observer sees the light lines through the LCD 53 which comprises a two-dimensional array of cells 50 filled with a liquid crystal substance, and sandwiched between two sheets of glass 54 and 55 which are coated with polarizing film 49 and 51. The driving signals to control image generation on said LCD 53 are fed though the input 56.

Most embodiments that move the viewing zones to follow the observer's head require multiple sets of steadily

shining lamps. Such a system is described below.

FIG. 33 (another top view) shows how a lenticular lens and linear lamp arrangement can be used to produce two, three, or many sets of independently controlled light emitting lines. In FIG. 33 independently controllable sets of lamps 470, 471, 472 are spaced behind a lenticular lens sheet or fly's eye lens sheet 473 with lenticular lenses or fly's eye lens columns 474 parallel to the lamps and oriented in a vertical direction parallel to the lamps. A lenticular diffuser 475 is again placed at the distance from the lenses where light from lamps 470, 471, and 472 are focused, and at a certain distance behind the pixel layer 482 of LCD 481. Baffles 476, barriers 477, and anti-reflective coatings are again used to minimize scattered and reflected light. The lenticular lenses 474 image the light from lamps 470 - 472 onto the diffusion layer along different sets of lines 478 - 480, each set being at a different position on diffuser 475. The light from lamps 470 along lines 478, the light from lamp 471 along lines 479, and the light from lamps 472 along lines 480. By turning lamps 470 - 472 on and off independently, it is possible to cause light line sets 478 - 480 to independently turn on and off. Note that the number of different sets of light lines formed with this arrangement can be equal to the number of independently controllable sets of lamps. Although three sets of lamps and light lines are shown here, any number can, in theory, be used.

An electronic means 483 would be provided to turn one and only one lamp on at any given time through operation of lamp power supply electronics 484. In this embodiment of the invention, the electronics switch between the lamps according to information received from a observer's head position sensing device to be described. Electronic means 483 is typically a microprocessor based device that is capable of turning different lamps on and off according to input in the form of X, Y and Z Cartesian coordinate head position information. As before fluorescent lamps or arc

2143617

strobe lamps would be ideal for this application.

This illumination system is, of course, not the only way to produce either single, stationary, sets of light emitting lines or multiple sets of light emitting lines in different locations that can be turned on and off independently. Other possible systems include the embodiments using a special side illuminated reflector plates described in US-A-5,040,878.

Other methods of producing different sets of light lines in different positions behind an LCD with light from different sources, as well as variations of the systems described above, will be apparent to those skilled in the art. For example, variations on the system described above include the use of a fly's eye lens array instead of the lenticular lens, and use of columns of point like light sources instead of linear vertical oriented light sources.

FIG. 25 illustrates a head tracking system that can be used with displays employing the illumination systems described above. As a representative example of a head position sensing device, three ultrasonic transducers 420a, 420b, 421 are positioned along the top of the display case 430 of FIG. 25. In practice, such position sensors are not limited to ultrasonic transducers. A number of different types of sensors can provide information on the head position, to be used by the mechanical or electro-optic methods described above to shift the position of the light lines. For example, the Polhemus Company makes an electro-magnetic sensor which, combined with an element that can be worn on the body or head, is capable of determining the location of the element to a high degree of accuracy. The Polhemus system is particularly effective in situations where a helmet is worn, since the element can be mounted unobtrusively on or within the helmet. Another type of sensor uses infrared light reflected off the head to determine the head's location. Origin Instruments makes such a sensor, which reflects infrared light off of a small

reflective spot attached to the forehead or glasses. Another infrared system described by Pund in US-A-4,649,425, reflects light directly off the head and does not require the user to wear any reflective device. Those familiar with the art will be aware of other types of head position sensors and other variations of the types just described.

In the ultrasound system of FIG. 25, an electronic pulse generator 422 causes the middle transducer 421 to periodically send pulses of ultrasound into the environment. The other two transducers 420a, 420b mounted near the sides of the display, listen for return echoes. Generally, all the transducers will be located at the back of horn reflectors 423 to concentrate the outgoing beam in a forward direction, and shield the listening transducers 420a, 420b from sound coming from anywhere but the forward direction.

Upon receiving ultrasonic energy, receiving transducers 420a, 420b send a signal to electronic interface 424 whose amplitude is proportional to the intensity of ultrasonic wave being detected at any given moment. Electronic interface 424 contains a filter which notes the time at which the first signal above a certain intensity is received. This signal will be a signal from the closest point on the closest object to the transducers.

A computing device 425, such as a microprocessor, uses the times measured between the emitted pulse from the central transducer 421 and the received echo from the two receivers 420a, 420b to calculate the position of the object, presumably the observer's head 427, which is causing the echo. A variation of the ultrasound device places the central transducer 421 on a clip on device worn by the user, instead of mounting it on the display 430. This can be attached to the users clothing directly below the center of his or her face. The transducer 421 should ideally be powered by a battery so that no cords or other devices are needed between the observer 427 and the display or other power source.

All of the head position sensors described above have in common the ability to determine the position of the head 427 in at least one dimension namely the horizontal direction parallel to the screen surface. Ideally, the head position in the other two dimensions, forward and back from the screen, and vertically, can also be determined. The Polhemus device can determine head position in all three dimensions, and the Origin Instruments and Ultrasound device described can determine position in the Y (side to side, horizontal) and Z (toward and away from the display) dimensions. In certain situations it may be desirable to use more than one of such sensing devices in combination, in order to determine the observer's positions in all coordinates.

Information on the head's 427 position is used by the microprocessor 425 to change the position of the light emitting lines behind the display, thus causing the viewing zones to move sideways, to stay centered on the observer's head 427.

A method of accomplishing this with the illumination system shown in FIG. 6 is shown in the magnified view in FIG. 26. Here, a motor 419 is attached to a slide mechanism 426 within which the lenticular lens 69 of FIG. 6 is held. Signals from the microprocessor 425 cause the stepping motor 419 to extend or retract its shaft 341, causing the slide mechanism to move. As the slide moves, the illuminating lines 413 formed on the diffuser 417 move sideways relative to the pixels 404 on the LCD 401 (not shown), and the viewing zones shift position. For example, in FIG. 26 if the lenslets 412 are shifted to positions shown in dotted lines 427 the lines 413 shift from positions 413 to new or second positions 428, and the viewing zones move horizontally, as shown by the change in direction of the arrows from the light lines 213 through the boundaries 229 of the pixels 404 in the liquid crystal layer 417 of LCD.

The motor 419 used is ideally a stepper motor, but can also be a continuous motor with a reduction gear system which moves a shaft only a small amount per revolution of the motor armature.

The distance that the lines must shift in order for the viewing zones to follow a person's head 427 across a distance D_h is equal to $S(D_h/Z)$, where S is the distance between the light lines and the image forming pixels, D_h is the distance that the person's head moves, and Z is the distance from the person's head to the image forming pixel layer.

FIG. 26 illustrates a method of moving the line that requires moving parts. However, it is possible to perform head tracking without moving parts by using different sets of lines that turn on and off, using an illumination system similar to that shown in FIG. 33, which can form multiple sets of light emitting lines in different positions by turning lamp sets on and off as was described earlier. A head tracking system without moving parts has advantages over a moving parts system including superior ability to keep the zones positioned on the observers eyes, and superior reliability under adverse conditions such as the high gravity forces and vibrations encountered within an aircraft.

A method of doing this with two sets of lines is illustrated in FIG. 27. A surface, such as a diffuser 342, upon which two sets of light emitting lines 432 and 433 can be displayed is spaced behind LCD 401 as shown. Each set of lines can be turned on and off independently, and furthermore circuitry is provided to turn one set off whenever the other set is on and visa versa. Such independently controllable sets of light emitting lines can be formed by the lenticular lens arrangement of FIG. 33 if two independently controlled sets of lamps are used.

FIG.s 28a - 28c illustrate how the arrangement of FIG.

27 looks to the left eye of an observer sitting in front of the display. Light line set 432 is assumed to be on. As the observer moves to the right, line set 432 seems to get closer and closer to the boundary between the odd pixel columns 434 and the even pixel columns 435, as shown in FIG. 28a. At some point before the line appears to reach the boundary, line set 432 is turned off and line set 433 is turned on, as shown in FIG. 28b. Line set 433 is seen to still be well away from the pixel boundary, so the observer can continue moving to the right without crossing a zone. At some point after the line set 432 has crossed the boundary, but before line set 433 reaches the boundary, set 433 is turned off and set 432 is turned on again, as shown in FIG. 28c. Since line set 432 is now seen to be behind the even pixel columns by the left eye, the computer must simultaneously switch the left eye view image on the odd columns over to the adjacent even columns, and switch the right eye view to the odd columns. This can be accomplished by writing a new image with the right eye view on the even columns and a left eye view on the odd columns.

As the observer continues to move, it is possible to repeat the process illustrated in FIG. 26 as the lines appear to move across successive pixel columns. If the observer then moves to the left, the process is repeated in reverse.

FIG. 29 illustrates a light line illumination arrangement that can accomplish this process without an image flip when three or more lines are used. Here, three line sets 441, 442 and 443 are shown spaced on the diffuser 342 behind the LCD 401. Each set can be turned on and off independently. Furthermore, electronic means are provided to cause one set of lines to turn on at any given time.

FIG.s 30a - 30c show how the viewing zones formed by the light lines in FIG. 29 move sideways as the light lines change position. When the lines 41 are on, the central left and right viewing zones are formed in positions 444 and 445,

with the borders of the two central viewing zones defined by imaginary lines between the light lines and the boundaries 429 of the odd and even pixel columns of the light valve, as shown in FIG. 30a, according to the principles described in US-A-4,717,949. As described in that patent, there are a number of such zones spaced evenly across a plane parallel to the display. Only two are shown here for clarity. When lines 442 are on, the viewing zones move to positions 446 and 447 in FIG. 30b. When lines 443 are on, the zones move to positions 448 and 449 in FIG. 30c.

FIG.s 31a - 31c illustrate how this arrangement looks to an observer's left eye. Line set 441 is assumed to be on. As the observer moves to the right, line set 441 appears to approach the boundary between the pixel columns as shown in FIG. 31a. Before this occurs, set 41 is turned off and set 442 is turned on. As the observer continues to move, set 442 seems to approach the pixel boundary as shown in FIG. 31b. Before it crosses the boundary, set 442 is turned off and set 443 is turned on. As the observer continues to move, set 443 will eventually be seen to approach the boundary as shown in FIG. 31c. Before it crosses the boundary, set 443 is turned off and set 441 is turned back on. When set 441 is turned on again, the observer has moved so that his or her eyes are now in the two viewing zones adjacent to the central pair of zones where the observer started. This process can be repeated continuously as the observer moves, without any image flip between columns being necessary. If the observer moves to the left, the process can be repeated in reverse.

When more than three sets of light lines are used, the process is identical, with one light set coming on after its neighbor as the observer moves, except that since a larger number of light line sets with smaller space between them is used, more viewing zone positions are produced and the centers of the viewing zones can be more closely matched to the positions of the observer's eyes.

2143617

When only three sets of light lines are used, an image flip at every light line change may still be used to good effect, since it can allow the viewing zones centers to remain closer to the observer's eyes.

Use of an image flip with three lamp sets is illustrated in FIG. 32. Here, lamps 490, 491, 492 create light line sets 493, 494 495. In turn the light lines 493 shining through the LCD pixels create viewing zones 496, 497; light lines 494 create viewing zones 498, 499 and light lines 495 create viewing zones 350, 351. Each of the even numbered zones is assumed to be a left eye zone, and each of the odd numbered zones is assumed to be a right eye zone. They are marked in FIG. 32 with an "L" for left or "R" for right, respectively. Although the three sets of zones are shown to be spaced at slightly different distances from the display, this is only done to provide clarity. The horizontal lines 360, representing the ideal viewing plane where the zones are widest, are in reality coincident. The ideal viewing plane is explained in US-A-4,717,929.

When no image flip is used, the system will have to switch lamps when the observer's eyes are in regions such as region 352 where two left eye or two right eye zones overlap. These overlap regions are rather narrow. If, however, and image flip is used every time a lamp is switched, the switch can occur whenever the eyes are in wider regions 353, where left eye zones overlap with right eye zones. The overlap distance between these sets of zones is twice as large as the overlap between the others, as can be seen in the drawing.

Operation of the three lamp system with an image flip during observer movement is shown in FIG. 32. The observer's eyes are initially in zones 496, 497 and the observer is assumed to be moving left. As the eyes reach the horizontal positions 354, lamp set 490 turns off and lamp set 491 turns on, forming new zones 498 and 499. Normally, this would put the left eye in a right eye zone

and vice versa, However, simultaneously, the images switch between columns, causing zones 498 to become right eye zones and zones 499 to become left eye zones, thus keeping the right eye image visible to the right eye and the left eye image visible to the left eye.

If the observer continues to move left, to the positions 355, lamps 491 now turn off and lamps 492 come on, causing the zones to move to positions 351 and 352. Once again, an image flip occurs. If the observer still continues to move, lamp set 491 can come on again when the eyes have reached point 356. By continuously turning the lamp sets on and off in the order 490, 491, 492, 490 .... and flipping the images between columns after every lamp change, one can cause the zones to track the observers eye positions as the observer moves to the left. If the observer moves to the right, the order of turn on and turn off of the lamps is reversed, and an image flip still occurs at every lamp switch. Note that the order in which the lamps turn on is the reverse order in which they turn on when no image flip is used with the three lamp system.

In any of the previous arrangements, if the observer stops at or near the location that causes the line sets to switch, the systems just described may cause the lines sets to switch on and off and the images to flip continuously. This will likely be annoying to the viewer. To prevent this problem, hysteresis can be introduced into the control system. This is illustrated in FIG. 34.

In FIG. 34, as the observer 427 moves to the right, there will be certain points, 450 which when crossed will cause the controller to switch line sets and or flip images. The controller can be programed so that, when the observer stops and moves back to the left, the switching back to the original state does not occur until the observer gets to the points 451. Thus if the observer stops at or near any of the points 450 or 451, a single line switch and or image flip will occur, and the system will stay in that state

until the observer has moved a considerable distance one way or the other.

When the systems described above use an image flip between pixel columns, then it is desirable, when switching between one set of lamps and the next, to keep both lamps off during all or most of the short period when the pixels on the LCD are changing to flip the positions of the left and right eye images. Otherwise, a double image become visible for an instant, during the short time the pixels of the display are changing from one state to the next. If strobe lamps are used, the short time interval between lamp flashes can be timed to occur at the end of the address of the LCD, and be of such a length that the pixel complete all or most of their change by the time the next lamp flash occurs.

It is desirable in many applications to be able to switch between 3-D image display, in which each eye sees different pixels on the LCD and 2-D image display, in which both eyes see all the pixels. In a system with three or more sets of lamps, this can be accomplished simply be turning on all the lamps at once. With all the lamps on, light lines are seen behind all the pixels by each eye, and thus full resolution 2-D images can be viewed. A switch can be provided for this purpose. At one position, the switch allows only one set of lamps to be on at any given time. In the other position it turns all the lamp sets on. Note that if a large number of lamp sets are used, it is not necessary to turn on all of them in order for a light line to become visible behind every pixel. It is generally desirable, when turning on multiple lamp sets on for 2-D viewing, to turn down the power provided to each lamp, so that the overall brightness of the display remains roughly constant, even though many more lamps are on. The variable diffuser 416 of FIG.s 32 and 33 can also be used to good effect for 2-D viewing in a multiple lamp set system. If the variable diffuser is turned to its diffuse condition when multiple lamp sets are turned on for 2-D viewing, very

even illumination will result.

With any of the multiple line set or mechanically moving line set methods described above, it is possible to add a so called look around feature through the use of the proper image generating software and interface between the software and the head tracker. When the observer is in a certain position directly in font of the screen, a stereoscopic image made up of two perspective views of some scene is shown on the screen. The actual images of the scene on the display surface are two projections of the points on the imaginary 3-D objects onto the screen surface along lines running between the points in imaginary space and the observer's two eye locations. The drawing of images in this way is well known to those familiar with the art of computer graphics as applied to stereoscopic and autostereoscopic displays.

As the observer moves sideways or back and forth, the computer continuously redraws the scene so that the perspective views are drawn as projections toward the observer's new eye locations. Thus, the observer will always see perspective views of the scene that are identical to the views that would be perceived of real objects in space as viewed from the observers current location. Thus the observer will be able to move her head to look around corners or behind objects and so forth, and perhaps more importantly, will always see a 3-D image with minimal distortion. This will greatly enhance the apparent realism of the scene. Origin Instruments sells a software package that performs this function on simple images when used with their infrared head position sensing system.

In some applications, however, a different scheme would be more desirable for elimination of the distortion in the image when seen from off axis. For example, in some avionics applications the pilot sees a representation of an imaginary path in the sky to follow, which extends from near the display out to infinity. If displayed in 3-D, this path

will be seen as if through a small window at the display surface. Obviously, if the pilot moves his or her head to the side when the look around software described above is in use, all but the nearest parts of the pathway will disappear behind the edge of the window, as distant objects always do because of perspective. This would be very undesirable.

If no look around software of the type described is used, the image will stay the same on the screen and the observer will still be able to see all of it as he moves around, but it will appear to be distorted when viewed from all positions except one, as is well known to those familiar with stereoscopic display systems.

A much more desirable arrangement would be to use software that continuously redraws the image as projected to two eye points coincident with the pilot's eyes, as before, and simultaneously causes the scene image to rotate around an imaginary point at the center of the display in such a way that the same axis within the image space is always pointed at the spot between the observer's eyes. Thus, the pilot would always see an undistorted image of the pathway that seems to extend directly away into the distance, but does not become hidden behind the edges of the display. Note that with either system, the image redraws can be performed to accommodate observer movement along any direction, up and down, in and out as well as sideways, provided that the head position sensor provides information on the head position in these dimensions.

With any of the light line moving systems described above, it is desirable to provide a means by which an observer can initially position the viewing zones to center them precisely on his or her eyes when he or she is seated in the most comfortable position. This will correct for any erroneous positioning caused by variables such as posture, eye separation, echoes from headgear and the like. For this purpose, a switch may be provided, ideally located on the display case, and ideally being a spring loaded three

position rocker switch. In the left position, the switch would cause a mechanical or electro-optic optic mechanism to take the actions necessary to shift the viewing zones to the left one step at a time. In the middle position, to which the switch would return when not pressed, nothing would occur - this would be a neutral position. When pressed into the right position, the switch would cause electrical connections which caused the light line repositioning system to move the lines to the left, thus moving the viewing zones to the right one step at a time.

When multiple users are observing the display, it will be desirable to turn the head tracker off, since the tracking schemes just described can only track and follow one person's head. The zone movements necessary to track this person's head will not be appropriate for the other users, since their heads will more than likely be undergoing different motions than the tracked user. Thus a switch should be provided to turn the head tracker on and off independently of the display.

In the head tracking systems described above it is desirable, but not absolutely necessary, to coordinate the lamp turn ons and turn offs with the completion of the LCD addresses necessary to form the next image or flip images between columns. However, in the full resolution 3-D, full resolution 3-D with look around, and increased resolution 2-D embodiments, it is critical that the turn on and turn off of various lamp sets be timed precisely in relation to the address and change of the pixels on the LCD. An explanation of this timing is provided here prior to a description of how the stroboscopic versions of the present illumination system work.

The timing sequence of LCD scan (during which all pixels are addressed), pixel transmittance changes to form the next image component, and light source turn on and turn off when a small number of lamps is used for full resolution 3-D imaging as in FIG. 2 is shown in FIG.s 3a - 3c.

The timing diagram is shown in FIG.s 3a - 3c. FIG. 3a depicts the repeated address of LCD rows starting at the top row and proceeding to the bottom row. FIG. 3b shows the change from "off" or opaque state to "on" or clear state (or vice versa) of the first and the last pixels in a video field, after these pixels have been addressed, and the flashing of the first light emitting point or lamp 42 shown in FIG. 2. In the case of TFT and Ferroelectric LCDs, when a pixel is turned on during the scan of an LCD, it stays on until turned off, in this case until the scan of the entire LCD to display one video frame is completed, and the last pixels have had time to change their state.

As shown in FIG. 3a the time period between the start of one LCD scan and the start of the next is divided into three periods during which three actions occur: a first period 22 during which the LCD is scanned and its rows sequentially addressed usually starting at the top row 20 and ending at the bottom row 21 causing the pixels to change state in order to display the next image, a pause or waiting period 23 during which nothing happens, and an optional blanking period 24 of beneficial effect in some LCDs in which the LCD is scanned again and all the pixels are addressed and made to change state to either full on or full off depending on LCD configuration, to completely erase the previous image. Typically, all the pixels of a given row are addressed at the same time.

The signal to change the states of the first row pixels is given to the LCD 6 at time t_0. For illustrative purposes, it is assumed that a delay of about 3.5 ms occurs before the pixel completes its change to a new state in response to the applied signal - it begins to turn on at time t_1 and completes the change in its state between opaque and clear at time t_2 as shown in FIG. 3b. Although in FIG. 3b pixels are shown turning between full off and full on it is understood that typically some will be turning from on to off and others will turning between one intermediate gray

state and another. The last pixel starts its state change at time t_3 after it is addressed at time t_2 and completes it at time t_4. At this instant the video frame is complete and the light source 7 flashes, as shown in FIG. 3c, thus transferring the information in the first field to the observer. As seen in FIG. 3a a pause period 23 during which no addressing of the LCD happens is inserted in order to give all the pixels time to change to their new state before the lamp is fired. If the time it takes a pixel to change state is long enough, or the time required for a scan is short enough, a second scan can occur during the pause period. During the second scan the same image information is transferred to the LCD as in the first scan. The optional blanking scan can then occur followed by the next address of the LCD during which the pixels are addressed in order to create the second image field. The sequence in the second frame is the same as in the first frame except that lamp 43 flashes. Likewise, the timing of events is identical in subsequent frames, the only difference being the information written to the LCD and which of the lamps flashes.

Again as shown in FIG.s 3a - 3c, the pixels take a certain period of time to change state once they are addressed. In this case 3.5 ms is shown for illustration, that being the period typical of a custom pixel LCD being made by an LCD development lab for Dimension Technologies Inc. The time required to turn off from full on may be different than the time required for full on to full off, or the time required to change between various intermediate gray levels. In such cases, the longest time period required to change between two states is most relevant, and must be accommodated so that all pixels, regardless of which states the change to or from, can complete their change before a lamp is fired.

Lamps, of course, never flash instantaneously, but rather emit light for a short time and then turn off. The duration that the lamp is emitting light depends on the lamp, and can be controlled with some lamps, such as LEDs.

In general, the lamp should emit light only during the time period between the completion of the last pixel's change and the beginning of the next address scan. However, if a blanking scan is used, and the LCD is blanked to a dark state, the lamps may emit light during the blanking period without significant image degradation. However, if the LCD is blanked to the bright or transparent state, the lamps should stop emitting light before the blanking period begins. Otherwise, contrast will be lessened considerably.

A total of 16.7 ms has elapsed from the time the turn on signal has been applied to the first pixel to the completion of the change in state of the last pixel and flash of the light source, and blanking at all the pixels, and beginning of the next scan. Thus, there are 60 fields per second or 30 images (video frames) per second. This frame frequency will result in a nearly flickerless image in this particular configuration given typical screen sizes and brightness levels. Other configurations in which more than two sets of light lines or spots are created may require higher frame frequencies to avoid flicker. This scanning, changing, and flash sequence proceeds continuously, as subsequent image frames, each consisting of two sequential fields made visible to the observer by means of two lamp flashes, are displayed. The two image fields each consist of interleaved right and left eye members of a stereopair image as described in US-A-5,036,385.

FIG. 4 depicts the relation of the flashes of light sources 42 and 43 to the field generation on the LCD 53. As is shown, time is divided into periods numbered consecutively on the diagram starting with 1. During the odd periods, labeled 1, 3, etc., the LCD is scanned and all the rows of pixels are addressed. These correspond to the time period T_0 to T_3 in FIG.s 3a - 3c. The even periods, labeled 2, 4, etc., are waiting periods during which no addressing action is taken, and all the pixels on the LCD, including the very last ones addressed, are allowed to change to their new state after being addressed. These

periods correspond to the time period T_3 to T_4 in FIG.s 3a - 3c. The spikes represent the flashes for light sources 42,43.

The two periods are shown as being roughly equal in FIG. 4, but the wait periods can be shorter or longer than the scan periods, depending on how fast the Liquid Crystal material in the LCD can change its state. If the periods can be equal, that is, if the LC material changes state in about the same amount of time as it takes to scan the LCD, then an extra scan can be performed during the even time periods, during which the information of the previous odd field is scanned onto the LCD a second time. This will result in a slightly brighter, more uniform image with greater contrast when a conventional TFT LCD is used. The reason for this is that charge slowly leaks across an LCD pixel cell after it changes state and is waiting for the next address, causing its transmittance to drop slightly during the remainder of the scan and wait periods. A second scan will cause the pixel transmittance to stop falling and return, at least partially, to its proper value by the time the lamp flashes.

By changing the distances between the light sources 30 and the lenticular lens 32 as indicated in FIG. 5, it is possible to vary the pitch between the light lines imaged on the weakly diffusing panel 33. It is also possible to adjust the width of the left and right eye viewing zones in this manner, to match the interpupillary spacing of the observer and provide the maximum amount of lateral head movement for that observer. In this way it is possible to adjust the illumination system to the pixel geometry on an LCD. In addition, by also varying the distance between the lenticular lens 32, said diffusing panel 33, and the LCD, it is possible to vary the best viewing distance from the LCD to the observer.

A version of the illumination system of FIG. 2 is illustrated as a top view in FIG. 6. In this system instead

of two a plurality of light sources 61 through 68 are positioned such that each pair of light sources illuminates one vertical section of the lenticular lens 69. The light sources 61 through 68 can be fluorescent lamps or gas filled arc lamps, such as those filled with Xenon gas. Baffles 73 through 77 prevent light from one pair of the light sources shine on another section of the lenticular lens 69 other than the section in front of each lamp. The lenticular lens 69 images the light sources 61 through 68 on to the weakly diffusing panel 70 generating a lattice of thin, bright, vertical lines the purpose of which is as explained earlier. In this example, the column of the LCD pixels are addressed sequentially, during each field, starting with the left most column, and proceeding to the right most column.

Lamps 61, 63, 65 and 67 flash in sequence at predetermined intervals synchronized with the build up of one half of a stereopair image on the LCD 72. The first half image displayed during the first field is made up of the odd columns of the left eye image displayed on the odd columns of the LCD 72 and of the even columns of the right eye image, which are displayed on the even columns of the LCD 72, as is explained in US-A-5,036,385. After the section of the first half image in front of lamp 61 is generated, (i.e. the pixels in that section complete their change of state) light source 61 flashes, thus transferring the video information to the observer. The process is sequentially repeated by light sources 63, 65 and 67 until light source 67 flashes when the last pixel in the last section of the first half of the stereopair is addressed or changes its state. The second half of the stereo image is scanned in the same manner into the same set of pixels, thus achieving full resolution of the stereo image, and the set of light sources 62, 64, 66 and 68 flash in sequence and synchronism with the build up of the image on LCD 72 oriented as shown in FIG. 6.

The main advantage of this embodiment of this invention is that most of the wait period or pause period, where one is waiting for all the pixels, including the very last ones,

to complete their change is shortened. Each of the smaller sections is illuminated as soon as the pixels within that section complete their change, which may occur while another part of the LCD is still being addressed. Indeed, if the pixels can complete their change in a period of time less that the interval between the address of the last column of their section and the next address of the first column of their section, the LCD can be addressed continuously, without any pause period between fields.

Although FIG. 6 shows eight light sources, it is understood that any number of light sources, constrained in their number only by the physical dimensions of the display and the dimensions of the light sources themselves, could be used in this illumination scheme.

Given the arrangement of FIG. 6, the lamps do not necessarily have to flash in a very short interval. They can remain on for the duration of the period between the time when the pixels of the last addressed column of section in front of them complete their change to the time when the pixels in the first addressed column are addressed again during the next scan.

It is possible to use essentially the same illumination system and timing sequence, as explained above, to generate 2-D images with resolution several times that of the pixel resolution of the LCD, given appropriate optics and light source configurations already known to those skilled in the art.

The forgoing diagram and explanation has used the case of an autostereoscopic full resolution display for illustrative purposes. This type of display requires two sets of interleaved light lines, each set positioned halfway between the member of the other set. The display generates two full resolution images, forming a stereo pair, that are visible from a series of left and right eye viewing zones spaced across a viewing region in front of the display.

US-A-5,036,385 also describes a multiple perspective view full resolution display providing a look around effect, which generates several different full resolution perspective views of a scene, each of which is visible from within a different viewing zone, several of which are spaced across a viewing area in front of the display. This type of display relies on multiple sets of flashing light lines.

As an example, the arrangement and flashing sequence of FIG. 6 can be used to generate four sets of light lines for a four zone display if a total of 16 lamps were used instead of 8. The lamps are shown in FIG. 6A. Lamps 101, 105, 109, and 111 flash on as the first of four images (consisting of interleaved parts of four perspective views, as described in US-A-5,036,385) is built up on the LCD. Next lamps 102, 106, 110, and 114 would flash on in sequence as the next image is built up, then lamps 103, 107 111, and 115, would flash on as the third image is built up, then lamps 104, 108, 112, and 116 would flash on as the fourth image is built up.

As shown in FIG. 7 said LCD 72 is rotated 90 degrees against its commonly used orientation, i.e., its long dimension is vertical. This is called the "portrait format", and is useful in many applications. Because of this orientation the rows of pixels are used as columns and the columns are used as rows. The reason for this format is that all commonly available LCD drive circuits are designed to scan the LCD in a raster format, row-by-row; this configuration, consequently, takes advantage of this process.

Similar illumination systems can be used in a configuration of autostereoscopic and enhanced resolution 2-D displays in which the longer side of the LCD is horizontal, the so-called "landscape" format. Such a system is depicted in FIG. 8. A plurality of light sources 81 - 88 and 91, 92, etc. are also used in this scheme. However, in contrast to the illumination system described with reference to FIG. 6, light sources 81 - 88 do not extend over the

entire height of the display, but are divided into vertical sections of equal heights. While FIG. 8 shows two such sections 81 - 88 it is understood that more than two sections could be used, constrained in their number only by the physical dimensions of the display and the physical dimension of the light sources. Said light sources can be fluorescent lamps or gas filled arc lamps, such as those filled with Xenon gas, operating in stroboscopic mode. Arrays of small lamps such as LEDs can be used to good effect, as can addressable flat panel emissive displays such as EL and plasma displays.

This illumination system operates as follows: the first half image is progressively scanned in on the LCD 95 starting with the top (first) row until in this case, the scan of the upper half of the LCD 95 screen is completed and the pixels in the upper half have made their change to form the image (the scan, meanwhile, can continue through the lower half of the LCD). At this instant light sources 81, 83, 85 and 87 flash, thus transferring the video information on the top half of the screen to the observer. The scan of the LCD 95 proceeds until the lower half of the screen is completed. As soon as the pixels on the lower half complete their change, the lower set of light sources 91, etc., is triggered to flash, causing the video information on the LCD 95 screen to be transferred to the observer. Now, the process is repeated in the identical manner for the next interleaved half image, using first the light sources 92, 94, 96, 98, then the light sources 92, etc., in this manner transferring the remainder of the image to the observer, and thus, because of the vision phenomenon of image retention, generating the illusion of a non-flickering full resolution three-dimensional image.

While the pixels of the lower half of the first half image are being allowed to change their state, the upper half of the next half image can begin to be scanned in. Again, if the pixels change their state fast enough so that all the pixels in each half have completed their change

before the scan of the other half is complete, the LCD can be scanned continuously and no pause period will be required.

Lenticular lens 93 generates images of vertical light lines on the weak diffusing panel 94. In the configuration illustrated in FIG. 8 the light lines are about one half the height of the LCD 95. The height of the light lines in a particular display configuration depends on the number of sets of light sources, and thus the number of rows of light sources. Likewise, any number of columns might be used. The number of columns would be constrained only by the width of the lamps and the required width of the illuminating area.

This illumination system with different lamps and optics can be also used to generate enhanced resolution 2-D images by successively illuminating different subsections of the LCD, as described above. As an example of the 2-D case, FIG. 15 illustrates a lighting arrangement that could be used to increase the resolution of an LCD by a factor of 4, according to the principles explained in US-A-5,036,385.

FIG. 15 shows a configuration using an array 230 of a large number of light sources placed at a shorter distance behind the fly's eye lens sheet 211 and LCD 206. FIG.s 16a -16c is a timing diagram showing how lamps in different rows of the array are turned on and off in synchronization with LCD scans and pixel changes.

The array shown in FIG. 15 has 8 rows of light source groups 231 -238. Each group consists of four light sources 239 - 242. Each row of light source groups illuminates a horizontal section of the LCD 243 - 250 of roughly 1/8th the LCD's height. The LCD is assumed to be addressed row by row, starting from the top, as is typical of LCDs. Since each light source only illuminates a 1/8th horizontal section of the LCD, one must wait only for the pixels in a given 1/8th section to be addressed and complete their change before turning on the lamps behind it.

For example, in FIG.s 16a, 16b the address and pixel response of the last rows of sections 243 - 250 are shown. Again, the LCD is operated at 120 times per second, and the pixels take 3.5 ms to respond. As soon as the pixels of the last row of section one are through changing, the lamps marked 239 in the row of lamp groups 231 in FIG. 15 are turned on. Their brightness curve 231 is shown in FIG. 16c. They may remain on until the first rows of section 243 are addressed again, and start changing. FIG. 16c shows the lamps turning off at this point in time. The light from these lamps is imaged by the fly's eye lens into the upper left quadrants of each pixel. Likewise, as soon as the pixels of section 44 are through changing, the lamps 239 of row 232 are turned on. These, likewise do not turn off until the first row of section 44 is addressed again. The address and turn on sequence continues for section 245 - 250.

After the last section 250 is addressed, the scan can immediately proceed to address the LCD again, starting at the top. The lamps behind section 243, of course, will ideally turn off before the next scan of section 243 begins. After the first section 243 is addressed again, and its pixels have had a chance to change, lamps 240 in row 231 are turned on, providing illumination to the upper right hand quadrants of the LCD pixels of section 243. The remaining lamps 240 of rows 232 - 238 turn on in succession, as the pixels of the sections 244 - 250 in front of them complete their change to a new transparency state.

Likewise, on the next scan in the sequence, lamps 241 flash on and off, and then on the next scan after that the lamps 242 flash on and off. Thus, within four scans, a complete high resolution image is presented to the observer. During the next four scans, the next frame of the high resolution image is created in the same way using the same scan and lamp flash timing sequence shown in FIG.s 16a - 16c.

Although FIG. 15 shows four sets of light sources arranged in groups of four lamps each, it is understood that any number of light sources or groups of light sources, constrained in their number only by the physical dimensions of the display, the dimensions of the light sources themselves, and the address and pixel response speed of the LCD, could be used in this illumination scheme.

For the look around case, more lamp sets would again have to be used. A lamp arrangement capable of producing four sets of light lines is illustrated in FIG. 8A. The lamps are arranged in 16 columns of two lamps each. Here the top members of lamp columns 121, 125, 129, and 133 would flash on all at the same time after the top half of the first image had formed, and then the bottom members of lamp columns 121, 125, 129, and 133 would flash on when the bottom half of that image had formed. Likewise with the top and bottom members of lamp columns 122, 126, 130, and 134 would flash on as the second part of the image was formed, then the top and bottom members of lamps 123, 127, 131, and 135 as the third image was formed and finally the top and bottom members of lamp columns 124, 128, 132, and 136.

The image formation concepts, as explained with reference to FIG.s 2 through 8, can be implemented in a display configuration illustrated schematically in FIG. 9. The illumination system in this configuration does not employ flashing light sources; rather, the light sources 101 through 109 mounted on the base 100 are constantly lit. Such light sources, could be, preferably, fluorescent lamps. The light from said light sources is diffused by the strong diffuser 110 to produce homogeneous illumination of the electro-optical shutter array 111 preferably employing fast acting liquid crystal valves.

At the present time, typical shutters of this type will have low contrast when viewed from off angle. This means that when in the off state they do not efficiently block light that is passing though them at various high off axis

angles. Baffles, similar to those shown in FIG. 2, and be employed to block this light and prevent it from scattering within the system and causing ghost images to be visible.

It is generally desirable, when the shutters employed are LC devices that require front and rear polarizers, to use linear polarizers whose polarization angles whose directions of polarization are in the vertical and horizontal directions. In that configuration, light blockage tends be most efficient at angles far from normal in both the vertical and horizontal directions, allowing the display to be viewed from far off axis in these directions without ghost images becoming a problem. It is desirable, of course, to also make the polarization directions of the front shutter polarizer and the rear LCD polarizer to be parallel, thus maximizing light transmission. It is also desirable, if the rear polarizer of the LCD is of optimal type for use with the shutter LC material, and if its polarization direction is vertical or horizontal, to leave off the front polarizer from the shutter, and simply rely on the LC rear polarizer to perform the light blocking function in the shutter off state. This results in slightly greater light transmission in the on state.

The on-off, i.e. clear and opaque, states of the individual shutters 115 through 124 etc., 131, 132 etc. of the electro-optical shutter array 111 illustrated in FIG. 9 are controlled in synchronism with the scanning of the LCD 114 and are turned on in a sequence, similarly to the sequence of light sources flashes in the display shown in FIG. 8. As scanning and pixel change on the LCD 114 proceeds from top to bottom, and completes 1/3 of the LCD's height, light shutters 115, 117, 119 and 121 are turned on momentarily allowing the light to pass to the lenticular lens 112 which generate the first set of light lines on the diffusing panel 113 and, consequently transfers the first part of the interleaved image to the observer. Next the second third of the one half of the image is scanned in and light shutters 123, etc. are turned on when this part of the

image is scanned in, followed by the last third of the image.

While the pixels in the last third of the first half image are changing their state, the first third of the next half image can be being scanned into the upper third of the LCD 114 and transferred to the observer by momentarily turning on the shutters 115, 117, 119, 121. In this manner fast and efficient transfer of video information is achieved.

FIG. 10 depicts yet another illumination system for autostereoscopic and enhanced resolution 2-D displays. In this system a high intensity projection type CRT 190 is used to generate patterns of light lines or points in synchronism and an appropriate sequence with the scanning on the LCD 193. The light lines are projected onto a strong diffusing panel 192 by the focussing lens 191. The sequence of LCD scanning and light line generation can be as described with reference to the description of the illumination systems of FIG.s 2, 5, 7, 8 and 9, or another suitable sequence where the lines or points projected on to the diffuser 192 replace the lamps indicated in the figures. Stereoscopic or enhanced resolution 2-D images are generated as already described.

The system shown in FIG. 11 makes use of an electroluminescent or plasma panel 194 which has a predetermined pattern of addressable lines or pixels that are actuated in an appropriate sequence in synchronism with the scanning of the LCD 197. In some cases, customized EL or plasma displays of the type normally used for information display can be employed. As in previously described systems, a lenticular or fly's eye lens 195 images lines or points generated on the panels onto the weakly diffusing panel 196, and the stereoscopic or enhanced resolution 2-D images are produced as described above.

Yet another method of creating the illumination required for generation of stereoscopic or enhanced

resolution 2-D images can take advantage of light emitting diodes (LEDs) as light sources. Such devices are increasingly commercially available in a variety of colors and with high brightness. FIG. 12 shows one version of a display utilizing LEDs.

A two-dimensional array 140 is comprised of a large plurality of LEDs 144, 145, 146 etc. Such LEDs can all be of one color, say, green, for monochromatic displays, or can be a set of three primary colors, red, blue and green, for color displays.

Since the brightness of blue LEDs is not as high as that of red and green devices, a greater number of blue LEDs could be used in each LED cluster in the LED array 140.

The LEDs can be discrete packaged devices mounted in a array on a base, or chips mounted on a suitable substrate.

The LEDs individually or in light-pattern on color generating sets are turned on and off in synchronism with the scanning of the LCD 143. The light generated by said LEDs is focused by the lenticular lens 141 onto the weakly diffusing panel 142 to form the light lines or points necessary for observation of stereoscopic or enhanced resolution images on the LCD 143.

For color displays, a sequence of red, blue and green components of the images can be generated on a monochrome LCD which are fused by the vision of the observer in to a color image, as described in US-A-5,040,878. As an example an optical configuration of an LED-based color illumination system for 2-D displays is depicted in FIG. 13 which shows a much enlarged partial perspective view of said system. Here also a monochromatic (black and white) LCD is utilized. As in the system explained with reference to FIG. 12, LED's which emit light of at least three primary colors are used. Such LEDs can be, for example, 174 (red), 175 (green), 176 and 177 (blue) (two blue LEDs to compensate for

2143617

lower light output). Said LEDs direct its light output toward a fly's eye lens 178 which comprises a 2-D array of very small convex lenslets, such as lenslets 179 and 180. The number of said lenslets in said fly's eye lens 178 is equal to the number of pixels in the LCD 181. Hence, each lenslet focuses the light to one pixel in the LCD 181. When the pixels are in their on (clear) state (e.g. pixels 182 and 183) they transmit the light from the lenslets to a diffusing panel 184 where this light form color dots, such as 185 and 186. In this manner images can be formed on the diffusing plate 184. In order to achieve color in this display, red, blue and green constituent color images are displayed in a rapid sequence using the same pixels and the corresponding lenslets, by appropriately turning on and off sequentially sets of all LEDs of the same color, while scanning in into the LCD the corresponding constituent image.

Monochromatic LCDs can also be used in conjunction with other color light sources, such as fluorescent or gas filled plasma discharge lamps to generate color stereoscopic or enhanced resolution 2-D images. One embodiment of this scheme is illustrated in FIG. 14.

FIG. 14 depicts the top view of an autostereoscopic or an enhanced resolution 2-D display. Light sources 156 through 167 are mounted on the base 150. There are three sets each of four light sources; red 156 - 159, green 160 - 163, and blue 164 - 167. It is understood that the number of sets of light sources is not limited to four; such number will be only constrained by the physical dimensions of the display and the dimensions of the light sources. Fluorescent and gas filled plasma discharge lamps in three primary colors are readily commercially available.

The red, green and blue repeating flashing sequence, will, however, lead to the same type of image breakup phenomena seen in other field sequential color displays. It would also necessitate a much faster address speed and pixel

response speeds for the LCD, as is the case with existing field sequential color systems. This is because in order to avoid flicker one would have to create a compete image every 1/60th as opposed to 1/30th second, as is the case with other field sequential color systems that illuminate the whole LCD first with red, then green, then blue light. That means that the LCD must be capable of generating 180 completely different images every second, so that, a red, a green, and a blue image component are presented every 1/60th second.

The illumination sequence used to overcome the image breakup phenomena relies on the ability of this invention's field sequential color illumination system to multiplex the illumination spatially as well as temporally. This ability should also allow one to operate the LCD and illumination system at much lower speeds - possibly as low as 30 complete images per second - without flicker becoming visible. The reason for this is that a line interlaced image can be created in which members of a set of three lines of red, green, and blue image elements is flashed sequentially.

Long ago, researchers discovered that cathode ray tubes (CRT) could be operated at 30 frames per second, instead of 60, without objectionable flicker, if an interlaced scanning system were used. In this scheme, which is used in ordinary home television sets, every other row is scanned in 1/60th second, and the remaining rows are scanned during the next 1/60th second. A complete image is built up in 1/30th second. This system allows flicker-free imaging at lower speeds because, although it takes 1/30th second for a full image to be built up, the eye still sees the screen filled with light during each 1/60th second interval. During successive intervals, the scan lines are shifting by a barely detectable amount.

This invention's system can achieve an interlace effect with field sequential color illumination. The system does this by focusing the red, green, and blue light into

PCT/US 93/08412
46 Rec'd PCT/PTC 05 JAN 1995

sequentially illuminated color spots or lines within the pixel boundaries. These lines, or rows of color spots, can be spatially and temporally interlaced in a manner similar to the scan lines of a CRT. The main difference is that to achieve the same resolution possible with other field sequential color systems, the interlace must be 3:1 instead of 2:1.

FIG. 17 shows one of several interlace configurations that can be generated with this type of optics. This particular pattern is closest to the typical CRT row interlace scheme and therefore good for illustrative purposes. The figure shows a magnified view of two representative rows of pixels on an LCD. During the first 1/90th second, the LCD is scanned and the pixels in columns 260, 263, 266, etc., are made to change their transparency to display part of the red component of an image. Pixels in columns 261, 264, 267, etc., are made to change their transparency to display part of the green component of an image, and pixels in columns 262, 265, 268, etc., are changed to display parts of the blue component of an image.

At the end of the 1/90th second period, when the pixels have had a chance to change, strobed illumination is focused into individual red, green, and blue light spots within the top third of each pixel 269.

During the second 1/90th second time period, the pixels of columns 260, 263, 266, etc., are changed to display another row of the red component of an image, the pixels of columns 261, 264, 267, etc., are changed to display the next row of the green component of the image, and columns 262, 265, 268, etc., are changed to display another row of the blue component of the image. At the end of this second 1/90th second interval, light is focused into a second row of spots 270 in the middle of each pixel.

During the last 1/90th second interval, the pixels once

again change to display the remainder of the image, and strobed light would be focused into a new rows of spots 271 in the bottom third of each pixel.

Note that in this case each group of three red, green, and blue spots in each row is being used as a complete image pixel, in a manner similar to a typical color LCD with color filter stripes.

Note again the visual effect here would be similar to that seen on an interlaced CRT, except that instead of two sets of interlaced horizontal rows appearing sequentially, three rows would be used. With regard to flicker it is believed the results will not be significantly different from what is seen on a normal interlaced CRT with low persistence phosphors.

In this example, if the LCD had a pixel resolution of M (horizontal) by N (vertical), the resolution of the image would be M/3 x 3N - the total number of pixels would be the same in image and LCD, but the ratio of horizontal to vertical resolution would be different. It would be best in such a case to start out with pixels that had a high ratio (as shown) between their vertical and horizontal dimensions.

Another option, achieved by changing the way the data is placed on the LCD, is to let each pixel on the LCD to represent a pixel on the image. In such a case each pixel would represent one element of a M x N image, and would change its transmittance to reflect the intensity of red, green, and blue light at that point as the red, green, and blue light illuminated subregions of it.

It is not necessary for the red, green, and blue illuminating spots to be created in straight rows and columns. It is suspected that randomizing their placement to some degree would tend to improve performance with regard to image breakup even further. FIG. 19 shows such a randomized pattern and illuminating sequence. Rows 269,

05 JUN 1995

270, and 271 are illuminated sequentially as described above, but note that the red, green, and blue areas are not in the same left right sequence in the three sets of rows.

FIG. 18 shows the type of illumination array 257 and fly's eye lens 258 arrangement that could be used to generate the light patterns shown in FIG. 17. FIG. 20 shows the type of illumination array 257 and lens 258 that can be used to generate the light patterns shown in FIG. 19. A fly's eye lenslet is configured so that each lenslet is situated behind a group of pixels where the entire repeating pattern is to be focused. For example, if the pattern repeats in every group of three pixels, as in FIG. 18, lenslets of roughly the same size as a group of three pixels must be used, and placed behind every group of three.

Arrays of red, green, and blue lights on the illuminator would be arranged in the same repeating pattern, except that the pattern would be inverted, as shown, relative to the patterns focused into the pixels, because of the inversion created by the lenses. The illuminating regions on the array and the lenslets would have the proper spacing and dimensions so that the lenses created images of the illuminating regions in the correct sections of the correct pixels.

As before, the elements of each set on the illuminator could be made to turn on and off sequentially from top to bottom, following the scan of the LCD. If the illumination of FIG. 18 had 8 rows of 3 x 3 patterns, 8 sections of the LCD would be illuminated sequentially. In the figure, the lamps 280, 281, 282 would turn on during the first scan, to illuminate the bottom 1/3 of each pixel. Lamps 283, 284, 285 would turn on during the next scan to illuminate the middle third of each pixel, and lamps 286, 287, 288 would turn on to illuminate the top third of each pixel.

Note that it is not necessary to illuminate the pixels sequentially by rows. It is also theoretically possible to

illuminate light spots in different rows in different pixels at the same time. For example, in FIG. 20, one could illuminate first the areas 290, 291, and 298 at the same time, then the areas 293, 294 and 292 and next the areas 296, 297, and 295. The only requirement is that during any given illumination period, red, green, and blue illumination is on, and during each three period cycle all the areas within all the pixels are illuminated.

Although three rows of illuminated sub regions of each pixel are shown in FIG.s 17 and 19, that number can be greater than three. By using greater numbers of subregions, the color image created can posses a resolution greater than the pixel resolution of the LCD. FIG. 21 is a diagram showing six lines of subregions 300 - 305 within each pixel which are illuminated sequentially, starting rows 300 and proceeding through rows 305. Given an LCD with N x N resolution, this arrangement would produce a color image with N x 2N resolution.

Of course, if more subregions are used, a faster LCD must be used to avoid flicker, since more image sub components must be illuminated sequentially during the 1/30th second period. It is suspected, also, that as the number of subregions in each pixel increases, the overall frame speed, the time in which an entire image is built up, must be shortened. At the extreme end, a very large number of sequentially illuminated sub regions within large pixels may require a frame speed of around 1/60th second, since the visual impact will start to approach that of a non-interlaced CRT, which has to be operated at 60 fps to avoid flicker.

FIG.s 19 and 21 show 3 x 3 patterns of illuminated subregions of pixels. However, larger or smaller patterns can be used. FIG. 22, for example, shows a six by six pattern that can be repeated within groups of 6 x 6/3 = 6 x 2 pixels. One such group of pixels is encircled by the dotted line in FIG. 22.

In some situations, it may be desirable to use an illuminator consisting of a one dimensional array of linear light sources. The most common type of illumination used for LCDs, namely fluorescent tubes, are most often configured as long, thin tubes and cannot be made as small point like sources. Fluorescent tubes that emit red, green, and blue light can be made and easily mounted next to one another in banks. They can also be made to emit light in short bursts.

In the case of linear light sources, operating behind a typical LCD, it is best to mount them horizontally so that the members of each set can flash sequentially from top to bottom, following the scan of the LCD rows in front of it. Of course, if the LCD is scanned from side to side column by column, then the tubes should be mounted vertically.

An interlace pattern that can be produced with linear light sources and its illumination sequence are shown in FIG. 23. Red, blue and green horizontal lines are projected into each row of pixels as shown.

At the end of the first scan, after the pixels have been allowed to change to a new desired state, all the lines 310 are flashed simultaneously into the pixels. Thus, a red line is flashed into rows of pixels 320, a green line is flashed into rows of pixels 321 and a blue line is flashed into rows 322. Note that the RGB lines appear in different positions within the pixels. The pixels of rows 320 are, of course, in the appropriate states of transparency to form the red component of those rows of an image, correspondingly, the rows of pixels 321 are controlled to form the green component in those rows, and the rows of pixels 322 form rows of the blue component of the image.

After the LCD has been re-scanned and the pixels allowed to change their state again, a green line is flashed into the rows of pixels 320, a blue line into rows 321, and

a red line into pixel rows 322. Again, pixels in each given row have the states appropriate to the color appearing in them. At the end of the next scan, after a new partial image has been generated on the LCD, a blue line is flashed into the pixel rows 320, a red line into the pixel rows 321, and a green line into the pixel rows 322.

The result is a full resolution, full color image in which the color lines are spatially interlaced.

FIG. 24, a side view, shows the lamp and lens arrangement that can be used to generate the line pattern and sequence of FIG. 23. A bank of linear lamps is mounted with red, green, and blue light emitting members placed vertically in the order shown. A lens sheet is mounted behind the LCD 206 as before, with its lenslets ideally of about one focal length away from the pixel layer. When using linear light sources, one has the option of using a lenticular lens 329 in place of the fly's eye lens discussed previously. A lenticular lens 329is generally easier and less costly to make than a fly's eye lens of the same size. The lenticular lens would possess an array of cylindrical lenslets spaced across its surface, parallel to the length of the linear light sources. Such a lens is shown in FIG. 24.

In either case, each lens must image light into three pixels, although in some configurations the lens may image light into more than three pixels. The lenses and the light sources must be of the correct size and spacing relative to one another so that each lens images light from each set of red, green, and blue lamps into the correct pixels.

The lamps are turned on in the following order in succession, as soon the section of the LCD in front of them has been addressed and its pixels have completed its change to their required states. Each lamp turns off a certain time period after turn on, so that it is completely off by the time the next address occurs. The lamps 330 turn at the

same time to form the first set of light lines 310. Lamps 331 turn on after the next scan and pixel change to form the lines 311. Lamps 332 turn on at the same time to form lines 312.

As can be seen from the previous discussion, there are many types of spatial patterns and temporal illumination sequences that can be generated using the type of illumination systems and timing just described. The present application should be understood to encompass these other arrangements.

Various types of flashing light sources can be used to provide illumination for the displays of this invention including fluorescent lamps, gas filled arc lamps, gas filled plasma discharge devices, light emitting diodes, electroluminescent devices, electron excited phosphor displays such as cathode ray tubes, plasma displays, fluorescent displays and various steady light sources with light transmission controlling means such as arrays of liquid crystal light valves placed in front of them.

The forgoing description has been for the purpose of illustration and not limitation. Many other modifications and ramifications will naturally suggest themselves to those skilled in the art based on this disclosure. These are intended to be comprehended within the scope of this invention.

CLAIMS

1. An improved illumination system for high resolution displays, comprising a linear or point like light source, an electronic means for controlling the on and off states of said light source in synchronization with the process of image generation on an electronically controllable light valve array, optical focusing means spaced apart from and in front of said light source so as to focus the light into patterns of lines, line segments, or point like areas in a plane substantially adjacent to the light valve array, said focusing light patterns illuminating selected portions of the light valve array.

2. The illumination system of claim 1 in which the linear or point like light source comprises a plurality of light sources.

3. The illumination system of claim 2 in which the light sources and optical focusing means are positioned with respect to one another and the light valve array in such a way as to create rapidly blinking sets of lines or points of light for the purpose of creating high resolution 3-D images.

4. The illumination system of claim 2 in which the light source and optical focusing means are positioned with respect to one another and the light valve array so as to focus rapidly blinking sets of lines or points of light close to or within the pixel layer of the array so as to create 2-D images with a resolution exceeding the pixel resolution of the light valve array.

5. The illumination system of claim 2 in which mechanical means is provided for adjusting the position of said light sources in relation to each other and in relation to the optical focusing means.

6. The illumination system of claim 2 having means for repeatedly addressing the light valve array in row by row or column by column fashion, there being a finite time period between the address of any individual light valve (pixel) and the time that the valve has completed its change in transparency as a result of the address; further having means for timing the light source to turn on during the period between the time when the pixels that are in a section of the array generally in front of it have started their change in transparency, and the time when the pixels in said section are addressed again, the light source being turned off outside of these time periods.

7. The illumination system of claim 6 in which baffling means is provided between the light source and the optical focusing means so as to allow the light source to illuminate only the section of the light valve that is generally in front of it.

8. The illumination system of claim 6 in which said light source is a cathode ray tube.

9. The illumination system of claim 6 in which said light source is a plasma display.

10. The illumination system of claim 6 in which said light source is an electro-luminescent means.

11. The illumination system of claim 2 in which the light sources are comprised of steady light emanating means and further comprising light transmission controlling means placed between the light sources and the observer to achieve a stroboscopic effect.

12. The illumination system of claim 11 in which said light transmission controlling means is an array of light valves.

13. The illumination system of claim 12 in which said array of light valves are electrically controlled liquid crystal devices.

14. The illumination system of claim 2 which includes an electrically controlled light diffusing means placed between the light source and the optical focusing means, said diffusing means being capable of changing between a clear, transparent state and a light scattering, diffuse state under control of the user.

15. The illumination system of claim 14 further comprising optical antireflection means on surfaces of at least one of the optical focusing means, the electrically controlled light diffusing means and between transparent components of different indices of refraction, or on surfaces between transparent components and air, so as to reduce reflections at these surfaces.

16. The illumination system of claim 2 which includes a passive light diffusing means between the light source and a plane upon which the optical focusing means focuses the light and creates the light patterns.

17. The illumination system of claim 16 in which the light diffusing means comprises a substrate and a diffusing material bonded to a surface of the substrate.

18. The illumination system of claim 17 in which the substrate comprises one or more sheets of transparent material, said sheets being mounted in contact with the rear most surface of the light valve on the side facing away from the observer.

19. The illumination system of claim 18 further comprising optical antireflection means on surfaces of the light diffusing means and the transparent sheets of the substrate and between transparent components of different indices of

refraction, or on surfaces between transparent components and air, so as to reduce reflections at these surfaces.

20. The illumination system of claim 2 in which the light sources comprise fluorescent lamps.

21. The illumination system of claim 2 in which the light sources comprise gas filled arc lamps.

22. The illumination system of claim 2 in which the light sources comprise gas filled plasma discharge lamps.

23. The illumination system of claim 2 in which the light sources comprise light emitting diodes.

24. The illumination system of claim 2 in which said light sources generate light of one color.

25. The illumination system of claim 2 in which said light sources generate light of a plurality of colors.

26. The illumination system of claim 2 in which said light sources are of at least three different types, each type capable of emitting light of a different color.

27. The illumination system of claim 2 in which said light sources emit red, green, and blue light.

28. The illumination system of claim 1 in which the optical focusing means comprises a lenticular lens sheet.

29. The illumination system of claim 1 in which the optical focusing means comprises a fly's eye lens sheet.

30. An improved illumination system for an autostereoscopic display comprising a point like or linear light source and optical focusing means spaced apart from and in front of said light source so as to focus the light into arrays of lines, line segments, or point like areas on

a plane substantially adjacent a light valve array, said focusing light patterns illuminating selected portions of the light valve array.

31. The illumination system of claim 30 in which said light source is a cathode ray tube.

32. The illumination system of claim 30 in which said light source is an electro-luminescent device.

33. The illumination system of claim 30 in which the optical focusing means comprises a fly's eye lens sheet.

34. The illumination system of claim 30 in which the optical focusing means comprises a lenticular lens sheet.

35. The illumination system of claim 30 in which the linear or point like light source comprises a plurality of light sources.

36. The illumination system of claim 32 which includes a passive light diffusing means adjacent the optical focusing means upon which the optical focusing means focuses the light and creates the light patterns.

37. The illumination system of claim 36 in which the passive light diffusing means comprises a substrate and a diffusing material bonded to a surface of the substrate.

38. The illumination system of claim 37 in which the substrate comprises one or more sheets of transparent material, said sheets being mounted in contact with the rear most surface of the light valve on the side facing away from the observer.

39. The illumination system of claim 38 further comprising optical antireflection means on surfaces of at least one of the passive light diffusing means including the sheets of

transparent material of the substrate and the optical focusing means and between transparent components of different indices of refraction, or on surfaces between transparent components and air, so as to reduce reflections at these surfaces.

40. The illumination system of claim 32 including a non reflective, opaque barrier adjacent said light sources, configured in such a way as to prevent light from passing through it except at the light source locations.

41. The illumination system of claim 32 in which mechanical means is provided for adjusting the position of said light sources in relation to each other and in relation to the optical focusing means.

42. The illumination system of claim 32 in which baffling means is provided between the light sources and the optical focusing means so as to allow each light source to illuminate only the section of the light valve that is generally in front of it.

43. The illumination system of claim 32 in which the light sources comprise fluorescent lamps.

44. The illumination system of claim 32 which includes a passive light diffusing means located between the light source and the optical focusing means.

45. The illumination system of claim 32 in which the light sources comprise light emitting diodes.

46. The illumination system of claim 32 in which the light sources comprise gas filled plasma discharge lamps.

47. The illumination system of claim 32 in which the light sources comprise gas filled arc lamps.

48. The illumination system of claim 32 which includes an electrically controlled light diffusing means placed between the light sources and the optical focusing means, said diffusing means being capable of changing between a clear, transparent state and a light scattering, diffuse state under control of the user.

49. The illumination system of claim 48 further comprising optical antireflection means on surfaces of at least one of the electrically controlled light diffusing means, the optical focusing means and between transparent components of different indices of refraction, or on surfaces between transparent components and air, so as to reduce reflections at these surfaces.

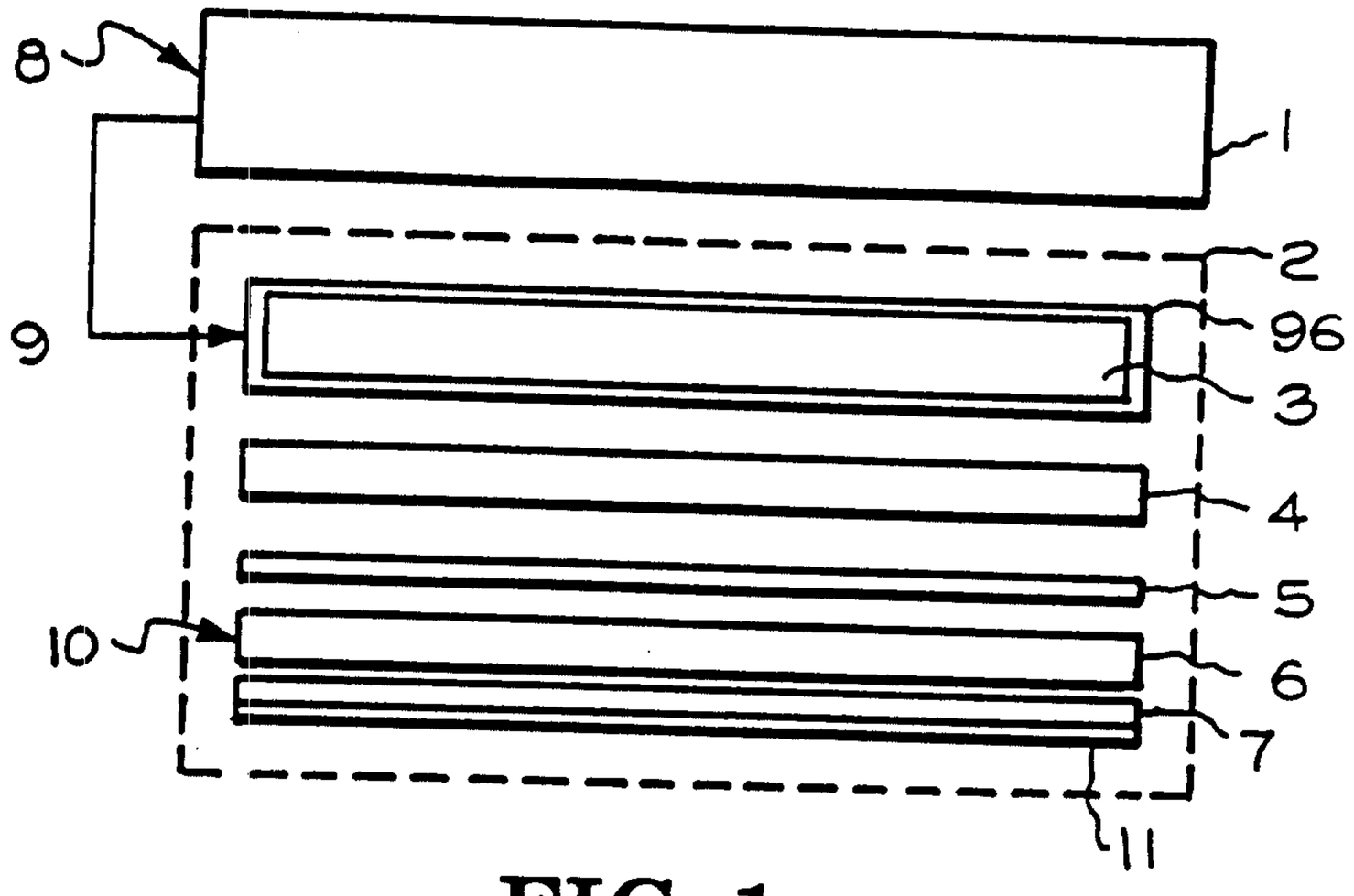
8
1
2
96
3
4
5
6
7
9
10
11

FIG. 1

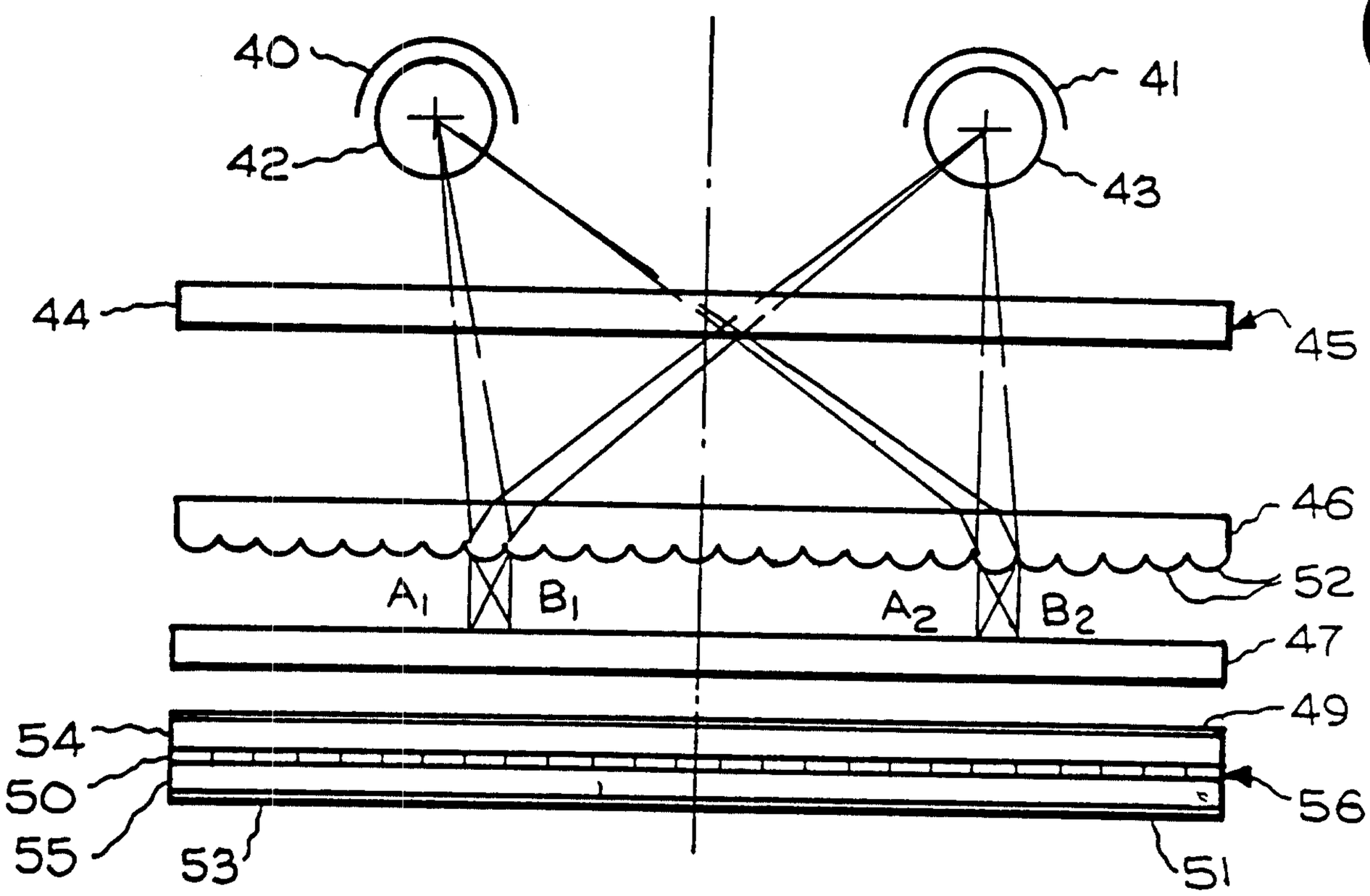
40
41
42
43
44
45
46
52
A1
B1
A2
B2
47
49
54
50
55
53
56
51

FIG. 2

PCT/US93/08412

46 Rec'd PCT/PTO 05 JAN 1995

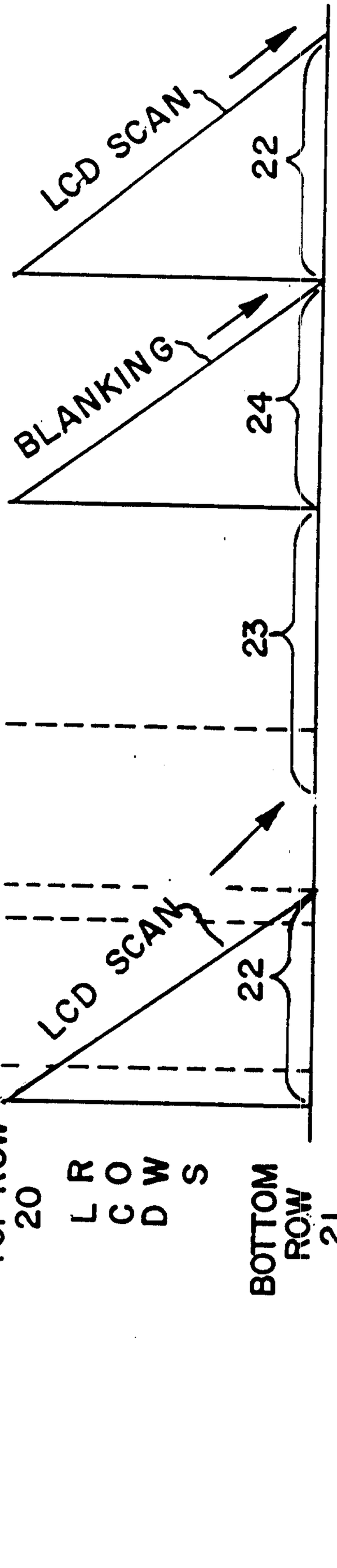

FIG. 3a

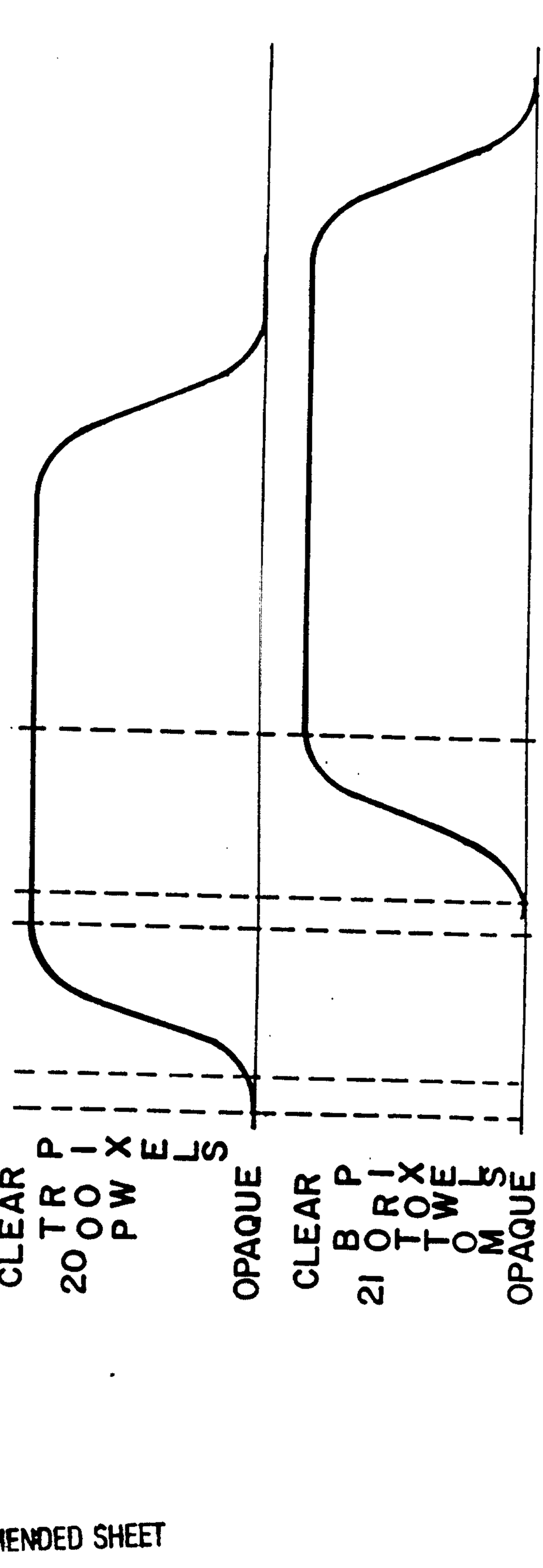

FIG. 3b

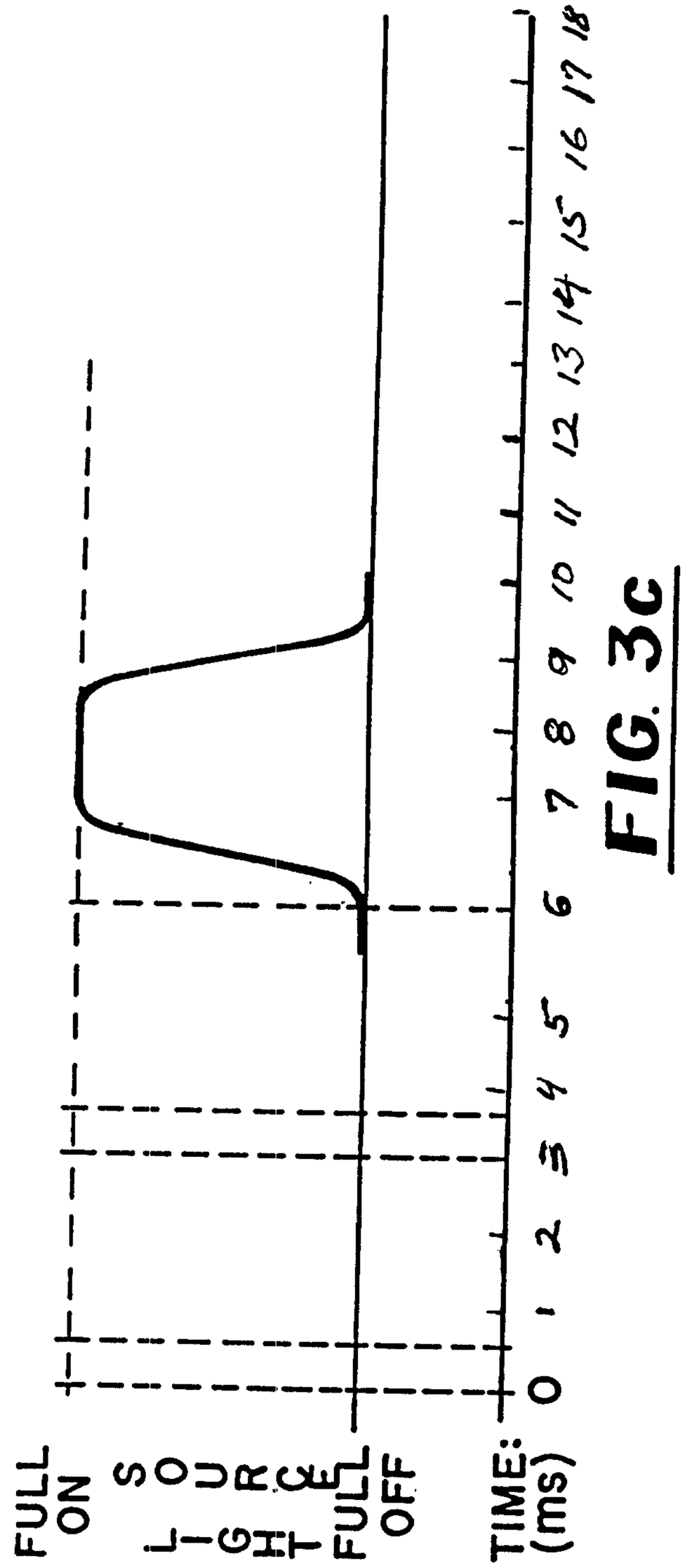
FULL ON
SOURCE LIGHT
FULL OFF
TIME (ms)
0 1 2 3 4 5
6 7 8 9 10 11 12 13 14 15 16 17 18

FIG. 3c

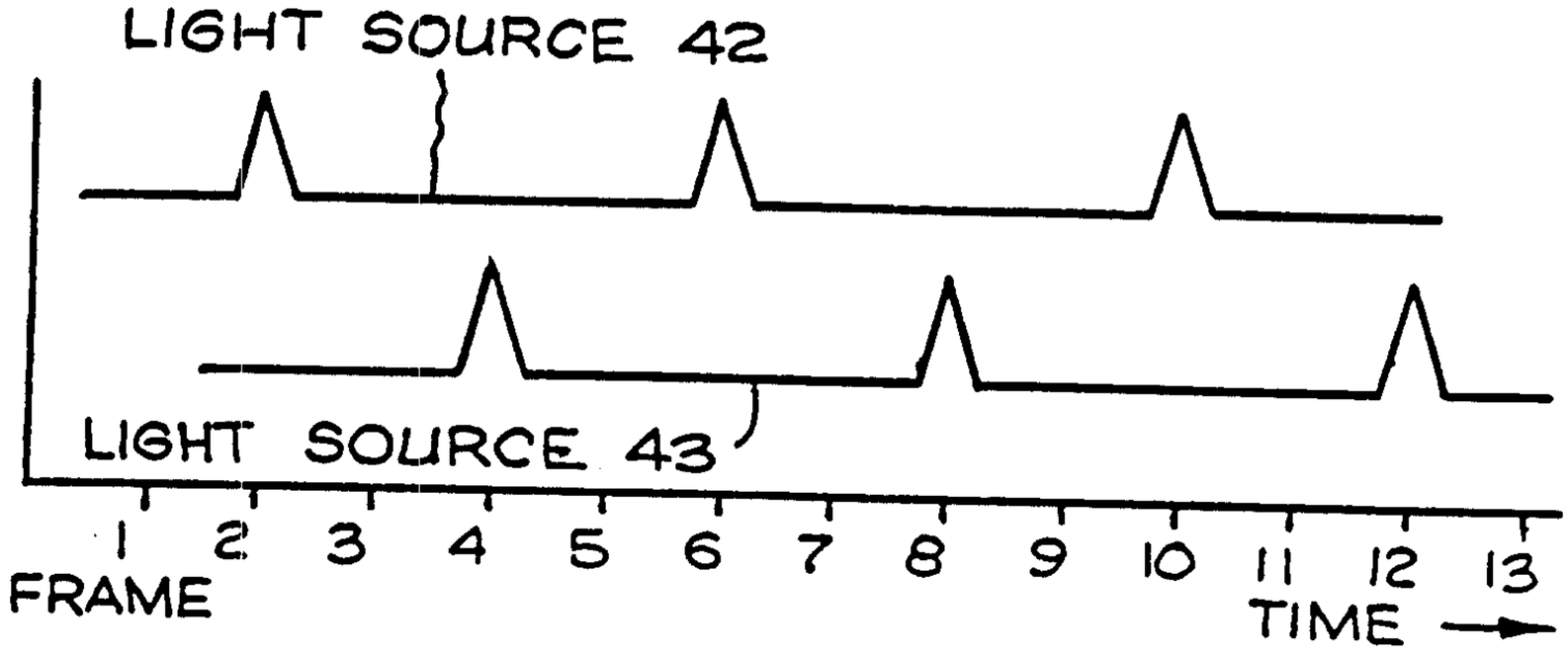
LIGHT SOURCE 42
LIGHT SOURCE 43
1
2
3
4
5
6
7
8
9
10
11
12
13
FRAME
TIME

FIG. 4

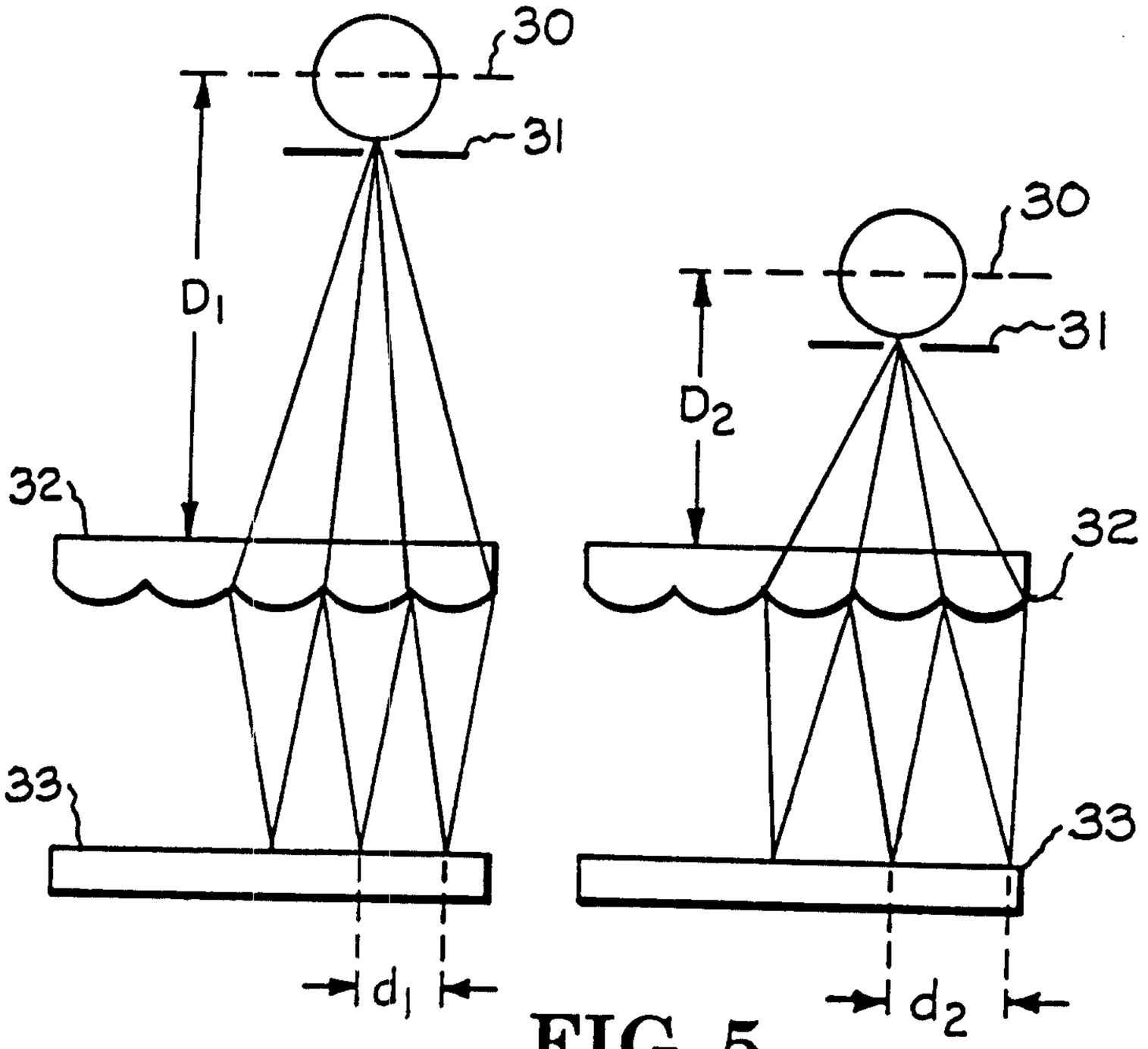
30
31
D1
32
33
d1
30
31
D2
32
33
d2

FIG. 5

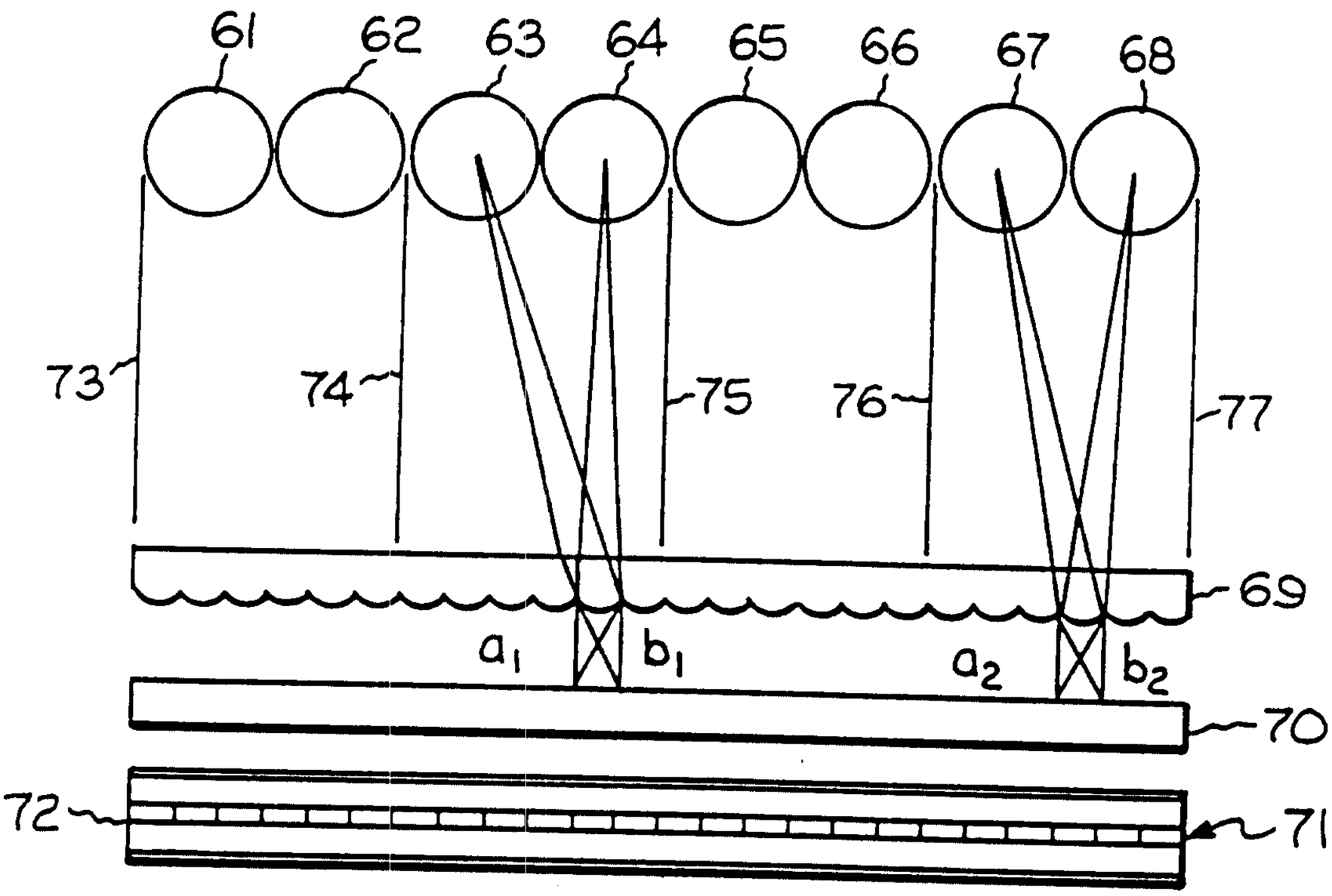
61
62
63
64
65
66
67
68
73
74
75
76
77
69
a1
b1
a2
b2
70
72
71

FIG. 6

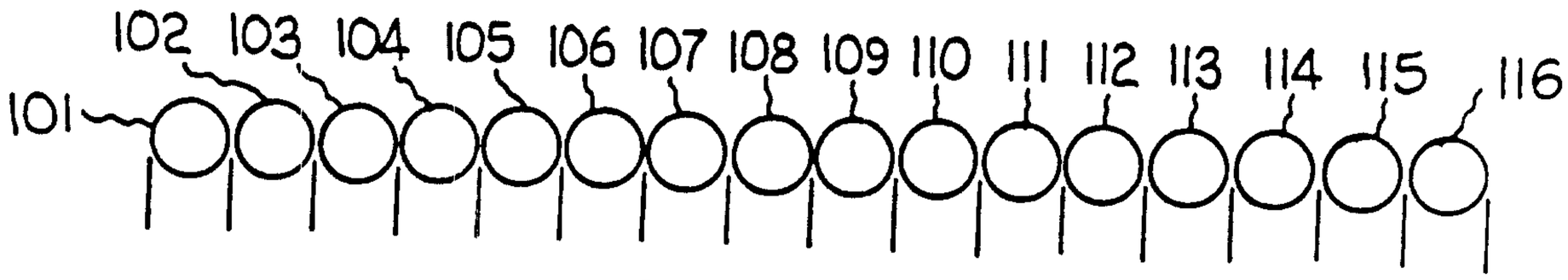

FIG. 6A

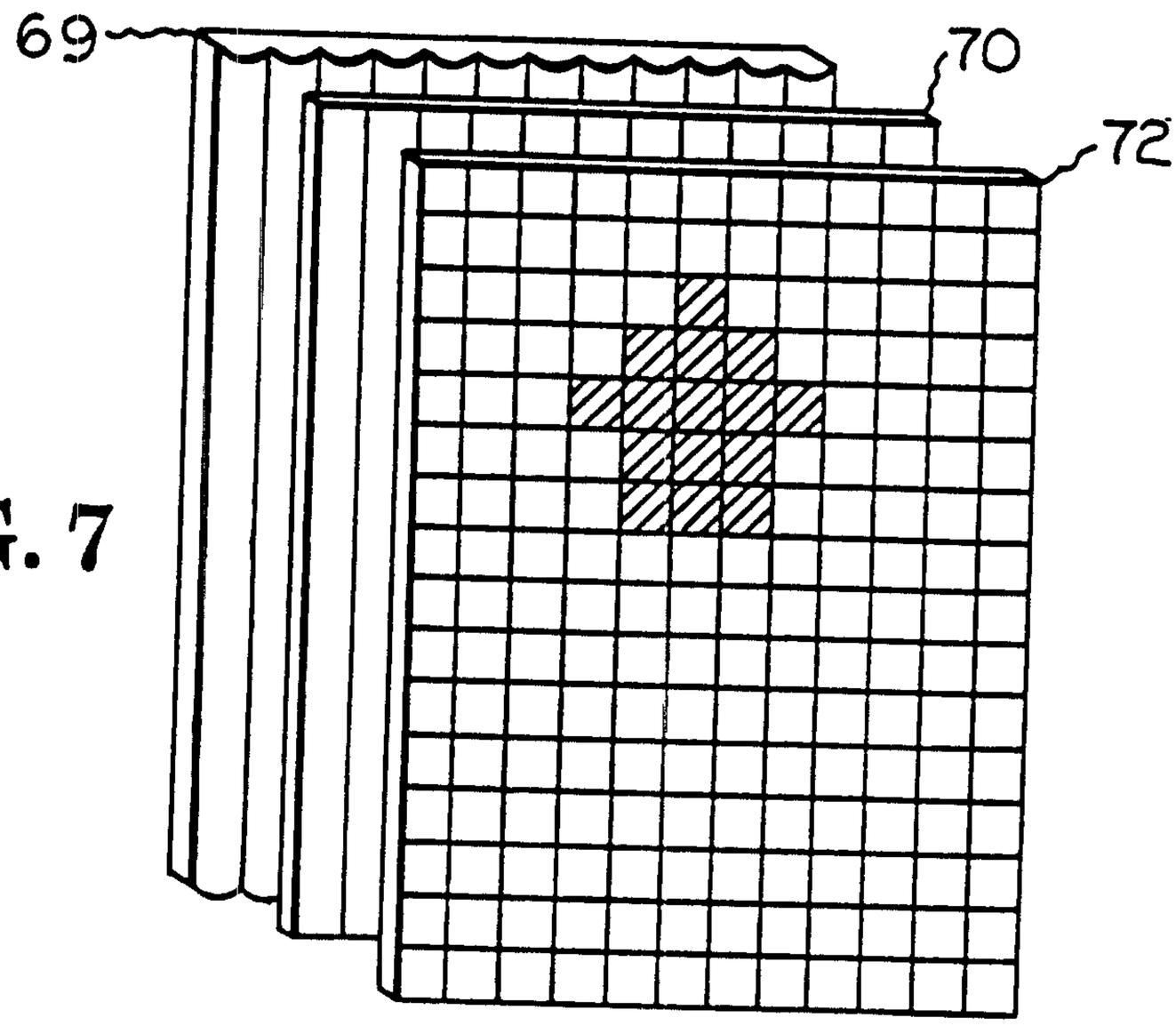

FIG. 7

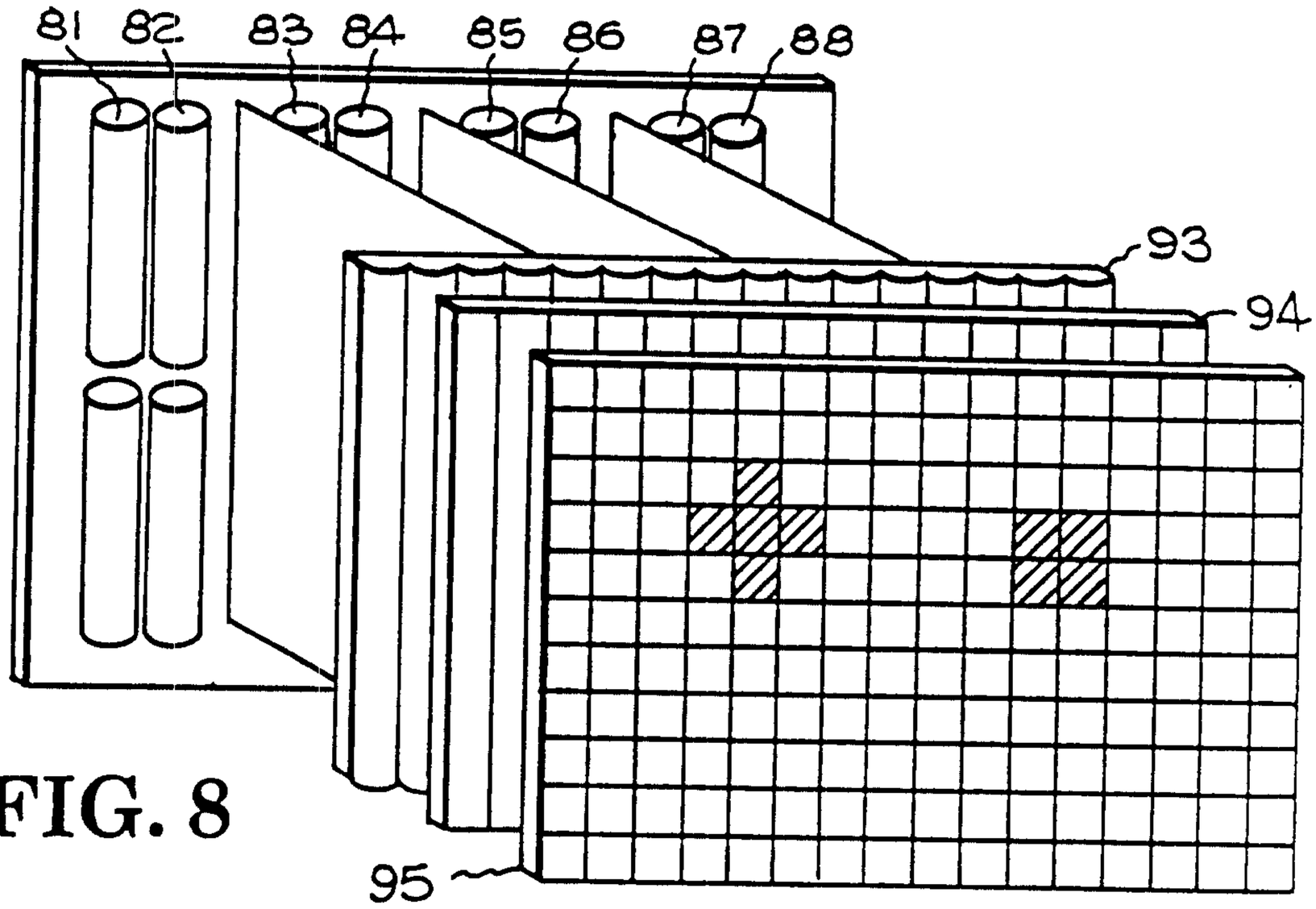

FIG. 8

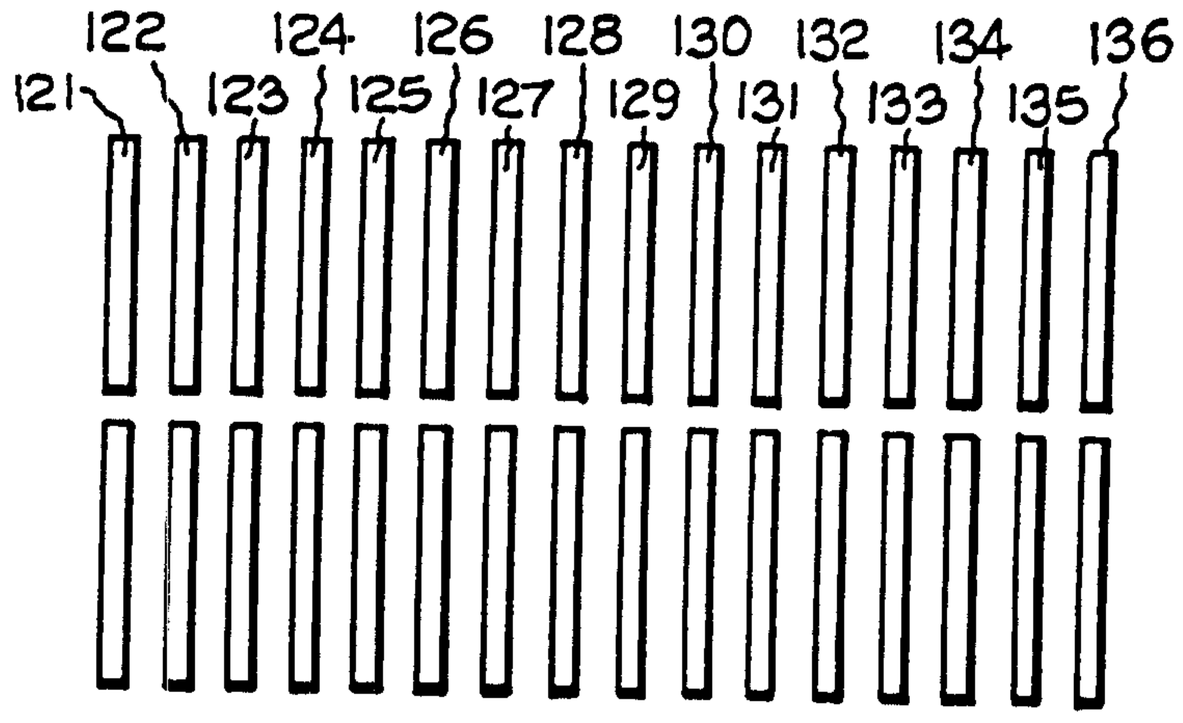
121
122
123
124
125
126
127
128
129
130
131
132
133
134
135
136

FIG. 8A

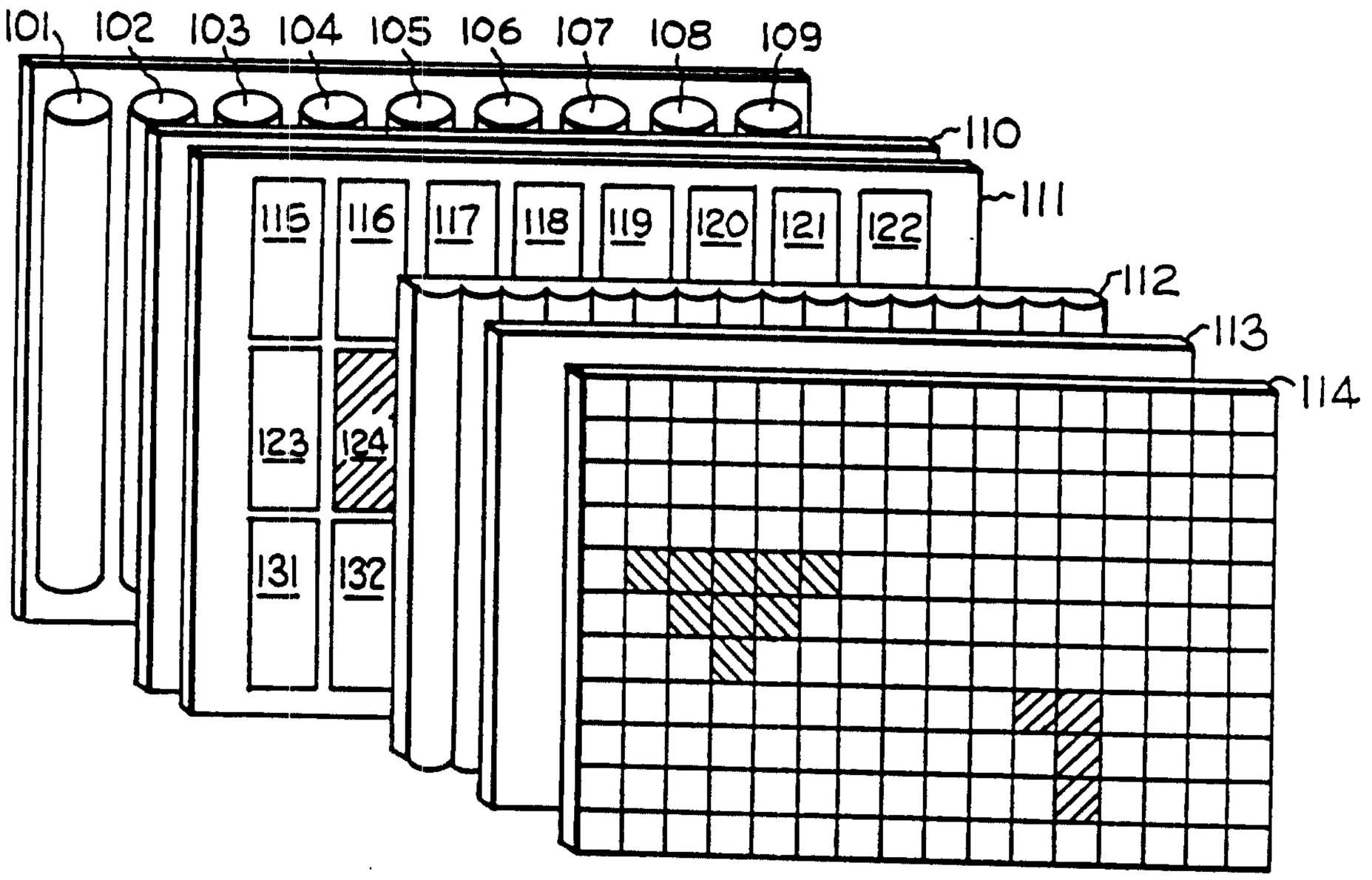
101
102
103
104
105
106
107
108
109
110
111
112
113
114
115
116
117
118
119
120
121
122
123
124
131
132

FIG. 9

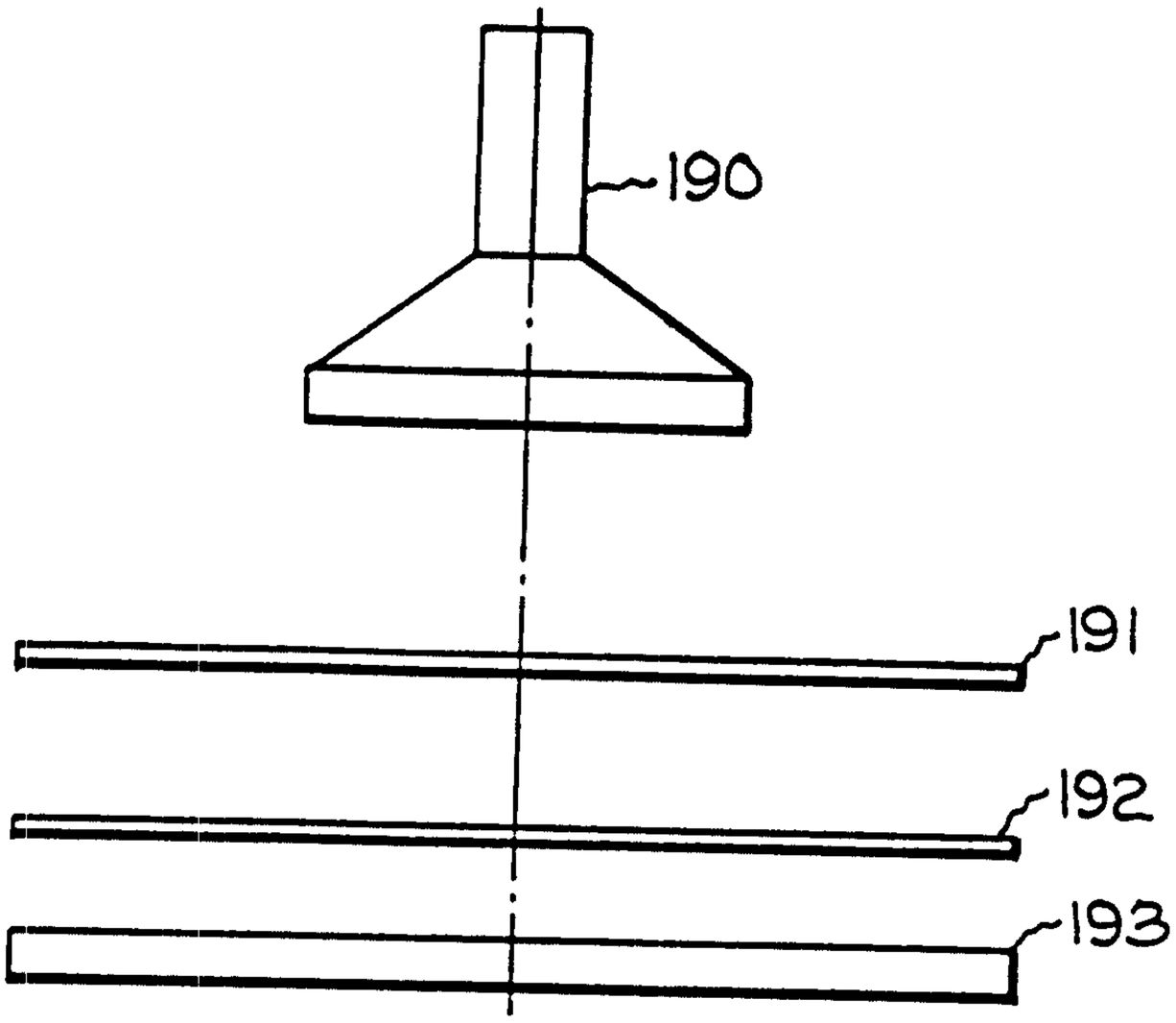

FIG. 10

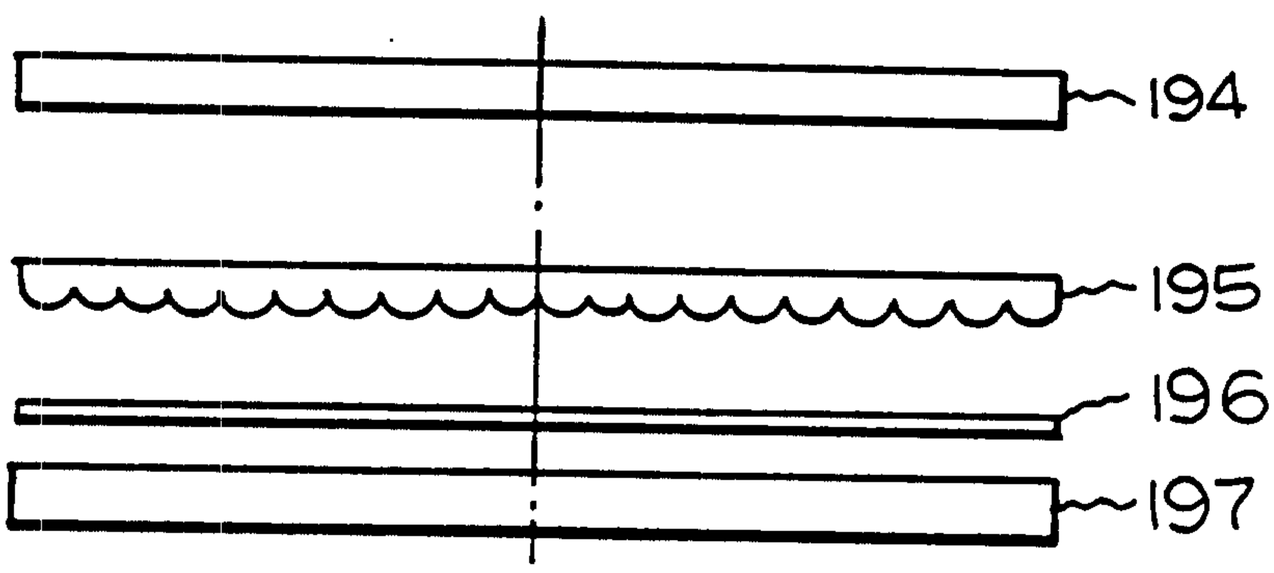

FIG. 11

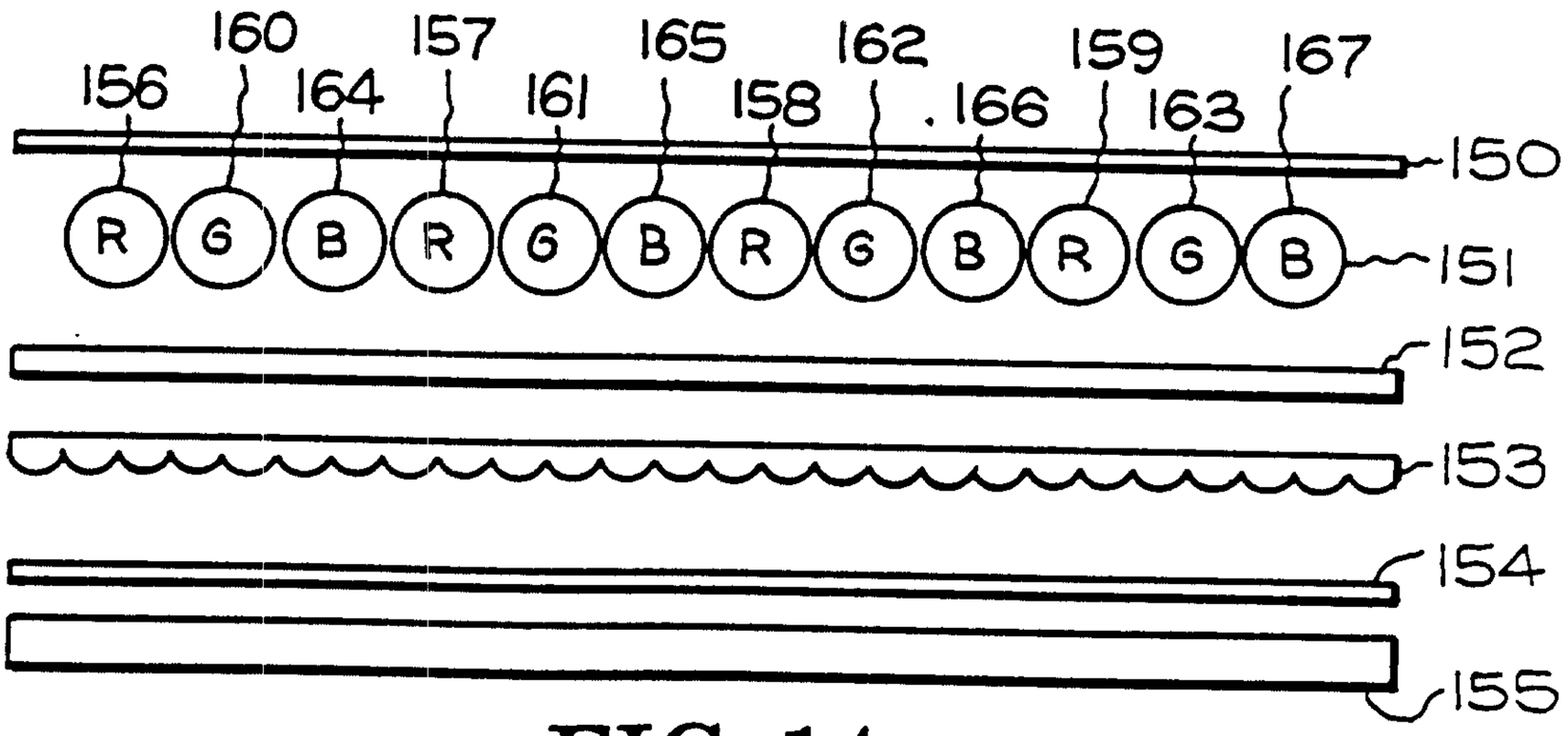

FIG. 14

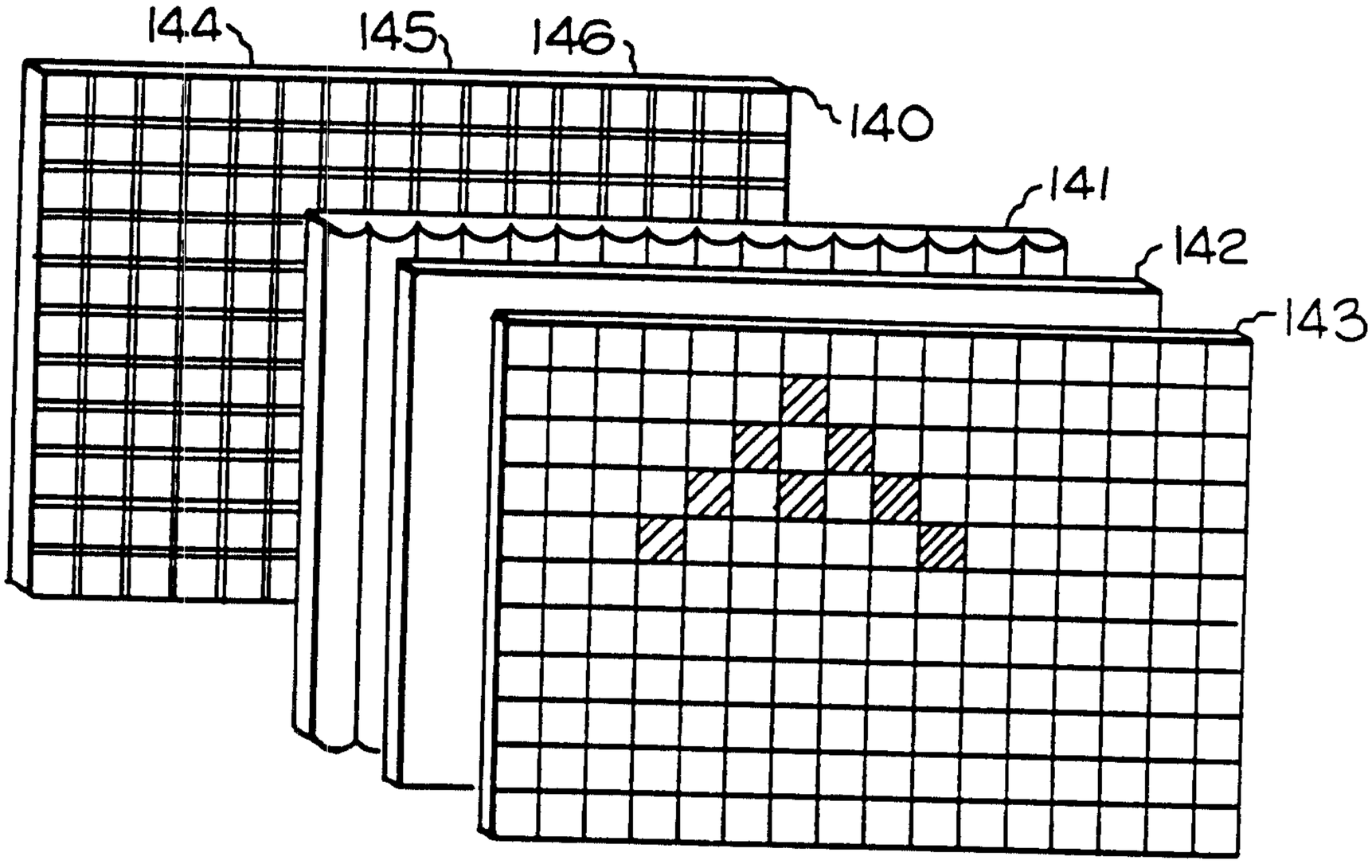
144
145
146
140
141
142
143

FIG. 12

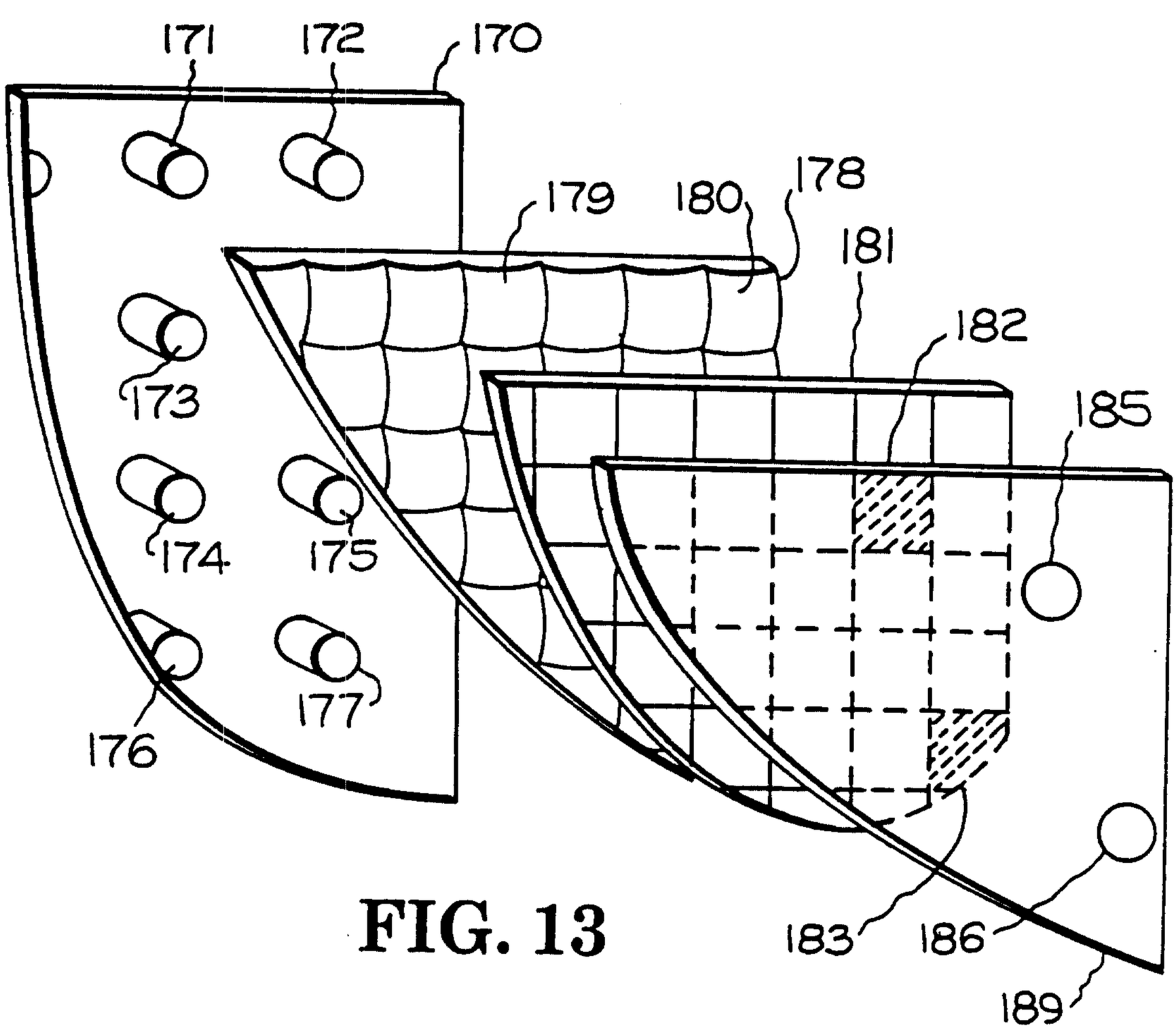
171
172
170
179
180
178
181
182
185
173
174
175
177
176
183
186
189

FIG. 13

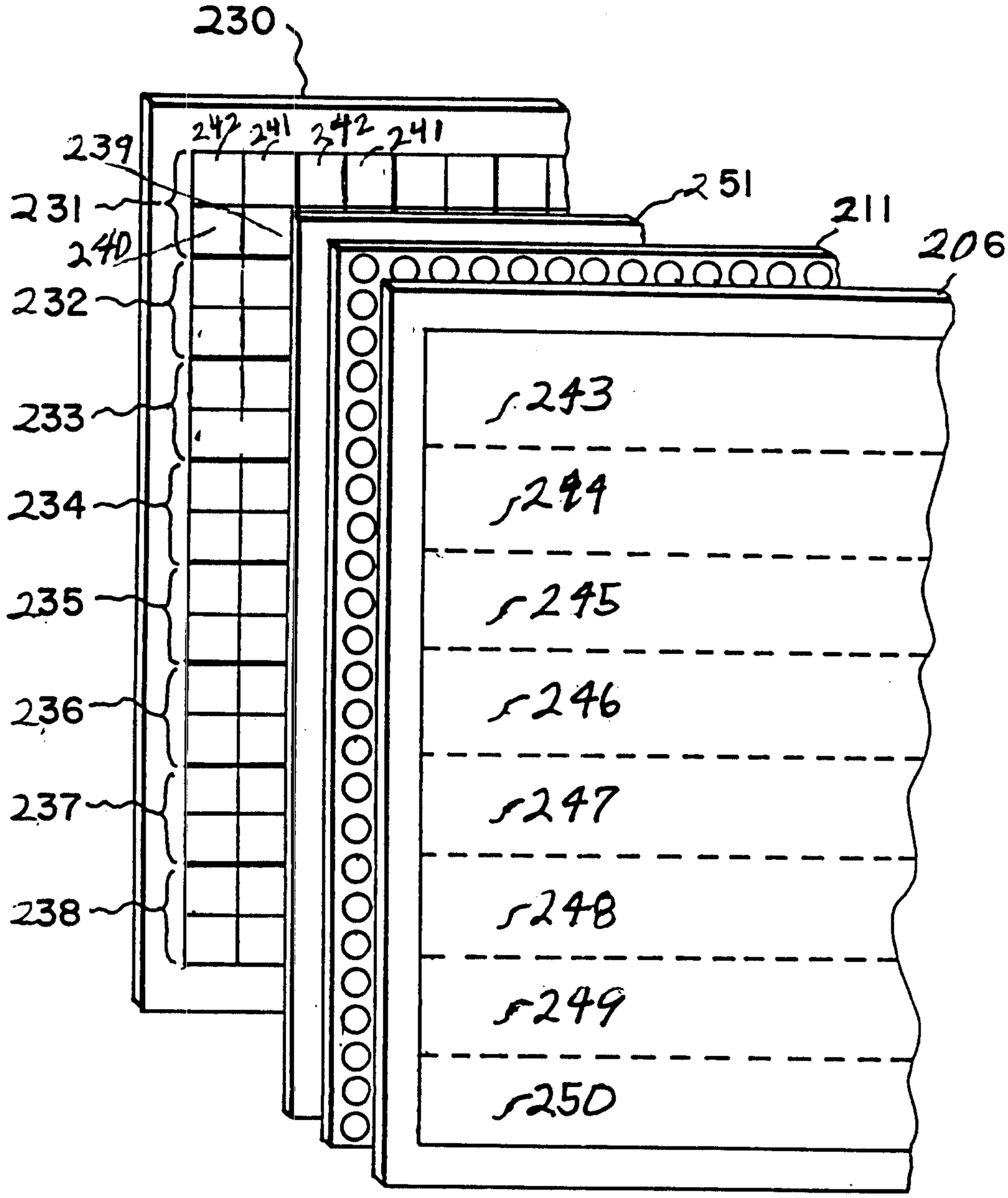
230
239
242
241
242
241
231
240
232
233
234
235
236
237
238
251
211
206
243
244
245
246
247
248
249
250

FIG. 15

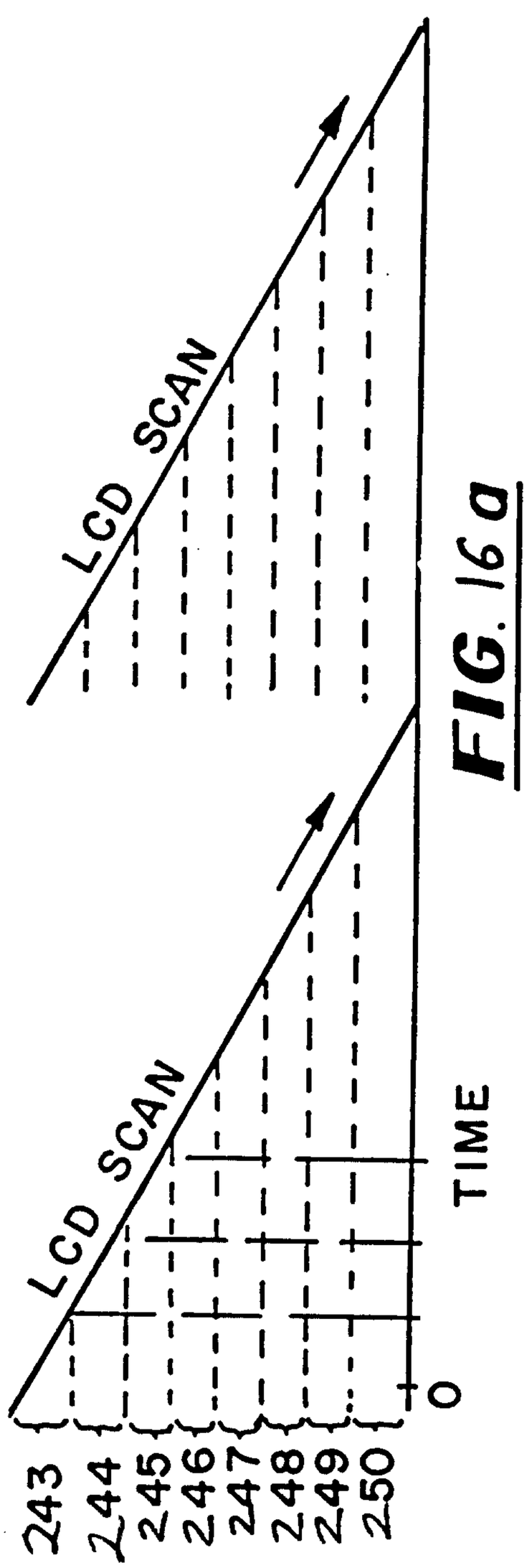

FIG. 16a

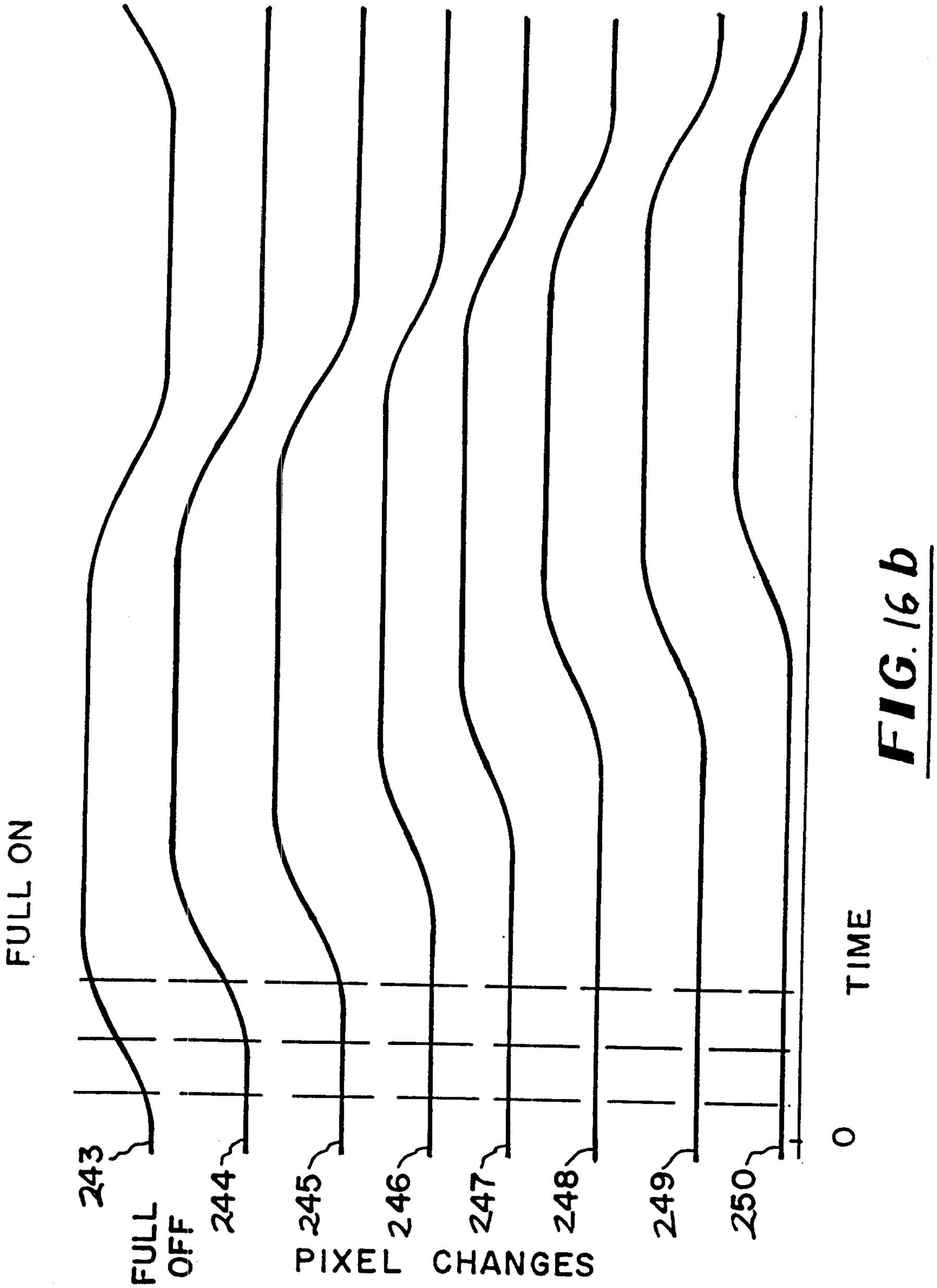
FULL ON
FULL OFF
243
244
245
246
247
248
249
250
0
TIME
PIXEL CHANGES

FIG. 16 b

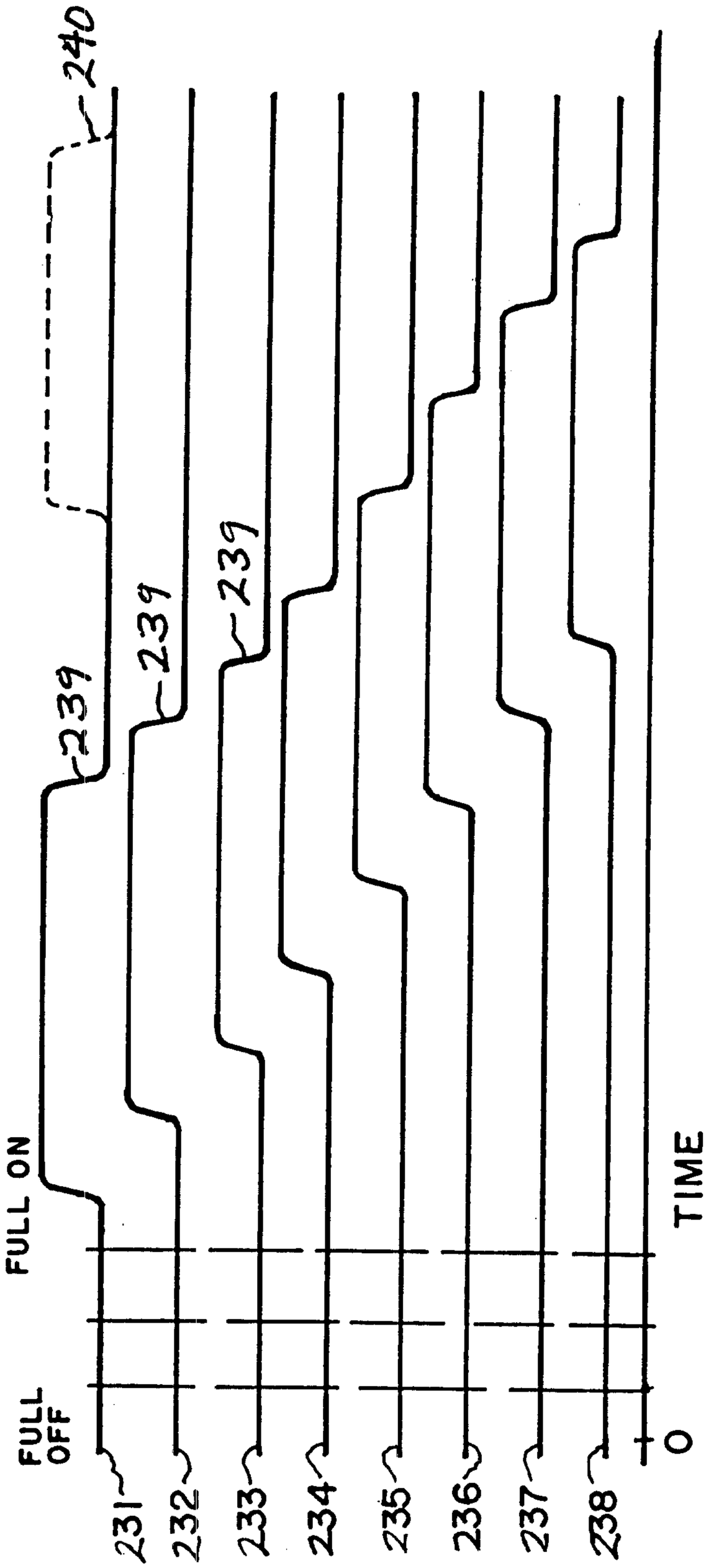
240
239
239
239
FULL ON
FULL OFF
231
232
233
234
235
236
237
238
TIME
0

FIG. 16C

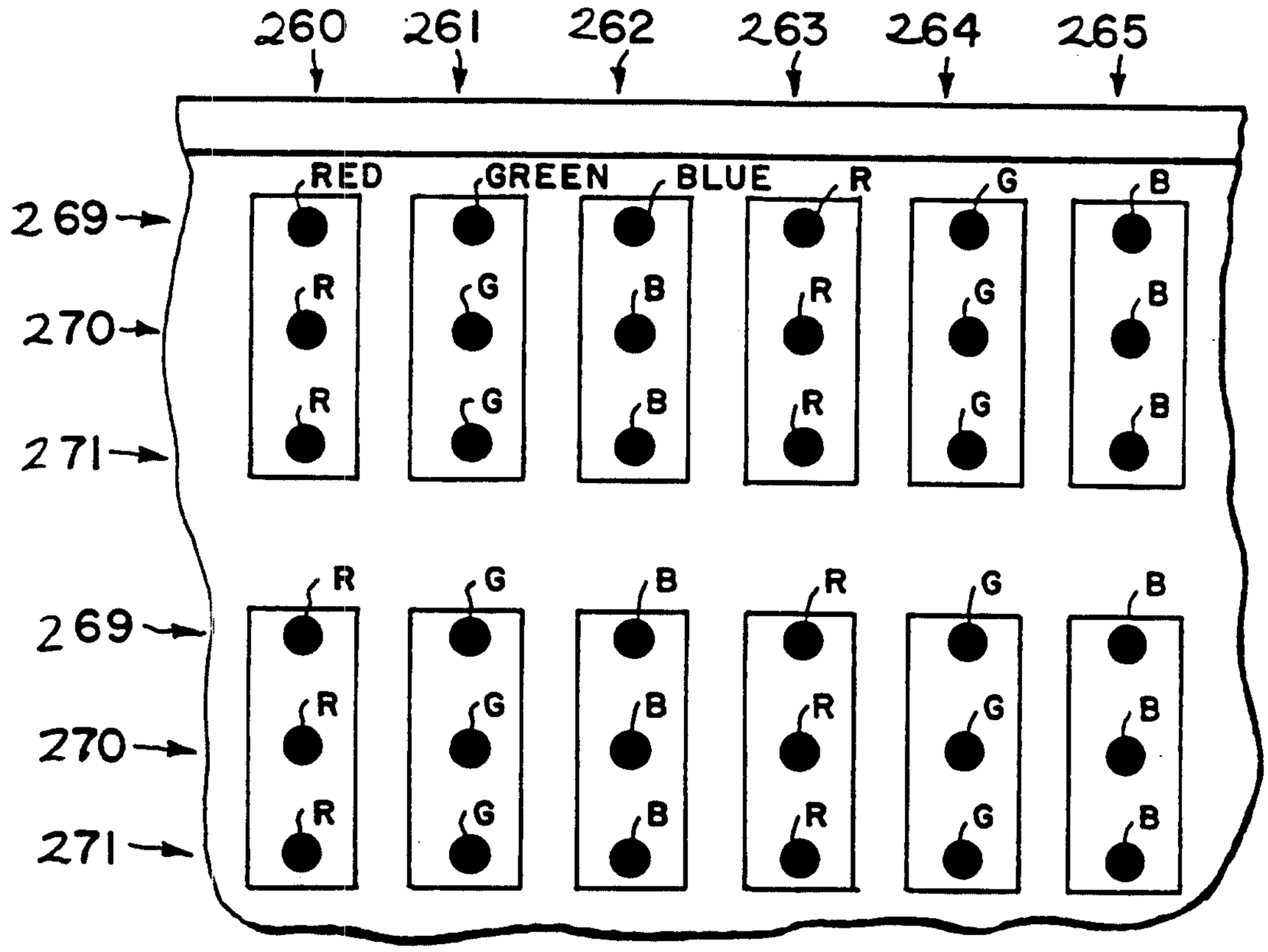
260
261
262
263
264
265
RED
GREEN
BLUE
R
G
B
269
270
271

FIG. 17

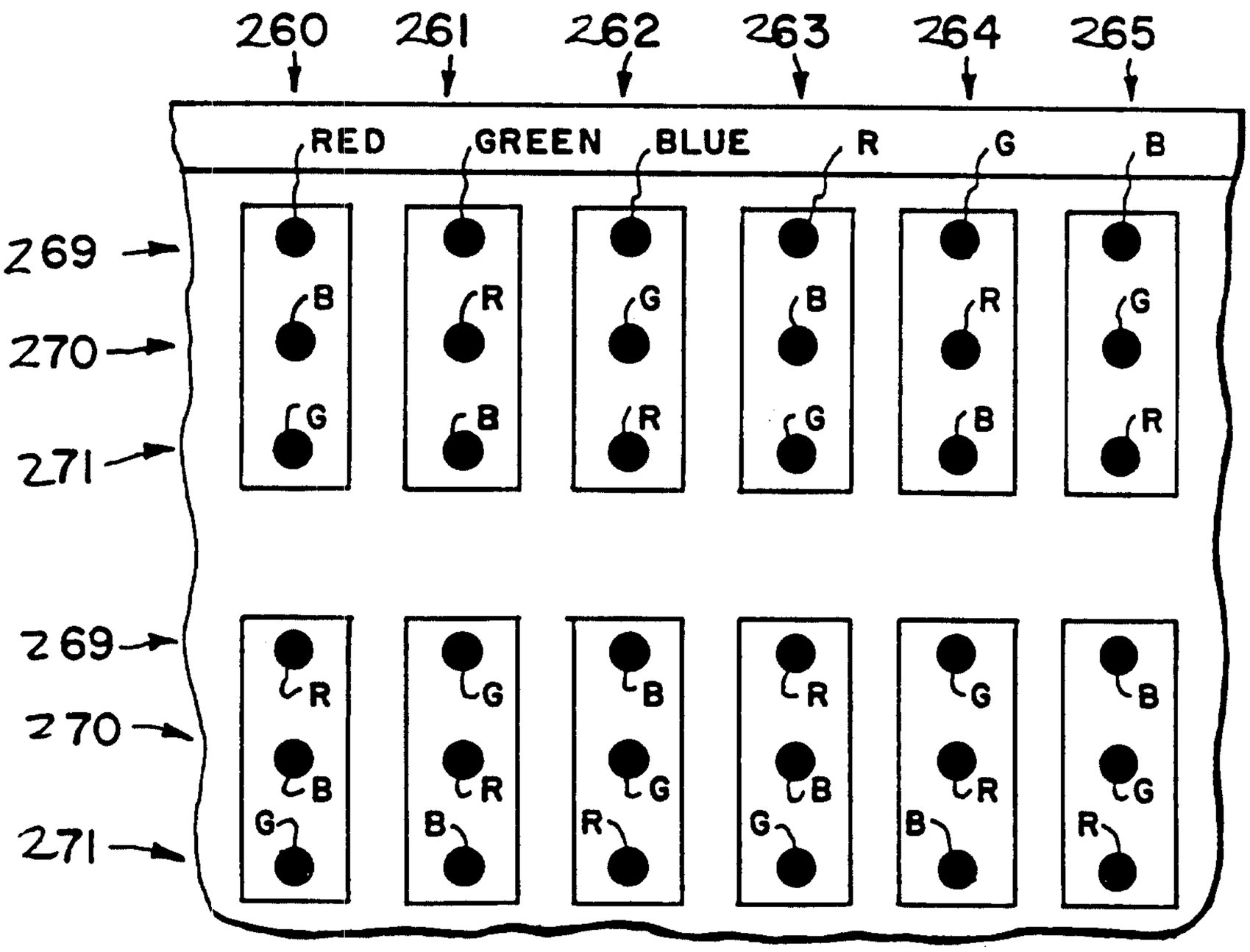
260
261
262
263
264
265
RED
GREEN
BLUE
R
G
B
269
270
271

FIG. 19

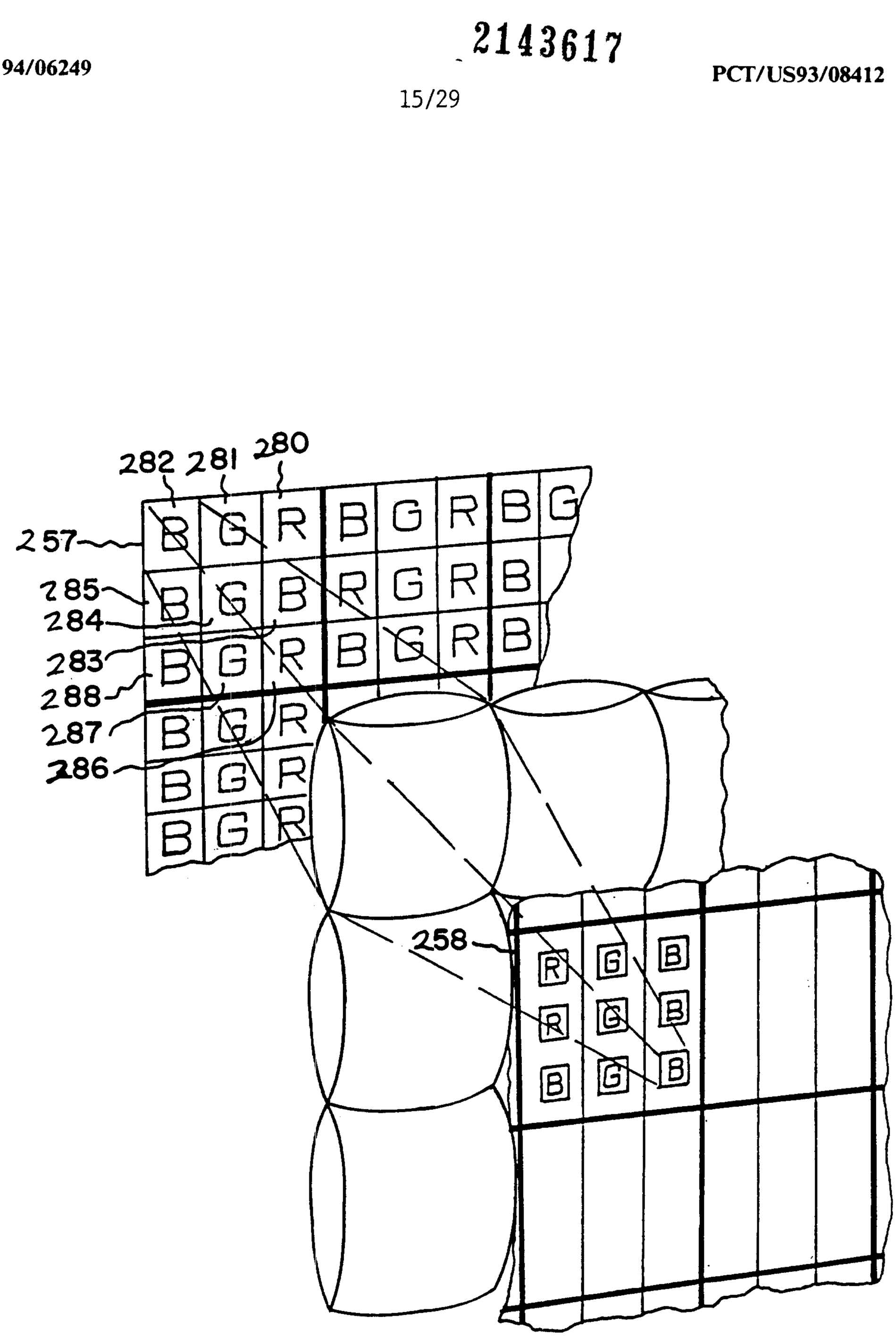

FIG. 18

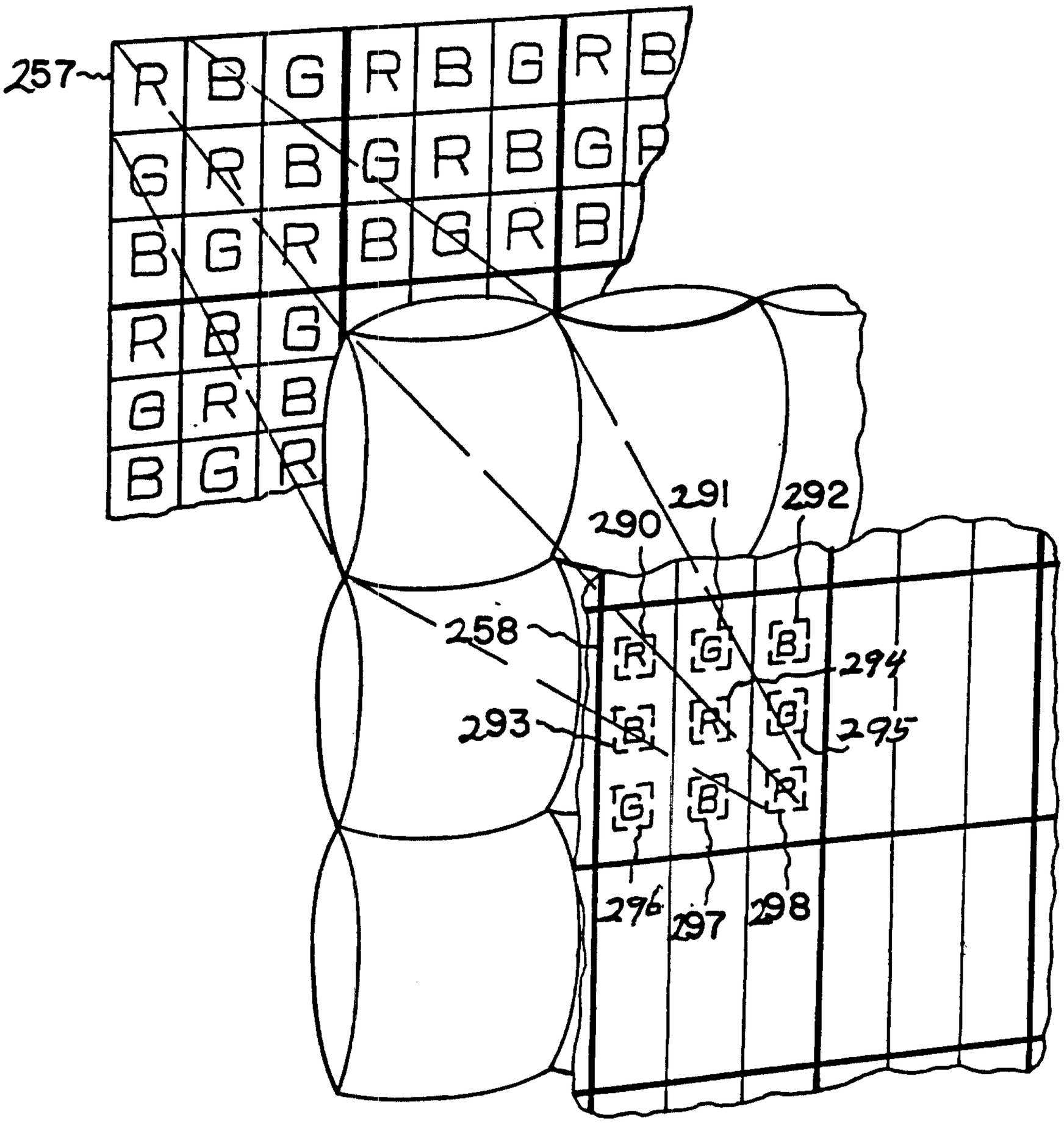
257
R B G R B G R B
G R B G R B G R
B G R B G R B
R B G
G R B
B G R
290
291
292
258
293
294
295
296
297
298

FIG. 20

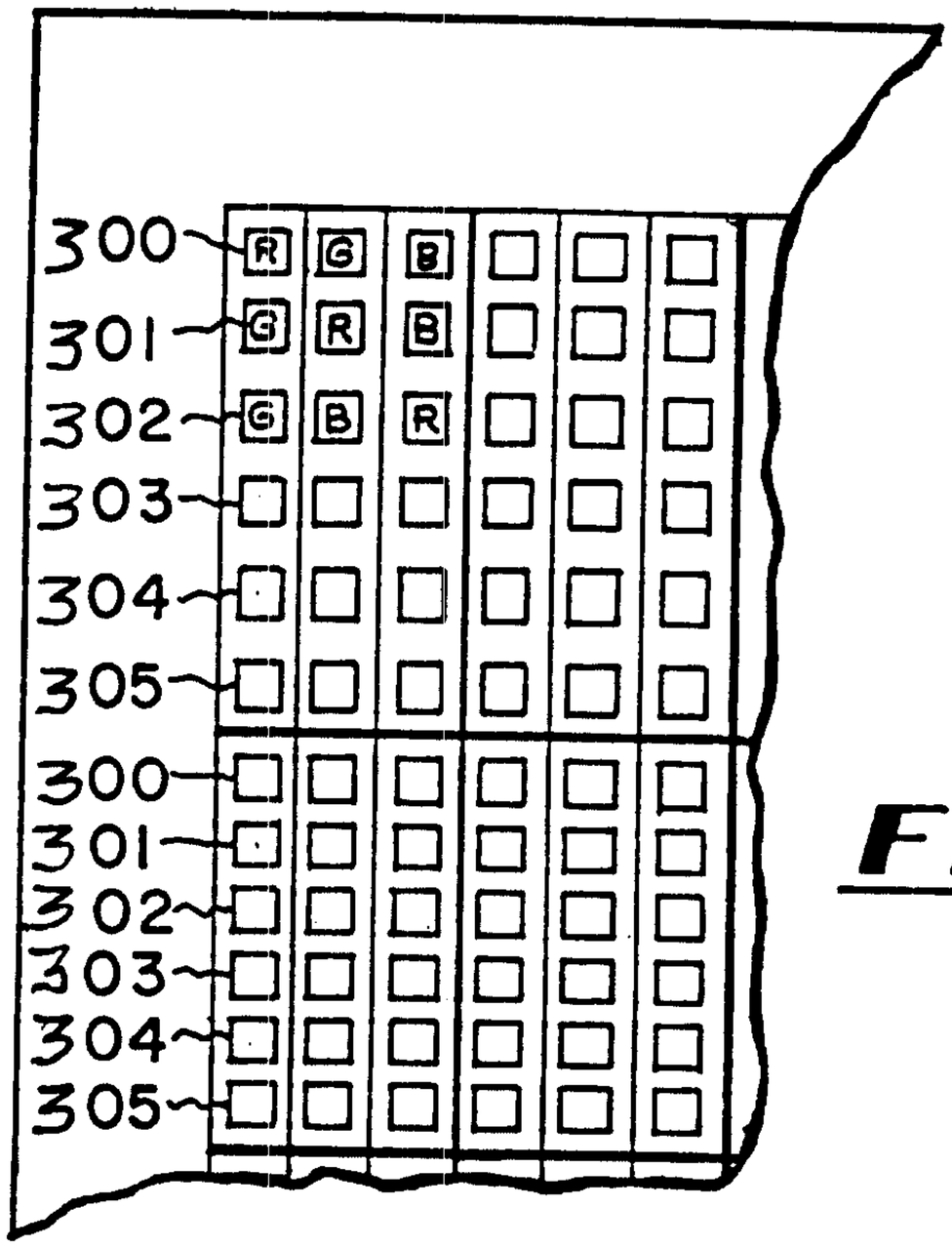

FIG. 21

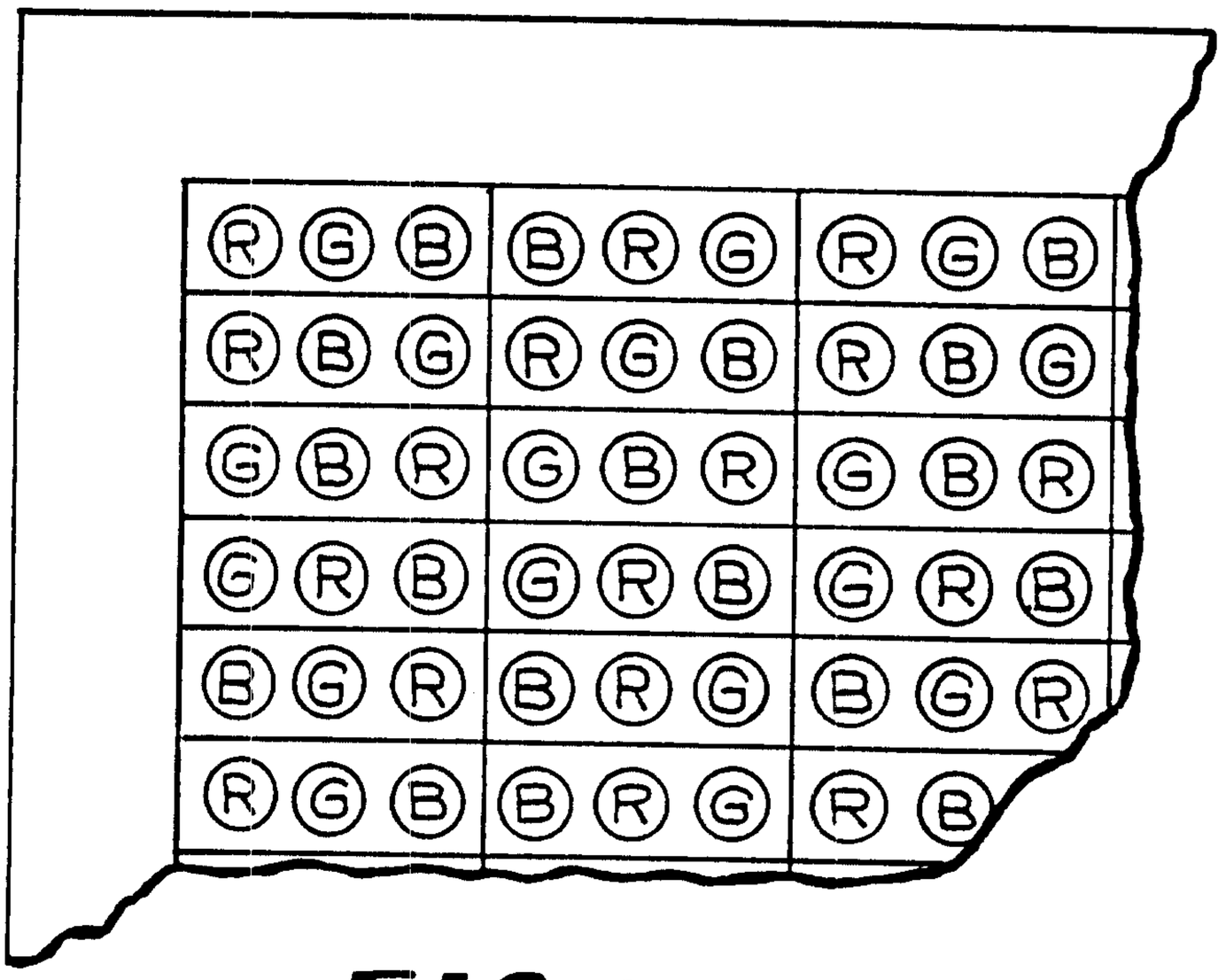

FIG. 22

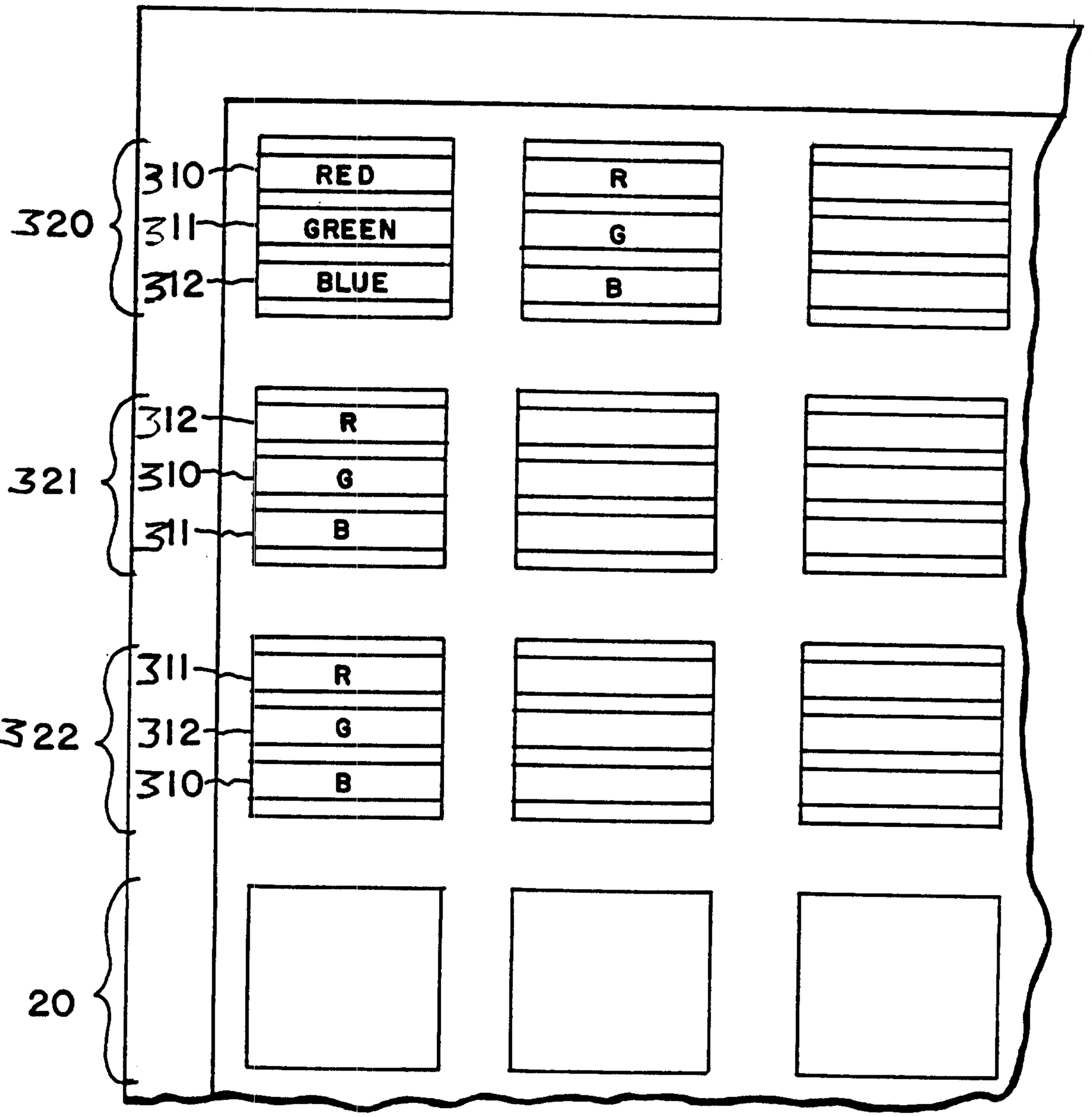
320
310
311
312
RED
GREEN
BLUE
R
G
B
321
312
310
311
R
G
B
322
311
312
310
R
G
B
20

FIG. 23

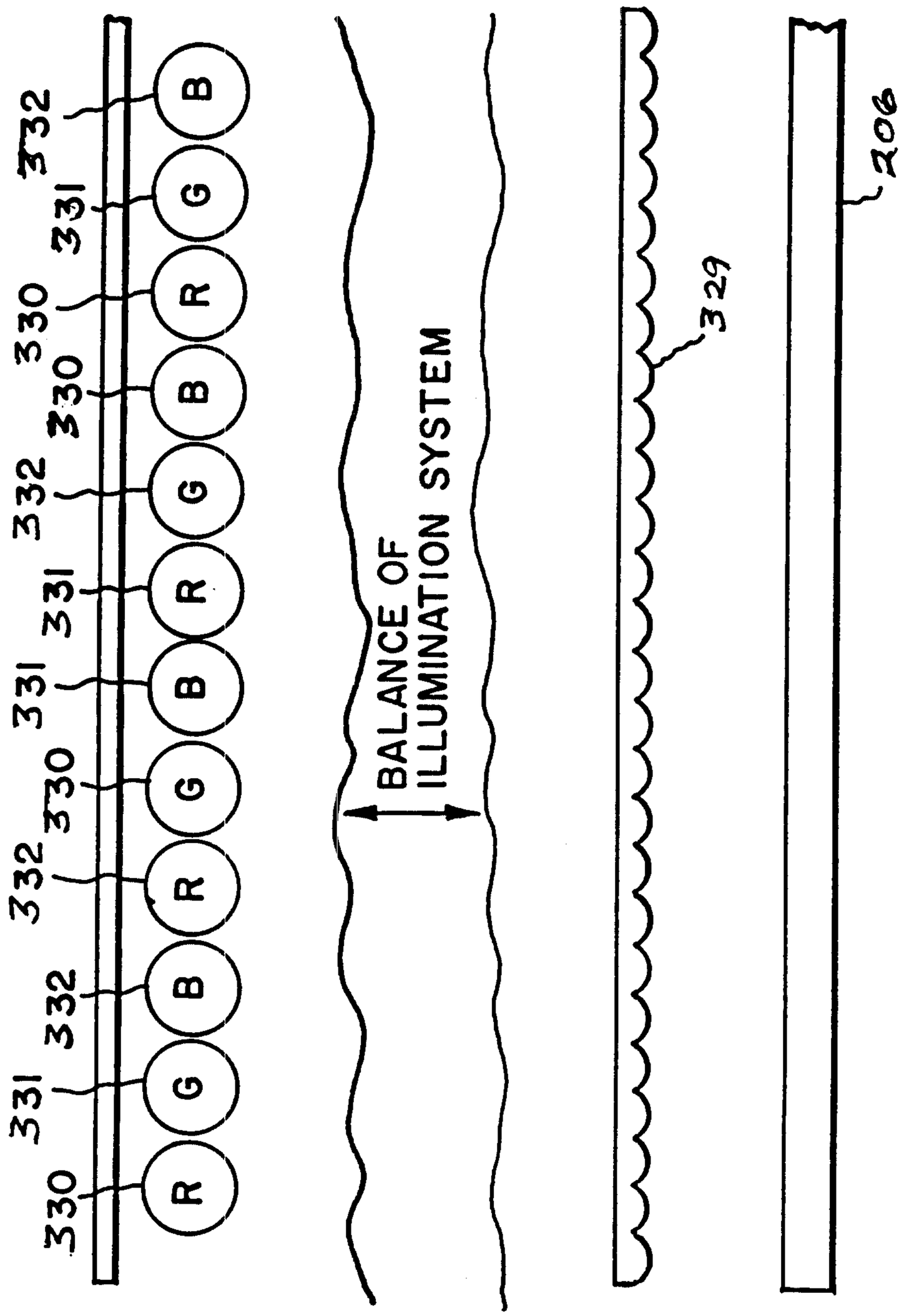

FIG. 24

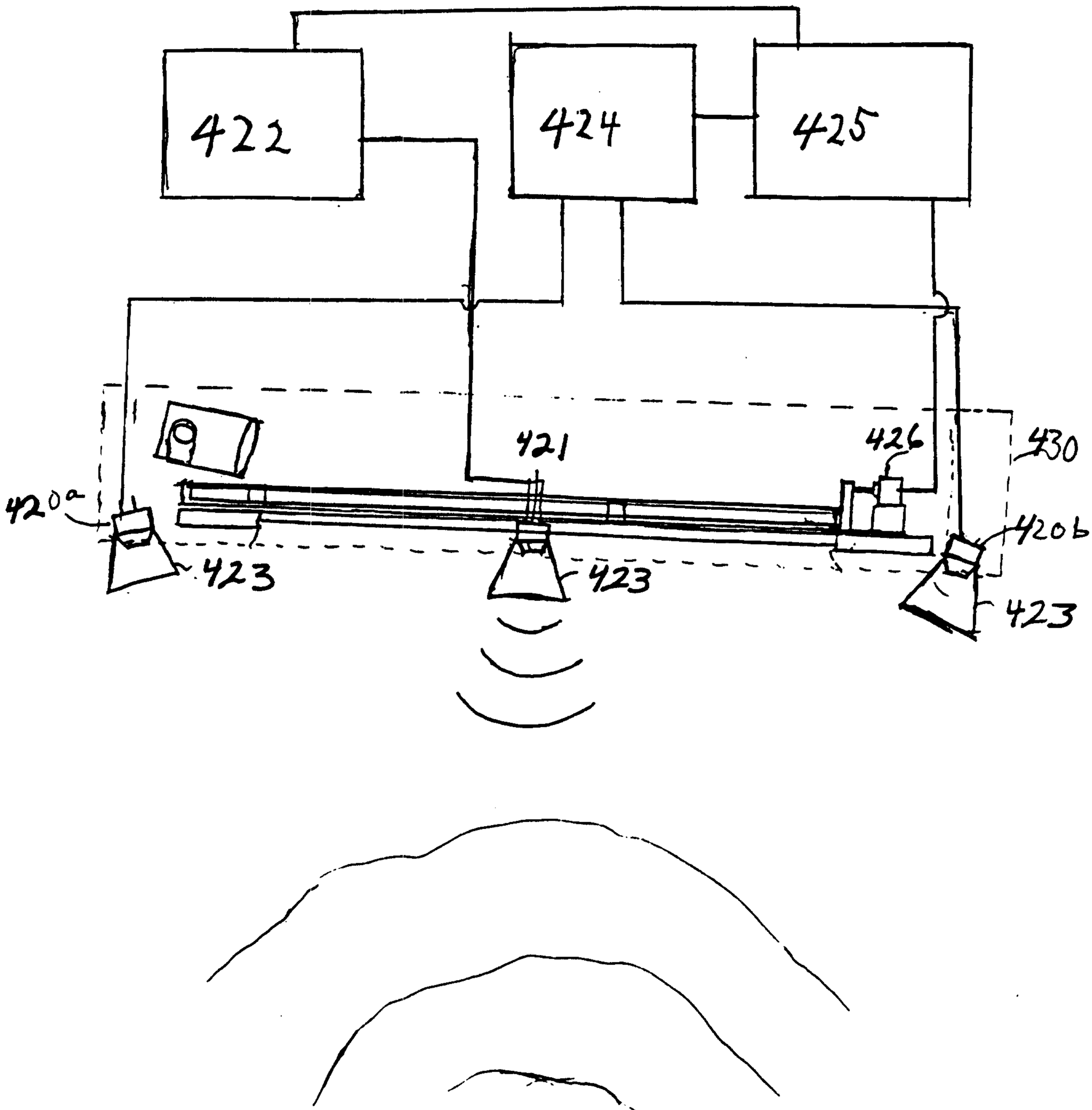

FIG. 25

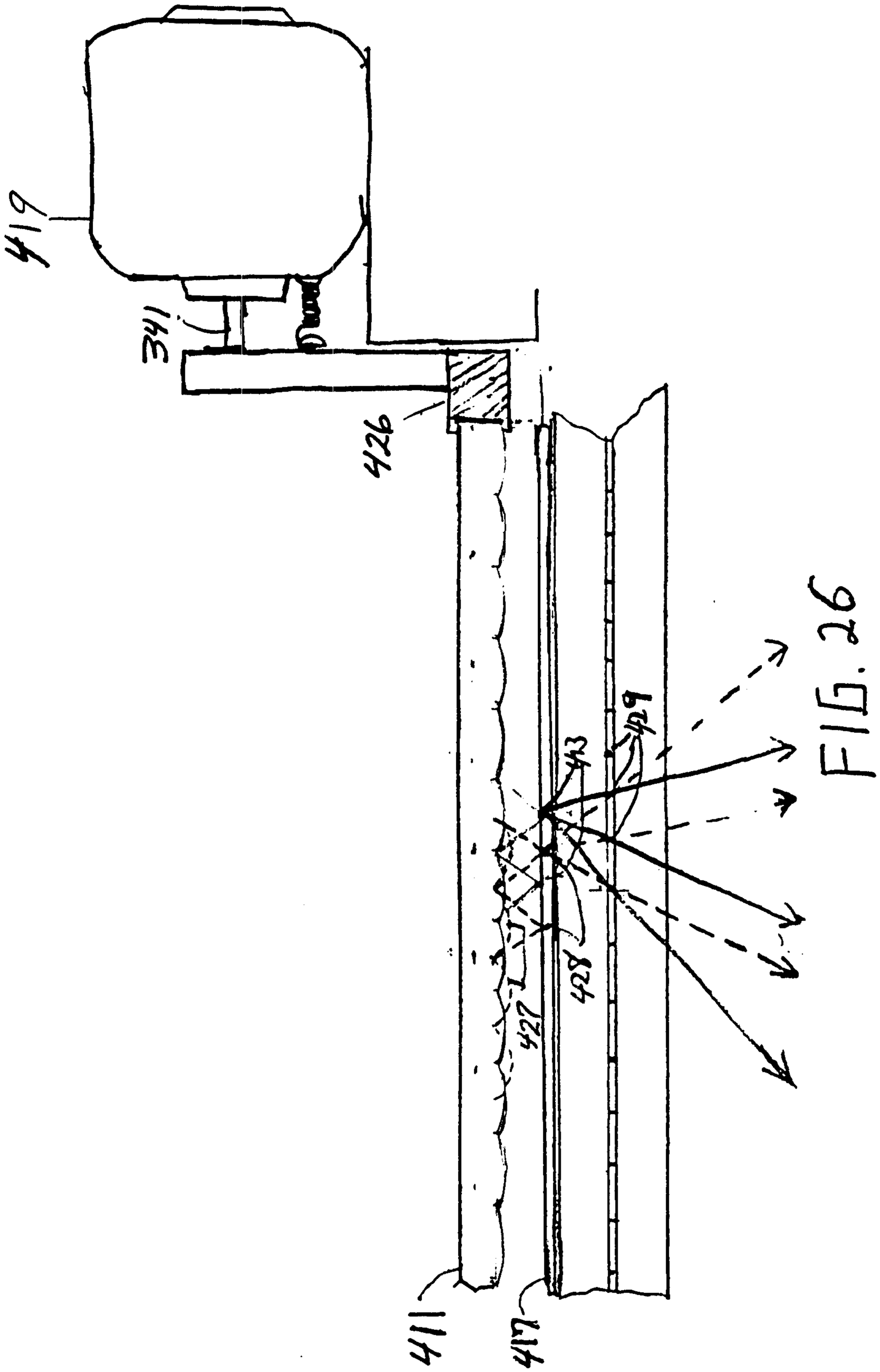

FIG. 26

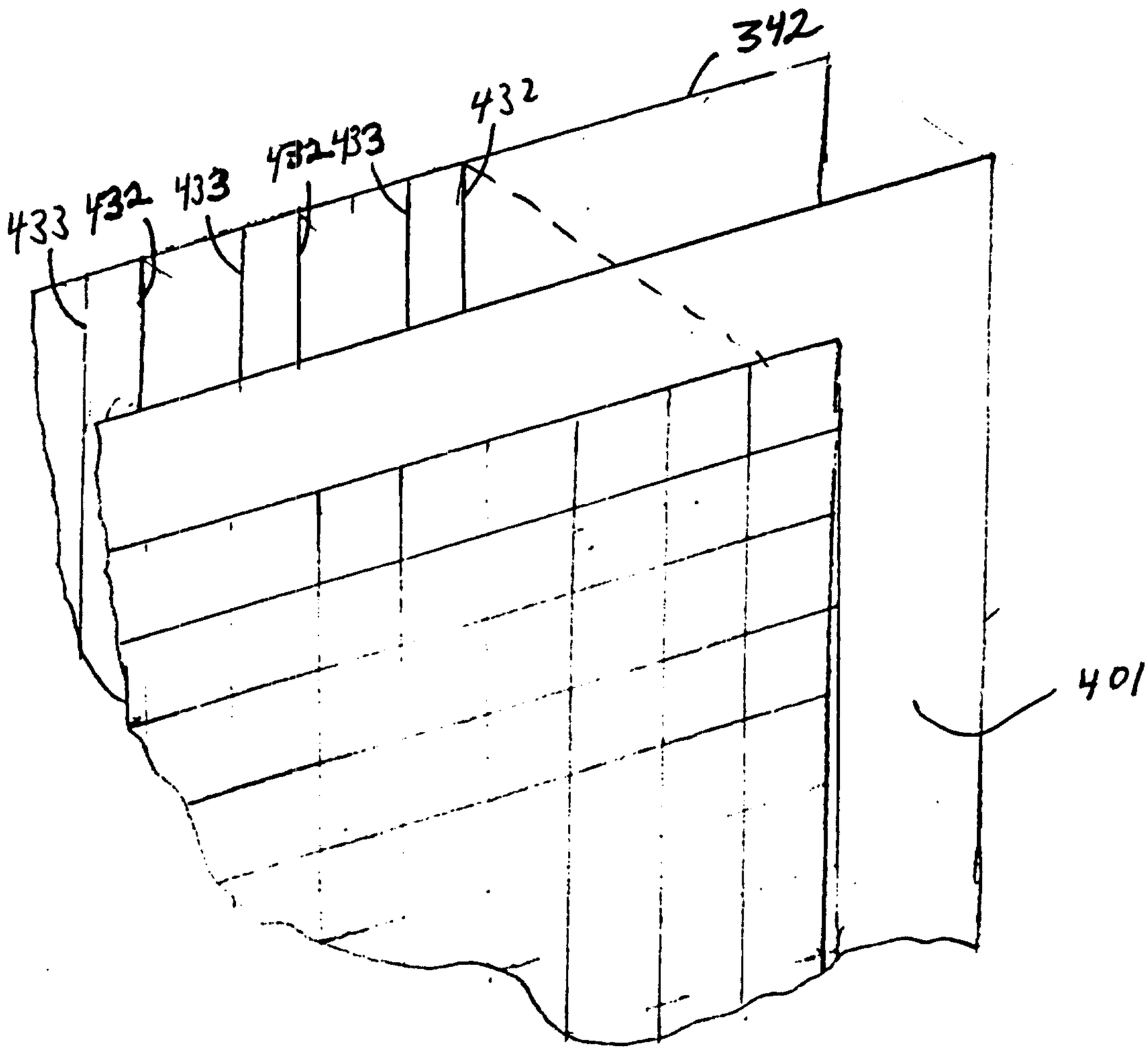

FIG. 27

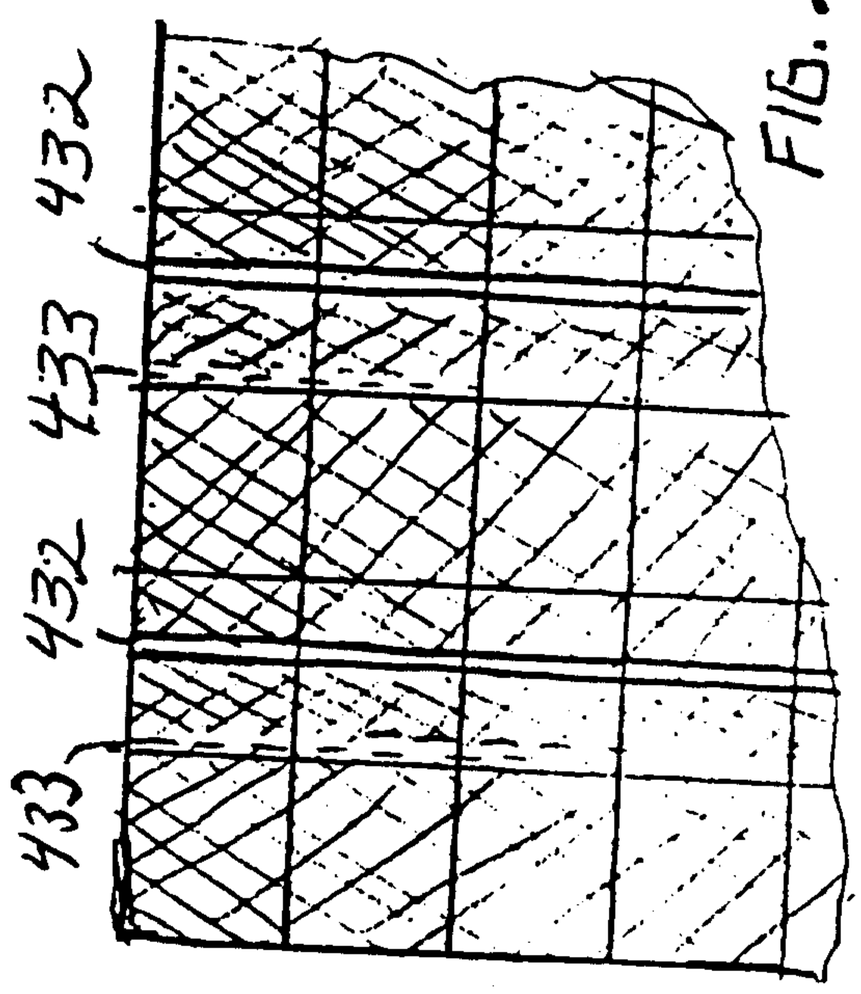

FIG. 28c

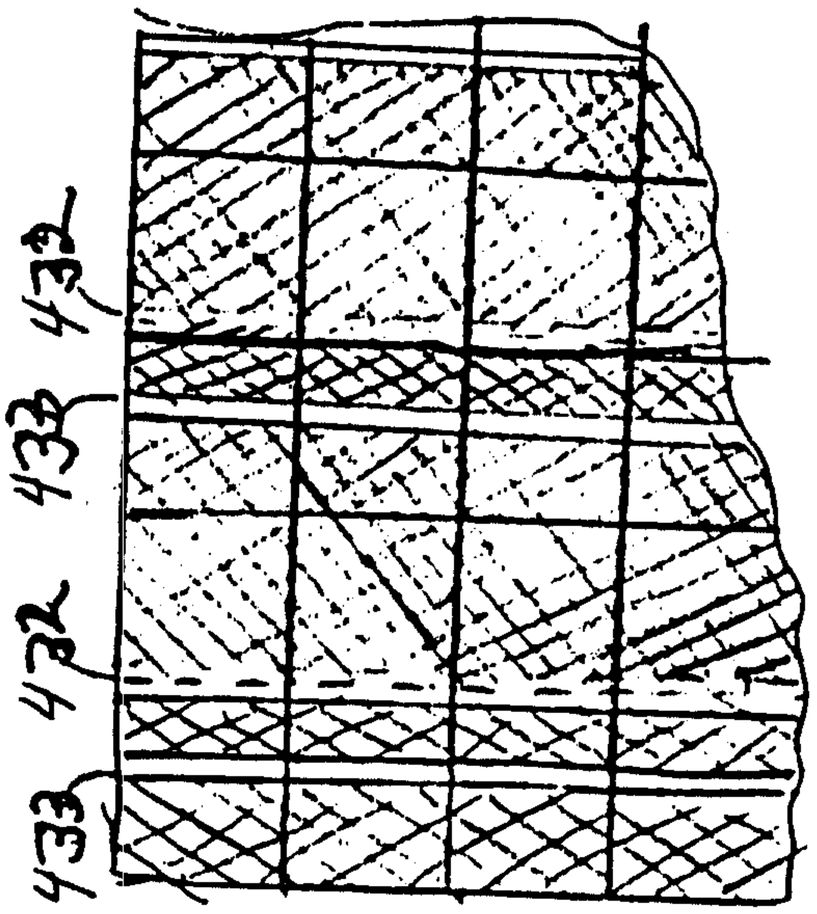

FIG. 28b

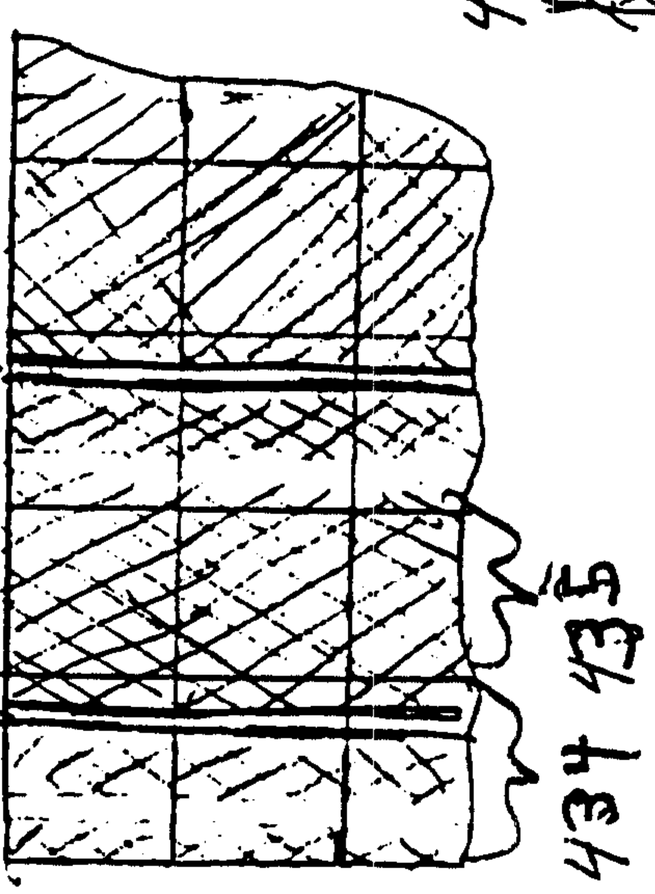

FIG. 28a

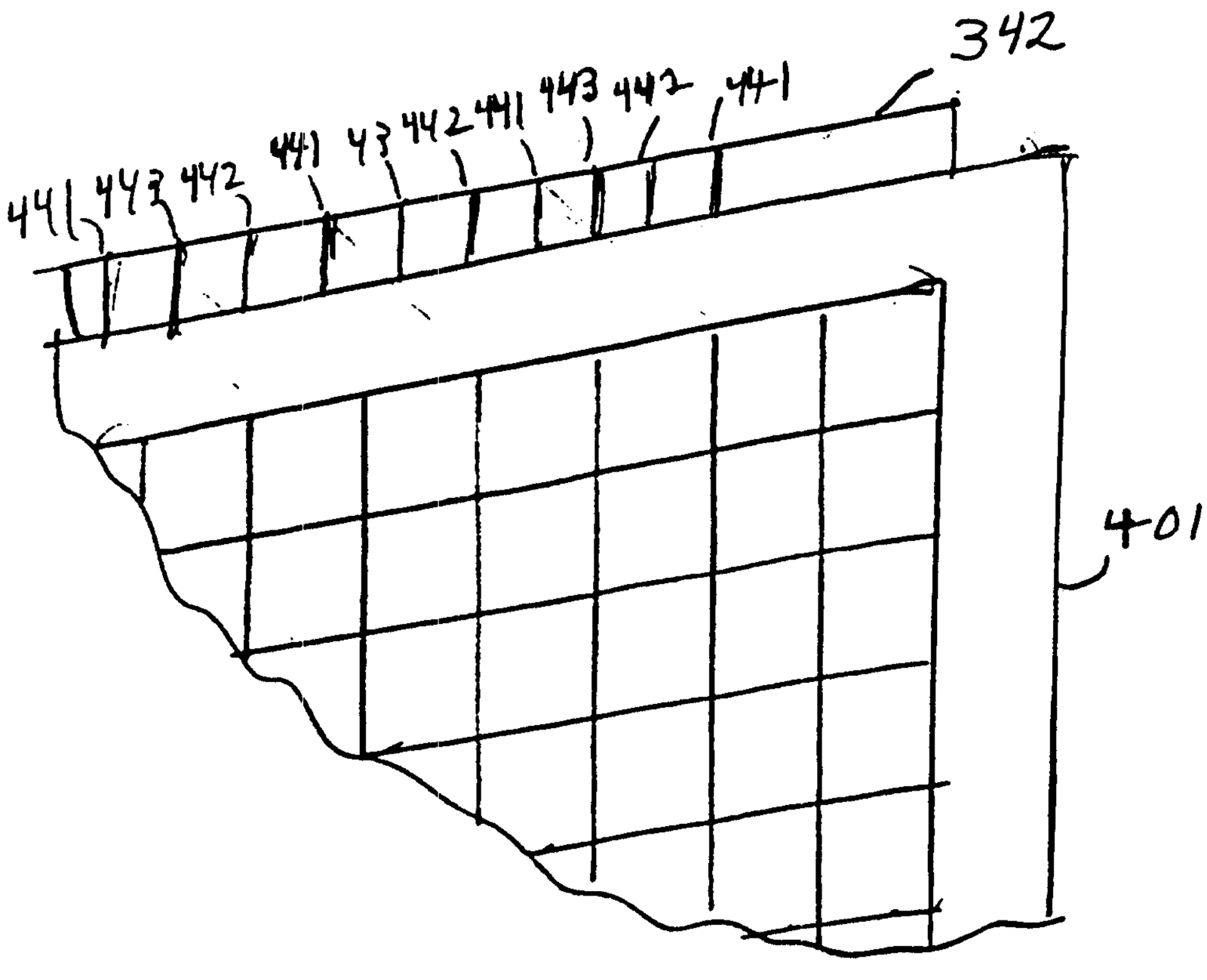

FIG. 29

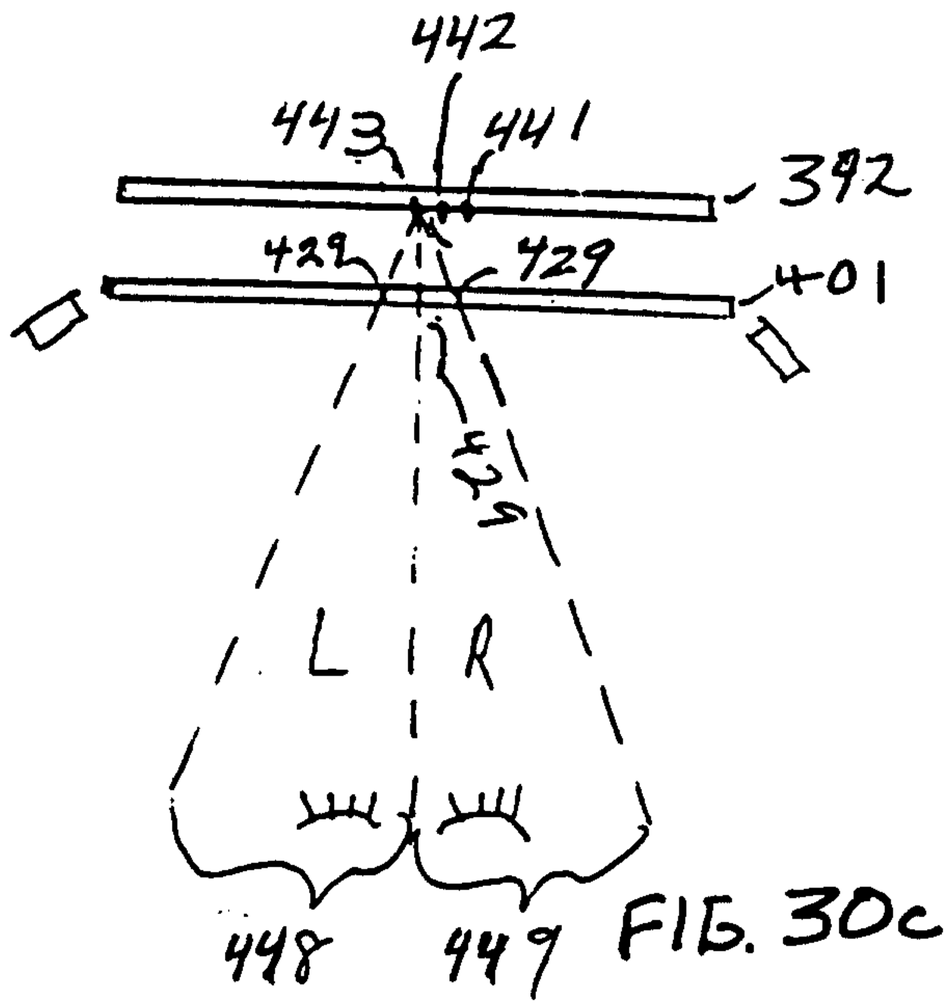

FIG. 30c

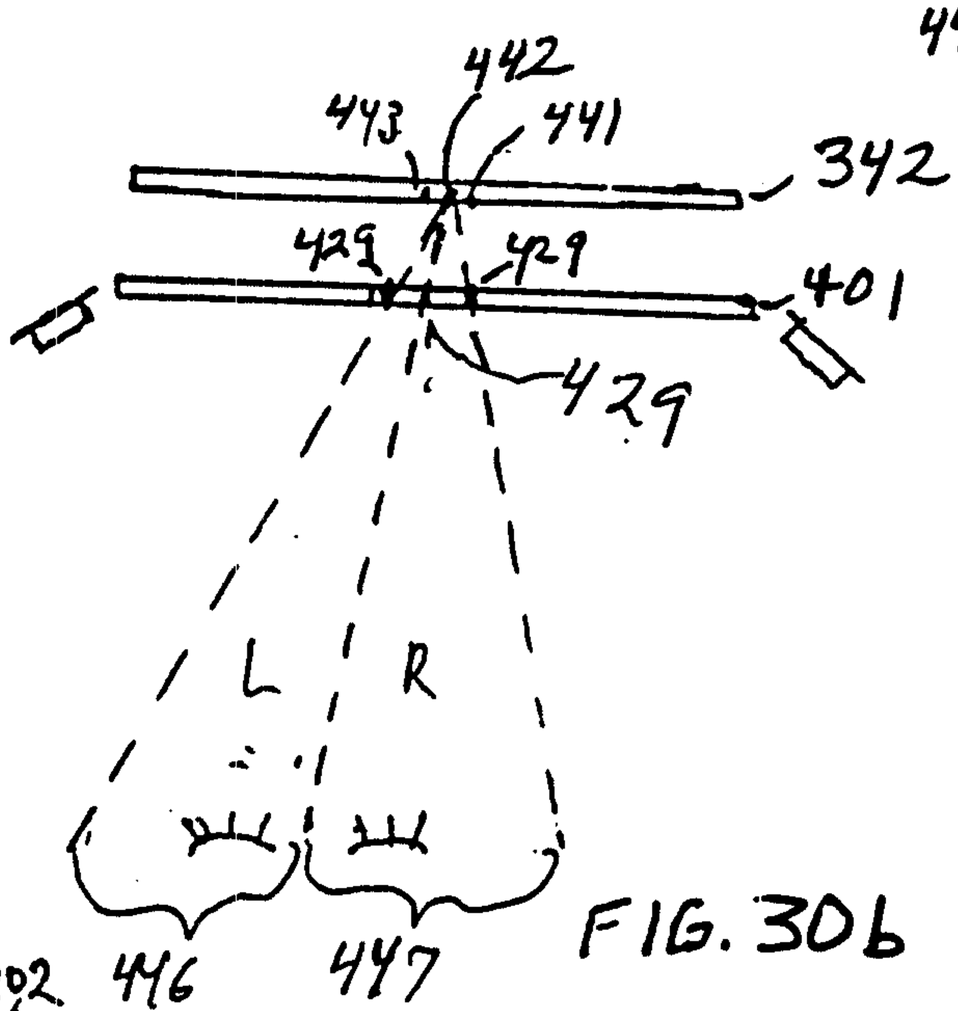

FIG. 30b

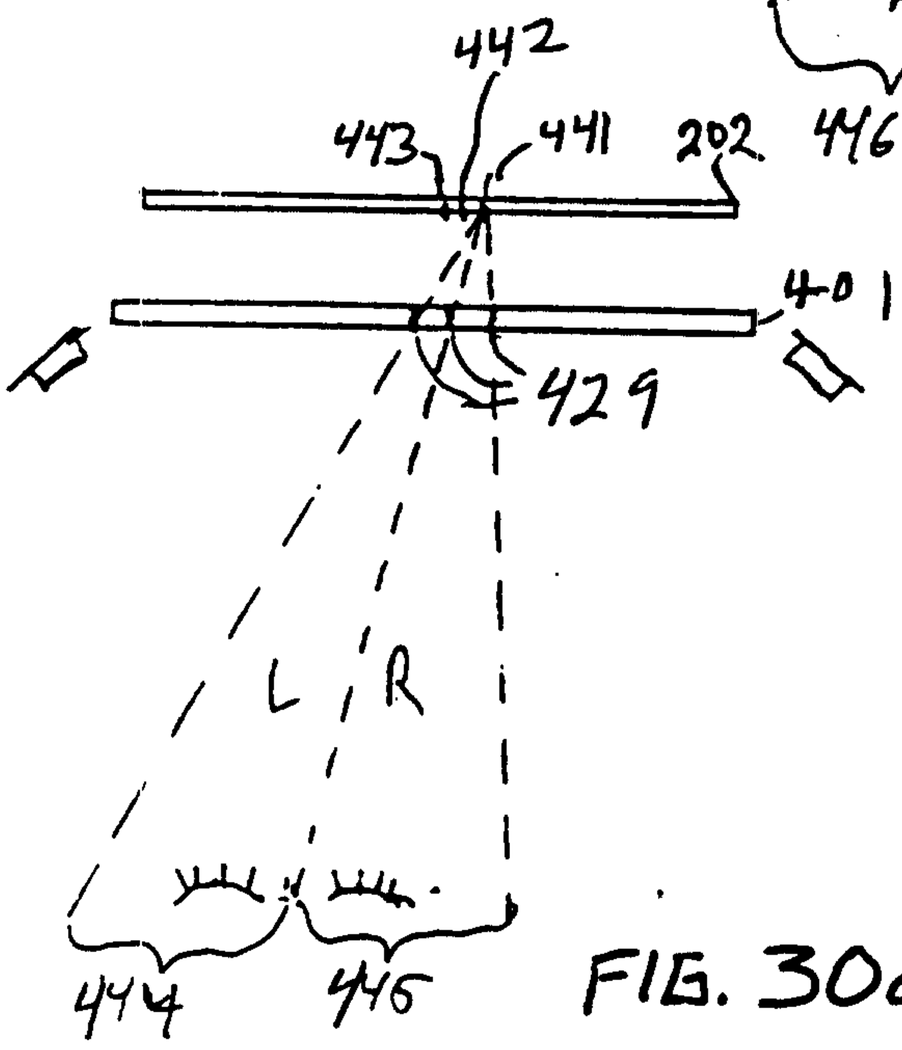

FIG. 30a

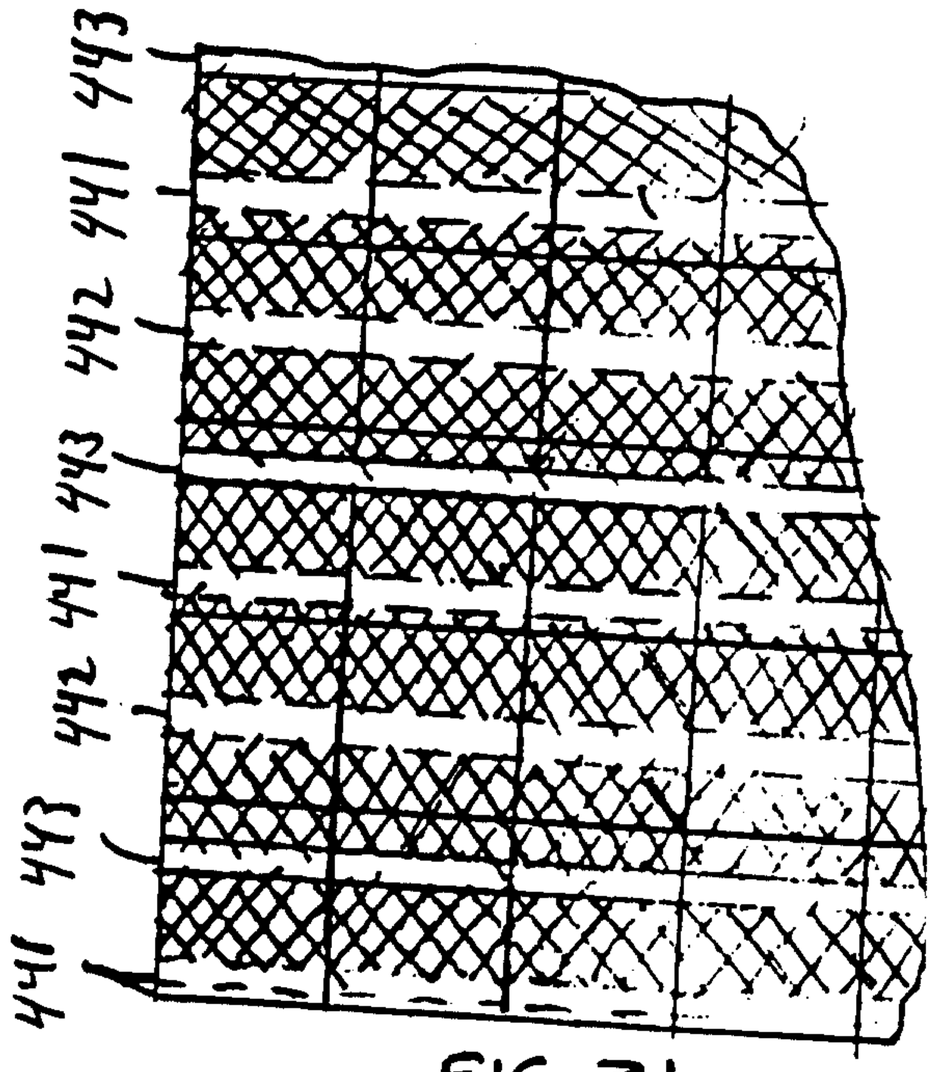

FIG. 31c

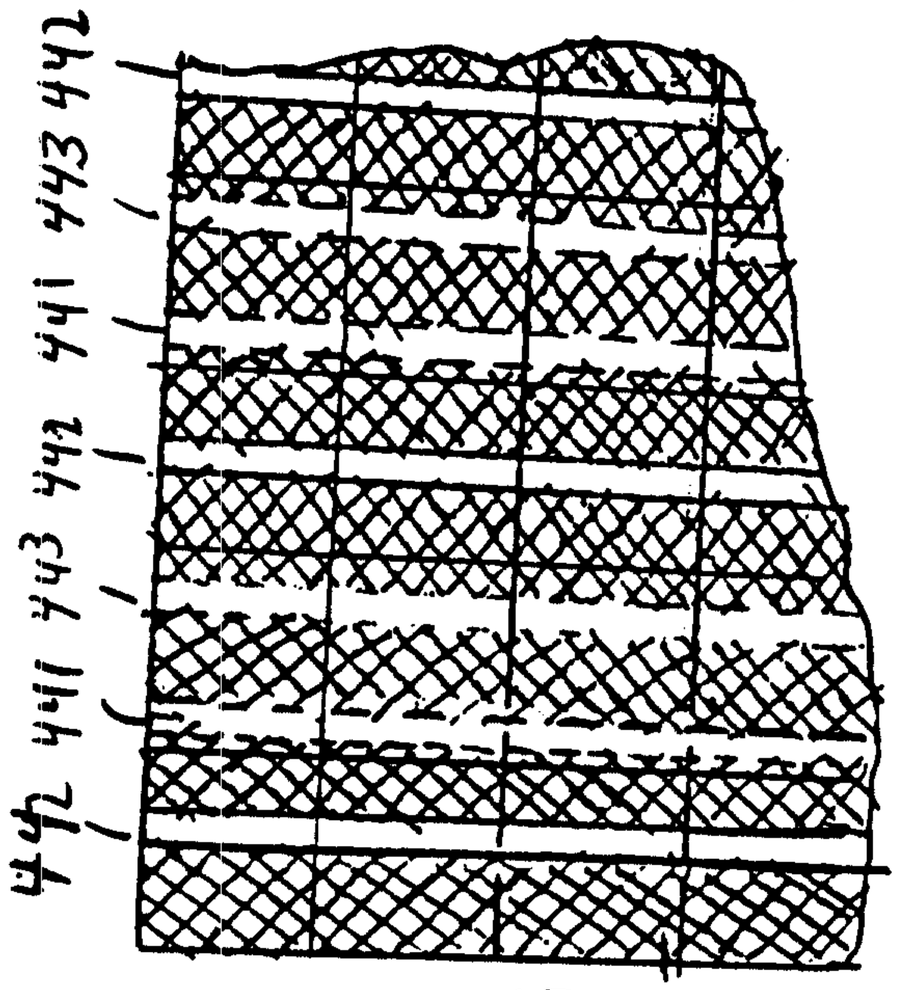

FIG. 31b

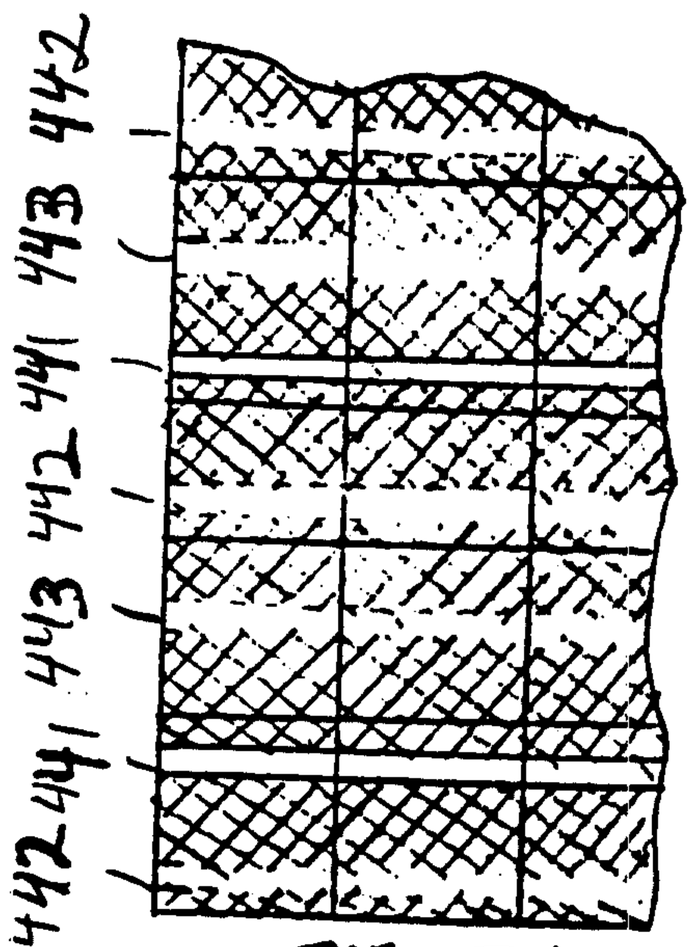

FIG. 31a

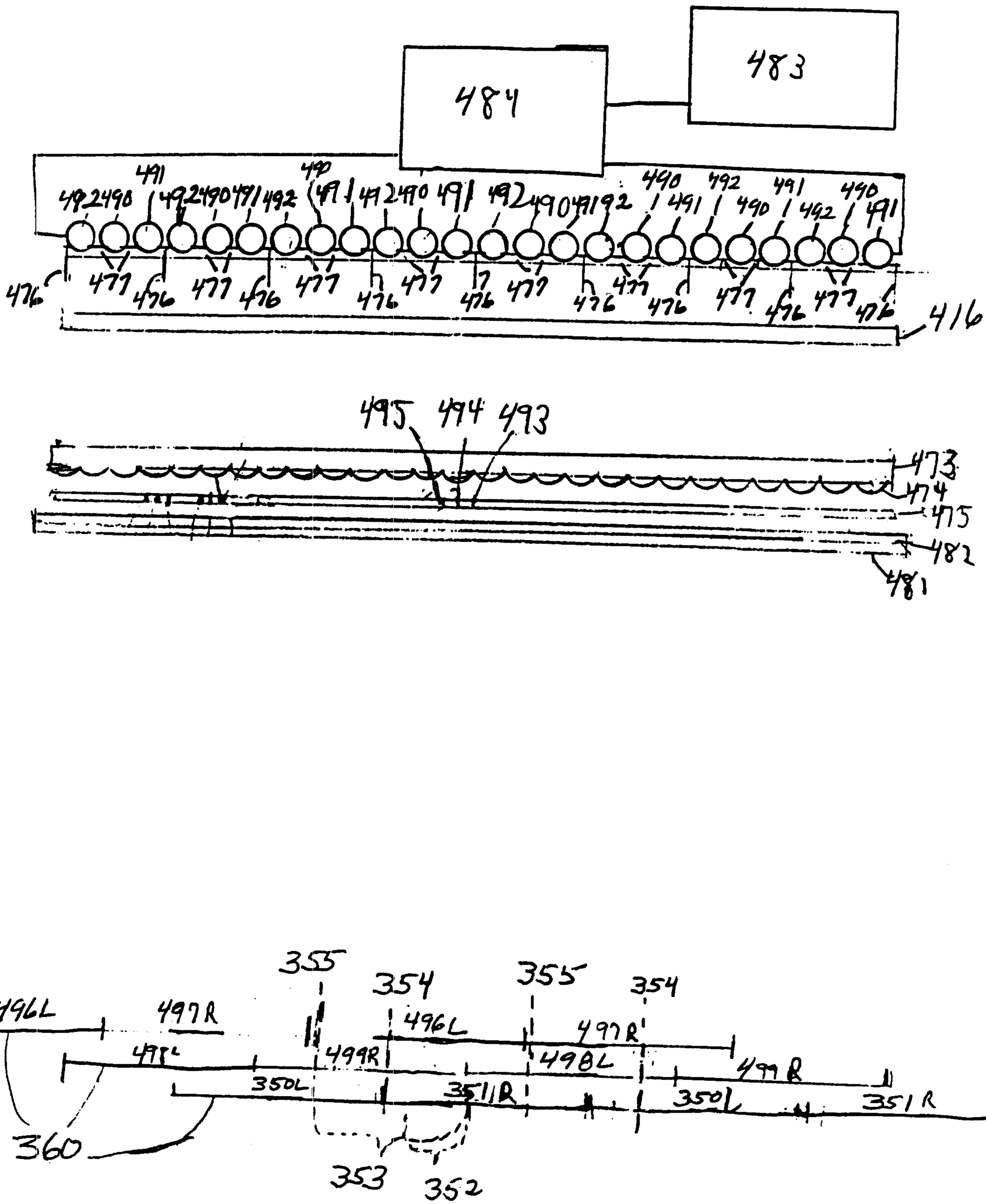
484
483
490
491
492
476
477
416
495
494
493
473
474
475
482
481
496L
497R
498L
499R
350L
351R
360
353
352

FIG. 32

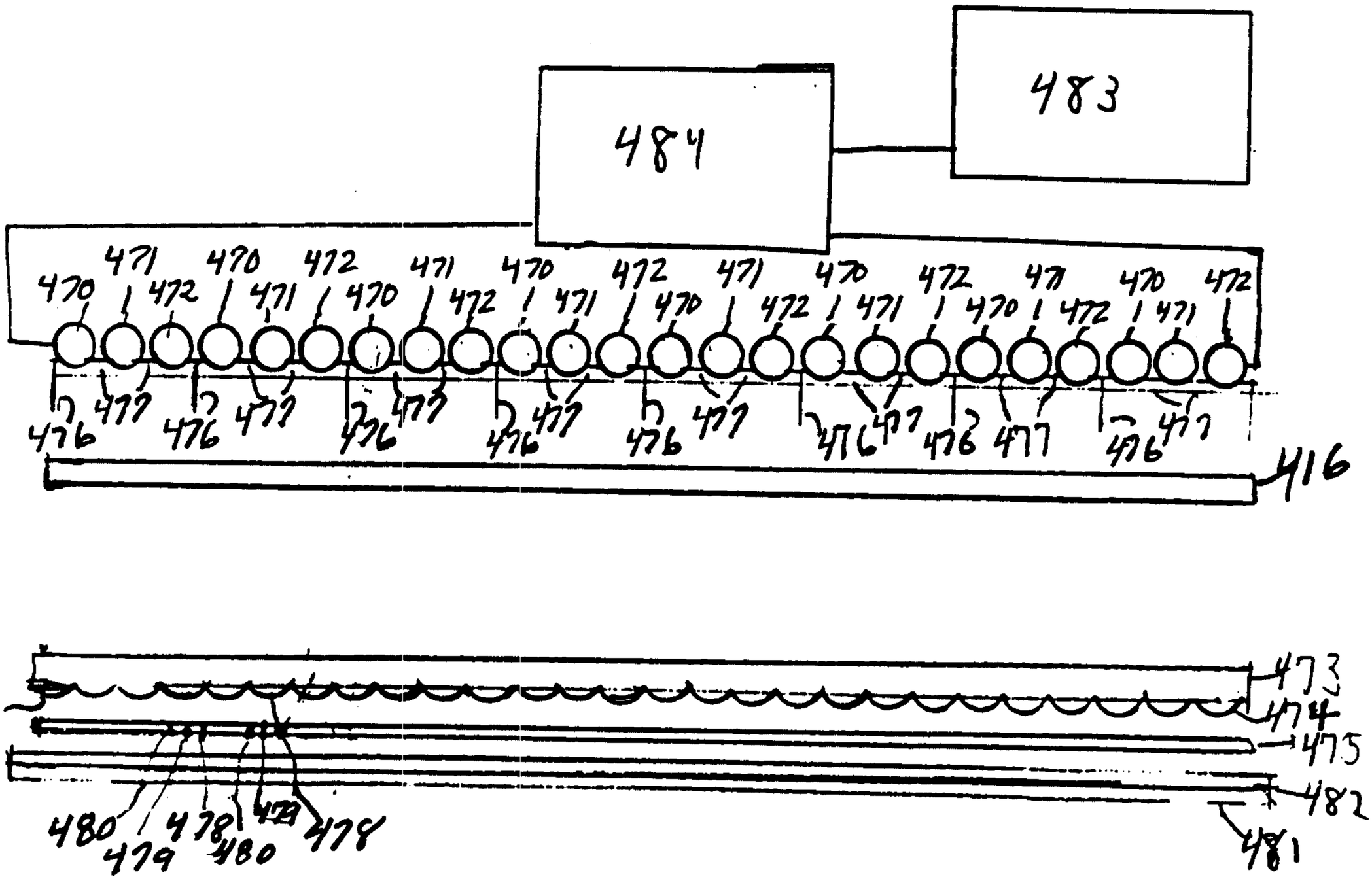

FIG. 33

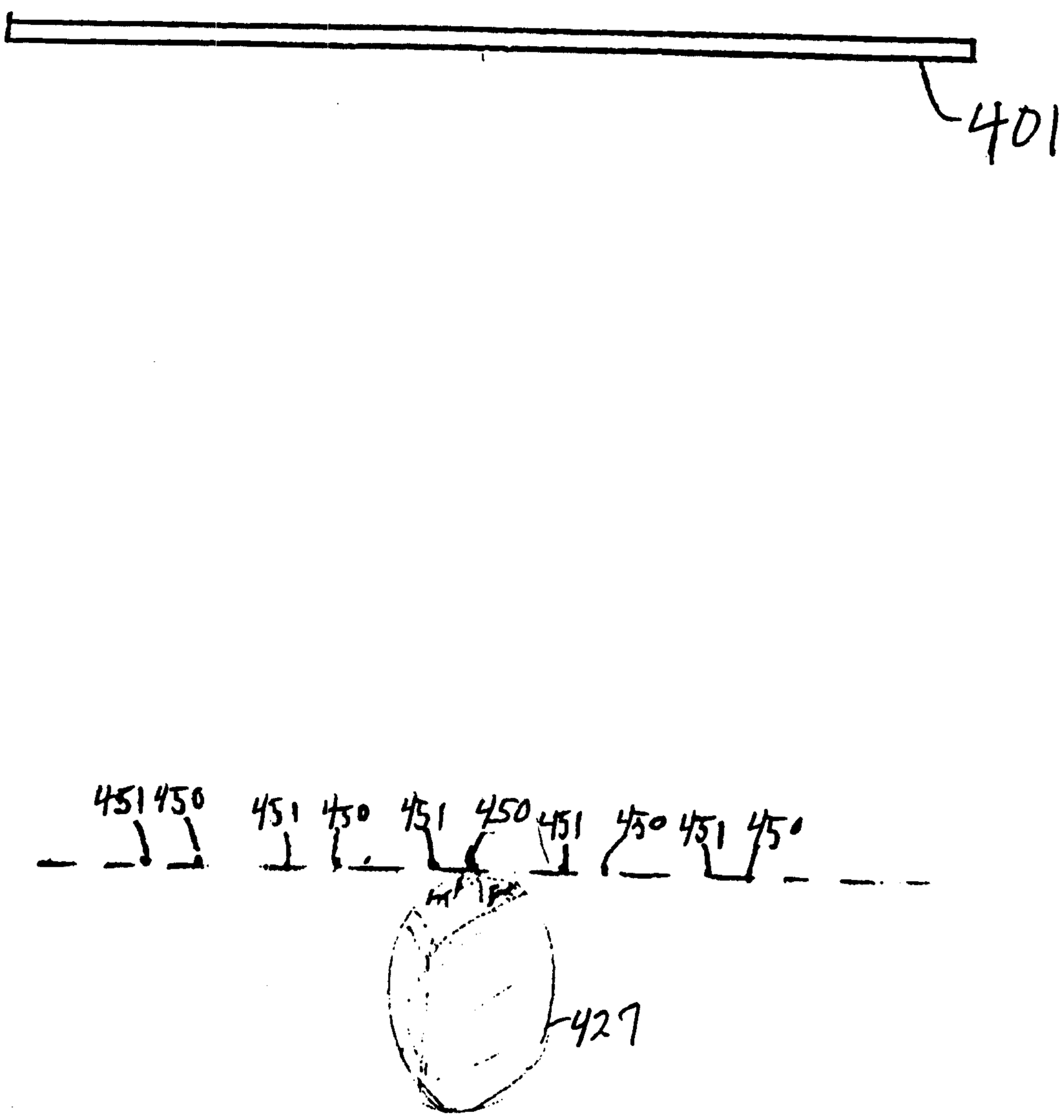

FIG. 34

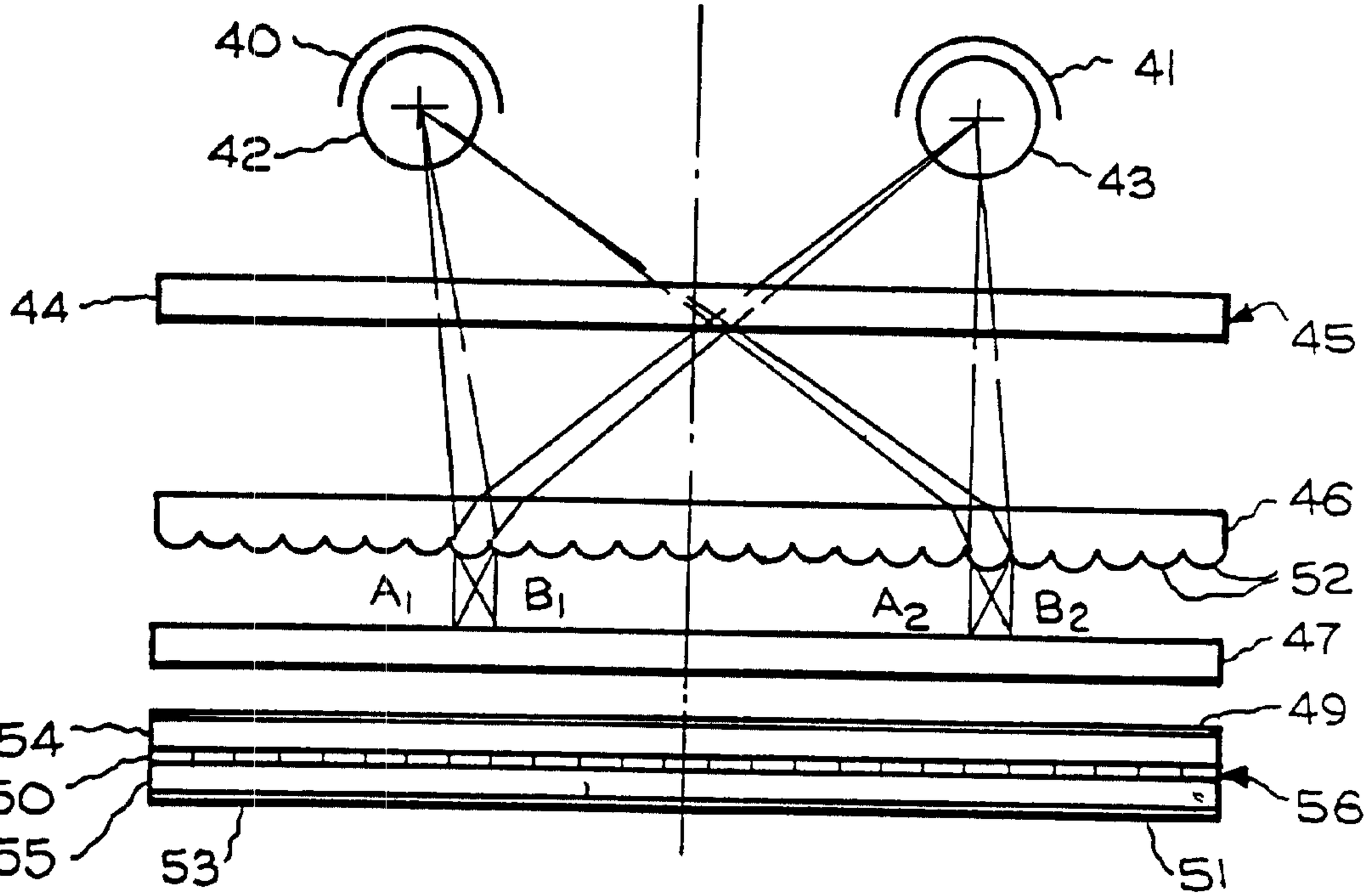
40
41
42
43
44
45
46
52
A1
B1
A2
B2
47
49
54
50
56
55
53
51