Feb. 9, 1943. H. W. LORD 2,310,742

TRANSFORMER

Filed July 19, 1940

Fig. 1.

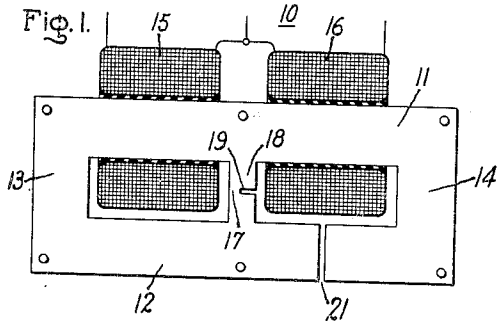

Fig. 2.

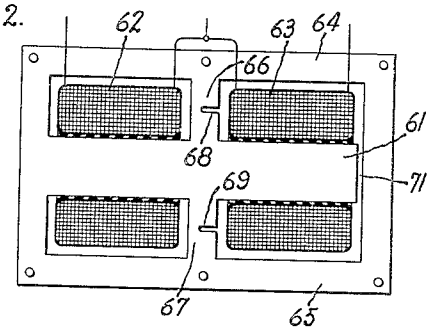

Fig. 3.

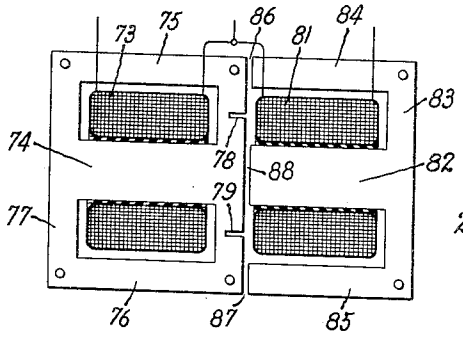

Fig. 4.

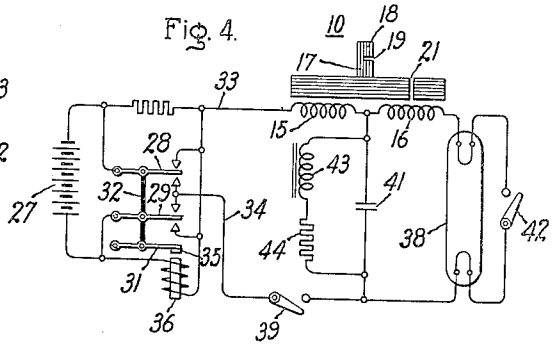

Fig. 5.

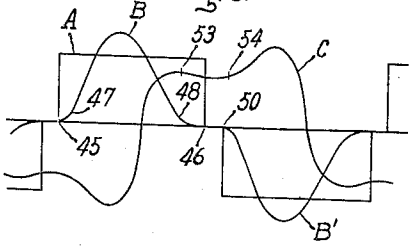

Fig. 6.

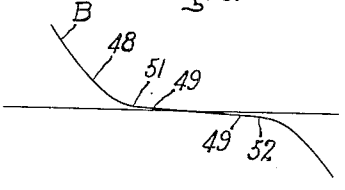

Fig. 7

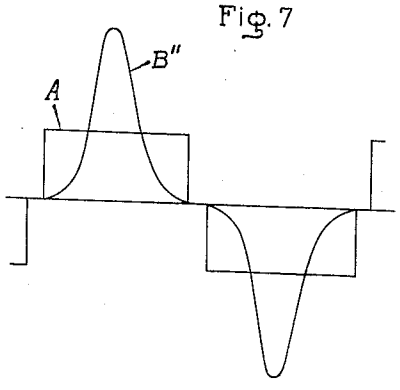

Inventor:
Harold W. Lord,
by Harry E. Dunham
His Attorney.

Patented Feb. 9, 1943

2,310,742

UNITED STATES PATENT OFFICE

2,310,742

TRANSFORMER

Harold W. Lord, Schenectady, N. Y., assignor to General Electric Company, a corporation of New York

Application July 19, 1940, Serial No. 346,343

2 Claims. (Cl. 171—119)

My invention relates to transformers and while it is not necessarily limited thereto, it is particularly adaptable for use in circuits for operating electric discharge lamps from sources of low voltage direct current.

For operating fluorescent lamps from a direct current source of supply such as in railway cars where the source of electric energy is the 32-volt lighting battery forming a well-known part of the car equipment, apparatus is provided for converting the low voltage direct current into an alternating current which usually includes an inverter such as a mechanical commutator and a transformer for raising the alternating current to the desired higher voltage for the lamp. In order to provide for the satisfactory operation of the inverter and the lamp it has usually been necessary to include in the transformer primary and secondary circuits various linear and non-linear reactors for controlling the current characteristics. While such individual units may be employed in the respective circuits, the multiplicity of parts results in high costs and excessive overall size and weight for the installation.

It is therefore an object of my invention to provide a new and improved transformer particularly suitable for use in a fluorescent lamp installation of the type referred to which eliminates the necessity for independent wave form controlling auxiliaries and which is light in weight, of relatively small size, and low cost.

My invention will be better understood from the following description taken in connection with the accompanying drawing and its scope will be pointed out with greater particularity in the appended claims.

In the drawing Fig. 1 is a cross sectional view of a transformer constructed in accordance with the present invention and Figs. 2 and 3 are similar views illustrating additional modifications thereof; Fig. 4 is a diagrammatic sketch illustrating a transformer of this invention embodied in a fluorescent lighting circuit; and Figs. 5, 6 and 7 show illustrative curves of wave forms obtained with the apparatus including the transformer of this invention.

Referring to Fig. 1, the transformer shown comprises a rectangular laminated core structure 10 having a winding leg 11 and an outer leg 12 connected by end yokes 13 and 14. Primary and secondary windings 15 and 16, respectively, are provided upon the winding leg 11 in a spaced relation. For controlling the wave shape of the primary current, as will be described more fully hereinafter, a magnetic shunt is provided between the winding coils and connecting the core legs 11 and 12 which shunt comprises a saturable portion 17 and a non-saturable portion 18 arranged in parallel. The non-saturable portion may be formed by providing a notch or air gap 19 extending only part way through the shunt as indicated. An air gap 21 is also provided in the outer leg 12 adjacent the secondary winding 16 as distinguished from the local magnetic circuit of the primary winding through the shunt for the purpose of decreasing the impedance of the circuit including the secondary winding as will be explained later in greater detail.

The features of the transformer may be best understood from a description of its mode of operation in a fluorescent lamp circuit. The circuit to be described is separately disclosed and claimed in my copending application Serial No. 327,072, filed March 30, 1940, and assigned to the assignee of the present application. In the circuit diagram of Fig. 4 the source of electrical energy is represented as the battery 27 which, for example, may be a 32-volt storage battery such as commonly comprises a part of the lighting equipment of a railway car. The voltage of the battery is converted into an alternating voltage by means of any suitable commutator which may be either of the rotary or vibrator types. I have shown such a vibrator type commutator having resilient switch blades 28 and 29 which are tied together and to the driving reed 31 by the insulating strip 32. The ends of the blades 28 and 29 engage the front and back contacts which connect with the feeder conductors 33 and 34 in the manner of an ordinary reversing switch, the front and back contacts for each blade being spaced as short a distance as possible and still obtain satisfactory operation. The outer or free end of the reed 31 is provided with the armature 35 which also provides a certain amount of inertia, and cooperating with the armature 35 is the driving magnet 36 which receives energy from the battery and is controlled by the blades and contacts in a well understood manner to cause the commutator to operate. Although the commutator may vibrate with any desired frequency, it is preferably so constructed that it shall operate with a frequency of approximately 60 periods per second. The open circuit voltage produced by the commutator is represented, for example, by the voltage curve A in Fig. 5 in which it will be seen that the short time intervals between the positive and the negative half-cycles are those due to the spacing of the front and back contacts of the commutator.

The feeder circuit is arranged to supply energy to a load circuit, such as an electric discharge lamp represented at 38 through the transformer 10 which serves the double function of ballasting the lamp and causing the current wave drawn from the source through the commutator always to be of such a character that sparking at the commutator contacts is avoided regardless of the functioning of the lamp. Connected in series with the primary winding 15 to be supplied from the feeder circuit 33, 34 through the control switch 39 is the capacitor 41, the winding and the capacitor forming a resonant circuit tuned to a frequency which is slightly higher than that of the commutator. At the beginning and at the end of each half-cycle of current in the resonant circuit, that is, when the primary current is small, the portion 17 of the magnetic shunt paralleling the air gap is able to carry the magnetic flux without saturation, hence the inductive property of the resonant circuit is relatively high and the resulting resonant frequency of the circuit is low. During the greater portion of each half-cycle of the current, however, the shunt is saturated and a result the inductive property of the circuit is low and the resulting resonant frequency is high.

Inasmuch as the natural frequency of the resonant circuit thus changes during each half-cycle, it may be termed a non-linear resonant circuit.

The discharge device 38 is connected in series with the secondary winding 16 across the capacitor 41 so that the energy received by the lamp is supplied jointly by the secondary winding and the capacitor 41 and directly from the feeder through the primary winding. The discharge lamp may be of any suitable type and is represented by way of example as having heated electrodes at the ends thereof. For the purpose of initially heating the electrodes before starting the lamp, I have shown by way of example the short-circuiting switch 42 which is initially closed and after the electrodes have become heated to an electron emitting temperature is opened thereby causing the lamp to start by reason of the inductive kick of the secondary winding. It will be understood that various automatic means may be provided for closing the switch 42 for a predetermined time when the circuit is energized and subsequently opening it to cause the lamp to start.

To insure a greater uniformity of operation of the above described apparatus under conditions of excess voltage and to insure the maintenance of a uniform frequency of the resonant current under conditions of large variations of load, the resonant circuit is provided with a non-linear shunt around the capacitor 41 comprising the saturable core reactor 43 and the resistor 44. Under conditions of normal voltage of the source of supply the reactor 43 will operate with a flux density therein which is a little below the point of saturation. However, any material increase in the voltage of the source will cause a saturation of this reactor thereby decreasing impedance of the shunt circuit of which it forms a part to compensate for the effect on the resonant current of such voltage increase. The shunt moreover prevents any material change in the frequency of the resonant current should the load suddenly change, as for example, by the removal of the lamp.

Referring now to the wave forms comprising Figs. 5 and 6, at the instant that the commutator contacts close in one position thereof, which point is indicated on Fig. 5 at 45, an oscillatory current begins to flow from the battery, through the commutator, the feeder and the resonant circuit which includes the winding 15 and the capacitor. Inasmuch as the resonant circuit is tuned to a frequency slightly higher than that of the commutator only the first half-cycle of the oscillatory current passes before the commutator contacts open. The shape of this half-cycle is represented by B, the times of the closing and opening of the circuit by the commutator being represented respectively by the points 45 and 46. During the greater part of this half-cycle the shunts are saturated, hence, the inductance of the winding 15 at that time is relatively low. Near the beginning and the end of the half-cycle, however, when the value of the current is small the magnetic shunts are able to carry the flux without saturation. At these times, therefore, the inductance of the winding 15 has a higher value, namely, that corresponding to a desaturated condition of the magnetic circuit. The effect of the change from one inductance value to another is to vary the rate of change of the current, the effect being shown by the curved portions 47 and 48 of the current wave. The rate of change of the current finally reaches a very low value represented by the flat portion 49 of the curve, see Fig. 6, into which the curved portion 48 merges. In this figure I have represented on a larger scale the form that the curve B would take in the zero part thereof were the circuit not opened by the commutator. The current passes through zero in this flat portion which portion makes such a small angle with the zero axis that for an appreciable interval before and after the time of actual zero value the current is practically zero, in fact is so small that only a minute spark, if any, is produced if the circuit is opened at any instant during that interval.

The opening of the circuit by the commutator may therefore occur at any point along the flat portion 49 of the current curve, for example, anywhere between the points 51 and 52 of Fig. 6 without causing detrimental sparking at the commutator contacts. By reason of the length of the flat portion it becomes unnecessary to use special care to insure that the time of interruption of the circuit shall occur exactly at the time of zero current; moreover because of it a safe margin is provided to insure against commutator sparking by reason of small variations that may occur in the frequency of the commutator and the resonant circuit and in the structural features of the apparatus. When the commutator contacts close in the other position, as at the point 50, in Fig. 5, a similar half-cycle of current but of the opposite polarity, indicated at B', is drawn from the battery through the commutator, the interruption of the current at the end of each half-cycle occurring at a corresponding point in the flat portion 49 of the current wave.

Curve C drawn to a different scale than that of the curve B, represents the wave form of the current flowing through the lamp which current is supplied principally by the secondary winding of the transformer but during the intermediate portion thereof, approximately between the points 53 and 54, is supplied by the capacitor 41. Because the discharge voltage of the condenser is relatively low, it is necessary that the impedance of the transformer secondary winding be also relatively low in order that the lamp current C will

be kept sufficiently high for maintaining the lamp arc during the period between points 53 and 54 on the curve. By means of the air gap 21 in the magnetic circuit adjacent the transformer secondary winding the desired low impedance for the secondary circuit is obtained. It will be noted that this lamp current curve C is very steep where it crosses the zero axis, the shape of the curve being due to the transformer structure just described. An important advantage which results from obtaining a curve having such a steep slope is that the light produced by the lamp goes through zero very rapidly, so rapidly in fact that flicker of the lamp is reduced to an extremely low value.

The curves B and B' represent the current waves drawn from the feeder with the lamp in normal operation. Should the lamp be removed or rendered inoperative the current curve would then become somewhat more peaked such as is represented, for example, by the curve B'' of Fig. 7. Although the current under such conditions is more peaked than under the normal lamp operating condition that portion of the current curve adjacent the zero axis, namely the flat portion, is substantially the same. Moreover, that portion of the current curve also remains substantially the same when the lamp is short circuited by the starting switch. Thus the production of a flat portion in the current wave where it passes through zero and the positioning of that portion to include the point of interruption of the commutator is substantially independent of the functioning of the load.

It will be apparent from the description given that the transformer may be constructed in various forms other than that shown in Fig. 1. In Fig. 2, the transformer is provided with a shell type core having a central winding leg 61, upon which are the primary 62 and secondary winding 63, and a pair of outer legs 64 and 65. Magnetic shunts 66 and 67 having notches or air gaps 68 and 69, respectively, extending part way therethrough extend between the windings connecting the winding leg and outer legs. An air gap 71 is provided between the end of the winding leg 61 adjacent the secondary winding and the yoke connecting the outer legs 64 and 65 to provide the desired leakage reactance for this winding.

For greater flexibility and ease of assembly of the transformer, I prefer to provide separate core structures for the two windings such as shown in Fig. 3. In this modification the primary winding 73 is arranged upon a core comprising a winding leg 74 and outer legs 75 and 76 connected by an end yoke 77. Connecting the opposite ends of these legs are the shunts 78 and 79 similar to those previously described. The secondary winding 81 is arranged upon the winding leg 82 which is connected by yoke 83 to the outer legs 84 and 85. The two core parts are suitably clamped together with air gaps 86 and 87 between the corresponding outer legs and an air gap 88 between the winding legs of the two parts. It is obvious that the air gaps 86, 87 and 88 may be adjusted with a high degree of accuracy in the assembly of the transformer as the two core parts are clamped together.

I have chosen the particular embodiments described above as illustrative of my invention, and it will be apparent that various further modifications may be made without departing from the spirit and scope of my invention which modifications I aim to cover by the appended claims.

What I claim as new and desire to secure by Letters Patent of the United States is:

1. A transformer device for supplying an alternating current potential to a load from a source of periodic voltage, said device comprising a primary and a secondary winding, a core structure for said windings including a magnetic shunt extending between said windings and having a saturable portion in a closed magnetic circuit for said primary winding and designed to saturate for a substantial portion of each half-cycle of said supply, said magnetic shunt having a non-magnetic gap in parallel arrangement with respect to said saturable portion whereby the rate of primary current change is reduced near the beginning and end of each half-cycle, said gap and said saturable portion having a length such that said shunt provides for substantial flux leakage between said primary and said secondary windings during the portion of each half-cycle that said saturable portion is saturated thereby to provide ballast impedance in the circuit of said secondary winding and a non-magnetic gap in the local magnetic circuit for said secondary winding to reduce the impedance thereof.

2. A transformer device for supplying an alternating current potential to a load from a source of periodic voltage, said device comprising a primary winding, a secondary winding and a core structure for said windings including a series magnetic circuit common to both said windings and a shunt magnetic circuit for controlling the impedance characteristics of both said primary and said secondary windings, said shunt comprising parallel saturable and nonsaturable portions, said saturable portion being designed to be unsaturated for an interval at the beginning and end of each half-cycle and to be saturated for the intermediate portion of each half-cycle, said saturable portion and said nonmagnetic portion having a length such that the leakage flux traversing said shunt increases substantially during the portion of each half-cycle that said saturable portion is saturated so that said secondary winding has substantial series impedance and provides a ballast for said load.

HAROLD W. LORD.