Feb. 16, 1926. 1,573,613

R. McC. JOHNSTONE

METHOD OF SPACING CORES

Filed May 2, 1923 4 Sheets-Sheet 1

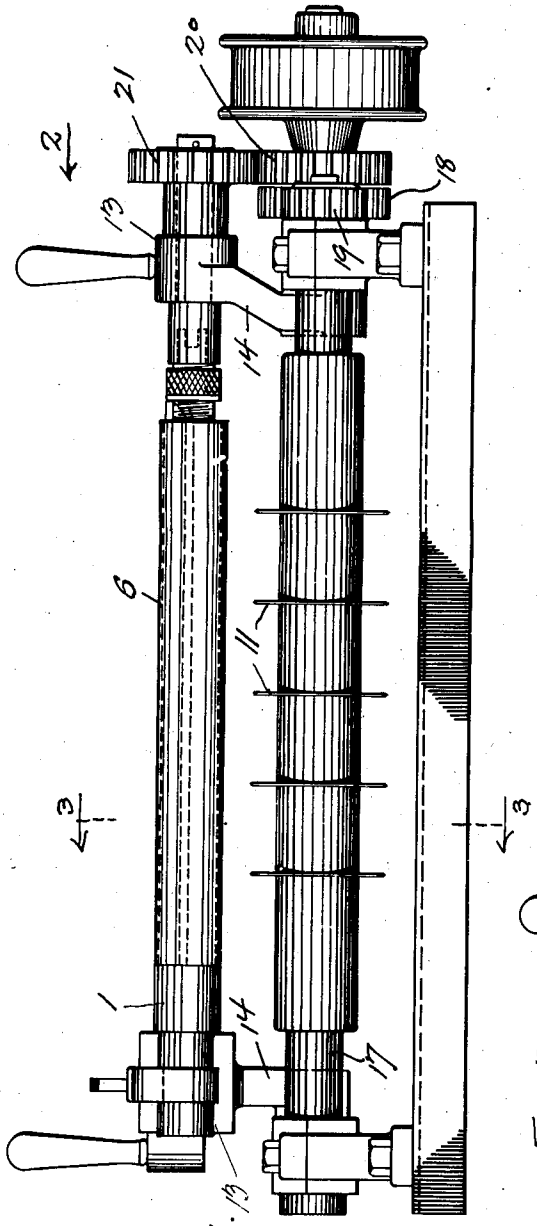

Fig. 1.

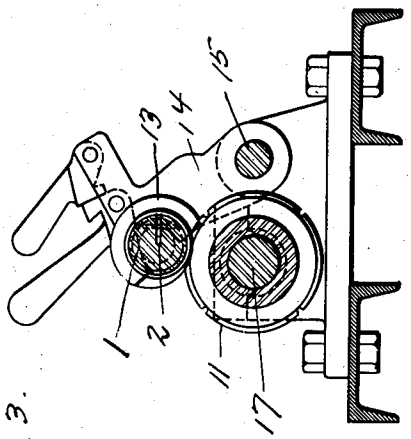

Fig. 3.

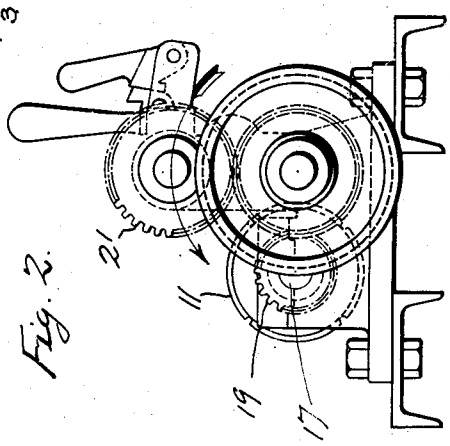

Fig. 2.

INVENTOR
Robert McC Johnstone
BY
Fred N Beeken
ATTORNEY

Feb. 16, 1926. 1,573,613

R. McC. JOHNSTONE

METHOD OF SPACING CORES

Filed May 2, 1923 4 Sheets-Sheet 2

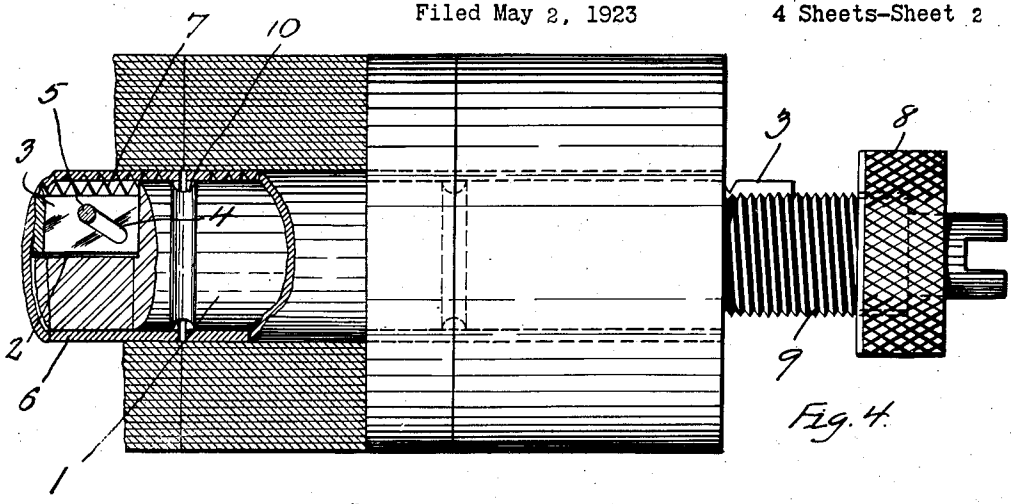

Fig. 4.

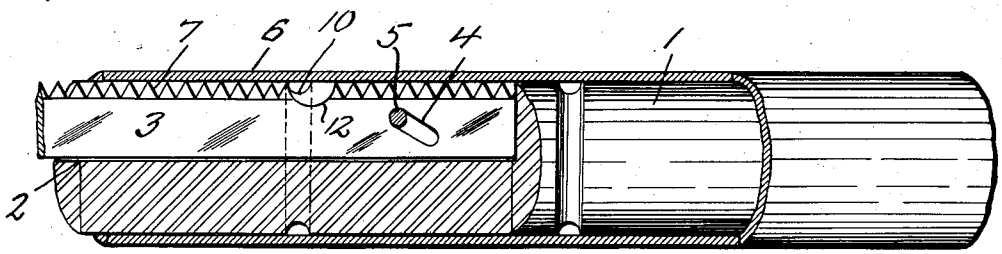

Fig. 5.

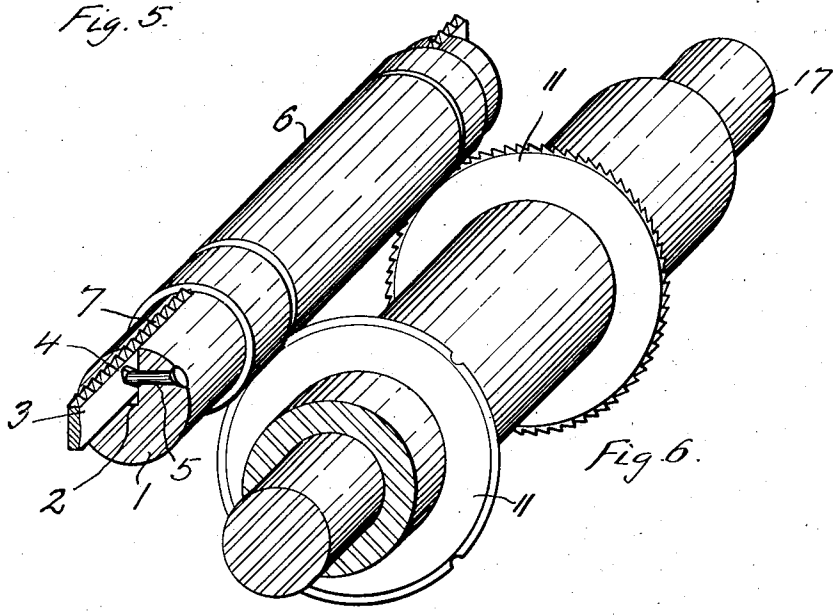

Fig. 6.

INVENTOR
Robert McC Johnstone
BY
Fred V Beeken
ATTORNEY

Feb. 16, 1926. 1,573,613

R. McC. JOHNSTONE

METHOD OF SPACING CORES

Filed May 2, 1923 4 Sheets-Sheet 3

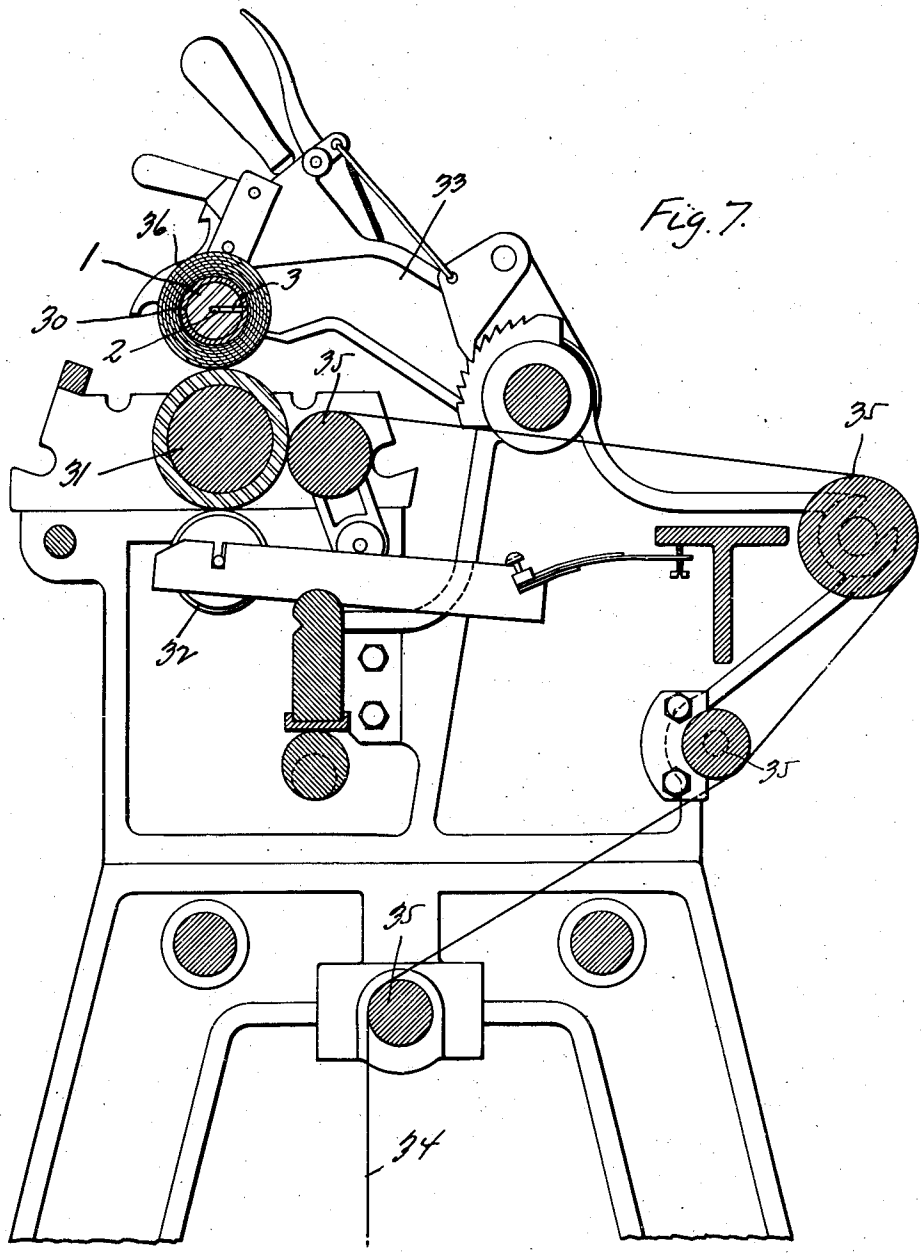

INVENTOR
Robert McC Johnstone
BY
Paul Rueckert
ATTORNEY

Feb. 16, 1926. **1,573,613**

R. McC. JOHNSTONE

METHOD OF SPACING CORES

Filed May 2, 1923 4 Sheets-Sheet 4

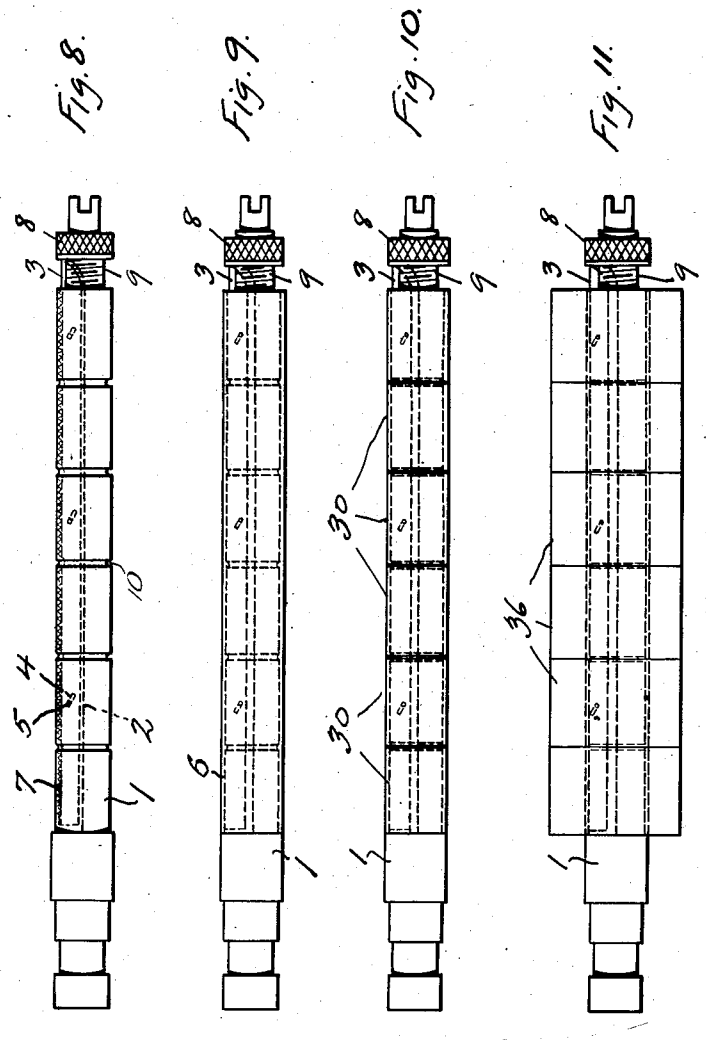

INVENTOR
Robert McC Johnstone
BY
ATTORNEY

Patented Feb. 16, 1926.

1,573,613

UNITED STATES PATENT OFFICE.

ROBERT McC. JOHNSTONE, OF ROSELLE PARK, NEW JERSEY, ASSIGNOR TO CAMERON MACHINE COMPANY, OF BROOKLYN, NEW YORK, A CORPORATION OF NEW YORK.

METHOD OF SPACING CORES.

Application filed May 2, 1923. Serial No. 636,133.

To all whom it may concern:

Be it known that I, ROBERT McC. JOHNSTONE, a citizen of the United States, and a resident of Roselle Park, in the county of Union and State of New Jersey, have invented certain new and useful Improvements in Methods of Spacing Cores, of which the following is a specification.

This invention relates to a method for spacing a number of individual cores of paper or cardboard or the like on a shaft in a machine such as a slitting and winding machine.

In certain types of machines for slitting and winding flexible material such as paper, cloth, etc. it is customary to wind the slitted material on a plurality of paper cores arranged in side by side relation on a winding shaft. It will be understood that, if overlapping of adjacent edges of the slitted sections of flexible material is to be avoided, the cores must be spaced very accurately with respect to the line of severance between said sections; that is with respect to the slitting means.

In the art, as heretofore practiced, it has been customary to take a relatively long core member or tube, then to sever it into a plurality of cores and then to mount such cores, in proper spaced relation to the slitting means, on the winding shaft of a slitting and winding machine. And it is customary for the user of the slitting and winding machine to buy these cores cut to a given length. Under commercial conditions, as they exist, it is not possible to obtain sufficiently accurately cut cores so that when mounted on a winding shaft they will come in register with the slitted sections of flexible material, and the result is interweaving of adjacent rolls of rewound material.

The main object and feature of this invention is to overcome this difficulty and to provide a method whereby the cores may be made to accurately register with the slitted sections.

Accordingly the invention consists principally in a new method whereby a relatively long core member or tube is secured to a winding shaft, after which the tube is subdivided into a group of cores, these groups being left undisturbed on the winding shaft. It will be understood that many different means may be employed in carrying this invention into effect. For instance, the subdividing of the tube into a group of cores may be done by cutters mounted in the winding machines but, preferably, and as herein shown, a separate core cutting machine is employed in which the winding shaft, carrying the tube, is inserted, and, after the tube is cut into cores, the winding shaft with the core group is inserted in the winding machine. It will be understood that, if the cutters of the core cutting machine are spaced to correspond with the spacing of slitting elements of the slitting and winding machine, the cores will be in register with the slitted sections of flexible material.

Other features of invention will appear as the specification proceeds.

In the accompanying drawings the invention is disclosed in a concrete and preferred form in which

Fig. 1 is a front elevation of a core cutting machine adapted to be used in connection with my invention.

Fig. 2 is an end view looking in the direction of arrow 2 of Fig. 1.

Fig. 3 is a vertical sectional view on the line 3—3 of Fig. 1.

Fig. 4 is a detail view, partly in section, of one end of a winding shaft with cores and coils of flexible material in position.

Fig. 5 is a detail view, partly in section, of a portion of a winding shaft with a tube in position before the latter is subdivided into sections.

Fig. 6 is a perspective view of the winding shaft and core cutting elements.

Fig. 7 is a vertical sectional view of one type of slitting and winding machine that may be used in connection with the invention.

Figs. 8, 9, 10 and 11 are views in elevation of the winding shaft, showing the different steps involved in the method of the present invention.

Referring to Figs. 4, 5, and 6, reference character 1 denotes a winding shaft having a longitudinal groove 2 in which clamping member 3 is seated. Said clamping member is slidable longitudinally in the groove of the shaft and is also capable of outward movement. Any suitable means may be employed for this purpose, but preferably member 3 is provided with elongated, oblique cam slots 4 through which project pins 5 fixed in the shaft. It will be under-

stood that by moving member 3 lengthwise the cam action between the pins and slots is such that member 3 moves outwardly beyond the outer surface of the shaft so that, if a tube as 6 has been placed upon the shaft, serrated edges 7 of member 3 will become imbedded in the soft interior surface of said tube and will hold said tube firmly in position. A convenient means for effecting the lengthwise movement of member 3 is here shown in the form of threaded member 8 fitting on reduced and threaded portion 9 of the winding shaft. By rotating said member 8 in one direction, the clamping member may be moved lengthwise in one direction and, by rotating member 8 in the other direction, gravity will restore the clamping member to its original position. Shaft 1 is further provided with circumferential grooves 10 that register with core cutting elements 11 of the core cutting machine; and member 3 is provided with cut-away portions 12 that come into alinement with grooves 10 when said member 3 occupies its protruding position so that clearance for cutting elements 11 may be obtained.

Normally member 3 will occupy the position shown in Fig. 8, that is, below the outer surface of the shaft. A relatively long cardboard tube 6 is then mounted on the shaft and member 3 is caused to clamp said tube as indicated diagrammatically in Fig. 9. The shaft carrying the tube is now inserted in bearings 13 of the core cutting machine shown in Figs. 1, 2 and 3. Said bearings are carried by rocker arms 14 swinging on center 15 so that shaft 1 and tube 6 may be rocked into engagement with a set of cutters 11 carried on a rotatable shaft 17. Said cutters are driven from shaft 15 by means of spur-gear 18 and pinion 19 and shaft 1 is also driven, but at a different speed from that of shaft 17, by means of spur-gears 20 and 21 so as to insure every portion circumferentially of the tube being presented to cutters 11. Cutters 11 are spaced to match the spacing of the slitting elements of a slitting and winding machine, and it will now be understood that when shaft 1 and tube 6 are pressed against cutters 16 a group of cores 30 as shown in Fig. 10 will be produced. Cutters 11 may be of different constructions. Two different types are shown in Fig. 6.

Shaft 1, with the core group in undisturbed position, is now removed from the core cutting machine and is mounted as the winding shaft of a winding machine. This machine may be of many different constructions. In Fig. 7 is shown a vertical cross section of a well-known type of Cameron winder, known as a combination winder and fully disclosed in U. S. Letters Patent No. 1,256,499. As shown in Fig. 7, the slitting elements here consist of score cut means comprising a backing roller 31 and score cutters 32. Shaft 1 with core group 30 is mounted in arms 33 which rise as the material accumulates on the shaft. The material 34 to be slitted is led over guide rollers 35 to backing roller 31 and is slitted by score cutters 32 after which the slitted sections 36 pass to cores 30 of shaft 1.

It will be understod that if cutting elements 11 of the core cutting machine are spaced to correspond with the transverse spacing of a number of slitters like 32 of the slitting machine, the slitted sections of material will be led in proper register to the cores. In Fig. 11 is disclosed diagrammatically a number of coils of wound material 36 on cores 30. The winding operation being completed, shaft 1 may now be removed from the winder, member 3 withdrawn from engagement with cores 30, and the coils and cores are then readily removable from the shaft.

The core supporting means are not claimed in this application but form the subject matter of application Ser. No. 23,706, filed April 16, 1925.

I claim:

1. The method of spacing individual cores on a winding shaft which consists in securing a relatively long core member on the shaft, and then subdividing said core member into a group of individual cores while held on the shaft, which group is left undisturbed on the shaft.

2. The method of spacing individual cores on a winding shaft which consists in securing a relatively long core member on the shaft, then subdividing said core member into a group of individual cores while held on the shaft, and then inserting the shaft, with the group of cores undisturbed, in a winding machine.

3. The method of spacing individual cores on a winding shaft which consists in spacing the cutting mechanism of a core cutting machine to correspond with the slitting elements of a slitting and winding machine, then subdividing a relatively long core member into a group of cores while held on a winding shaft inserted in the core cutting machine, and then transferring the winding shaft with the group of cores undisturbed to the slitting and winding machine.

Signed at Brooklyn, in the county of Kings, and State of New York, this 26th day of April, 1923.

ROBERT McC. JOHNSTONE.