March 30, 1954 R. B. IMMEL ET AL 2,673,468

LIMIT SWITCH OPERATING MECHANISM

Filed July 28, 1951 2 Sheets-Sheet 1

Fig.1.

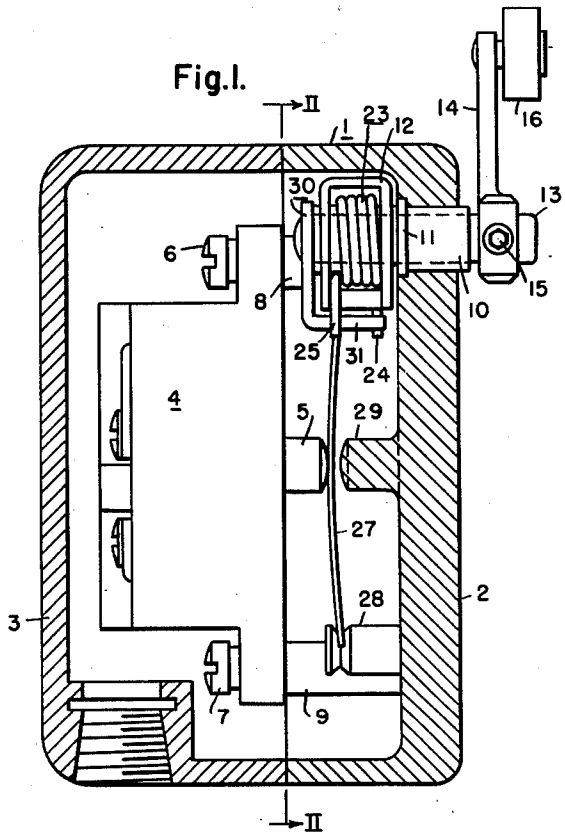

Fig.2.

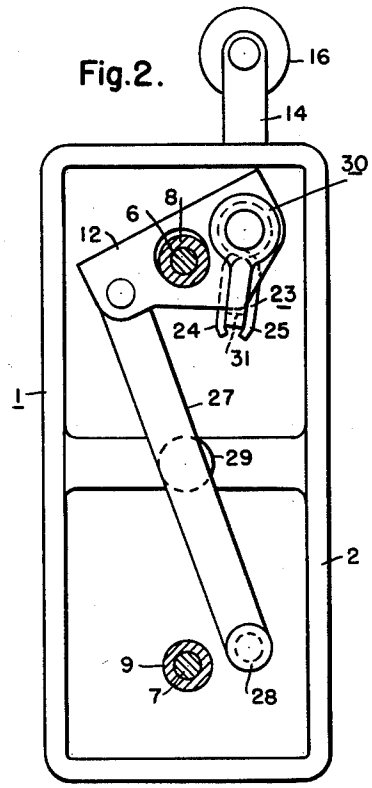

Fig.3.

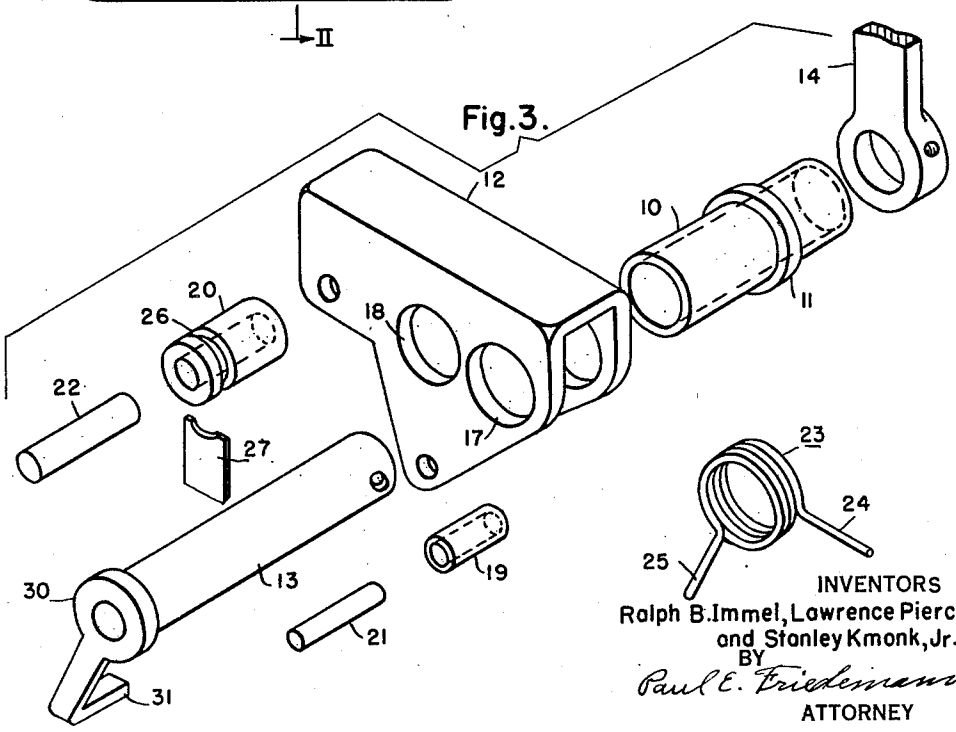

INVENTORS
Ralph B. Immel, Lawrence Pierce
and Stanley Kmonk, Jr.
BY
Paul E. Friedemann
ATTORNEY

March 30, 1954 R. B. IMMEL ET AL 2,673,468

LIMIT SWITCH OPERATING MECHANISM

Filed July 28, 1951 2 Sheets-Sheet 2

Fig. 4.

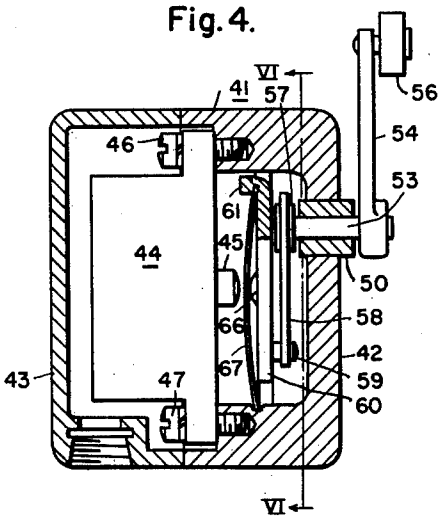

Fig. 5.

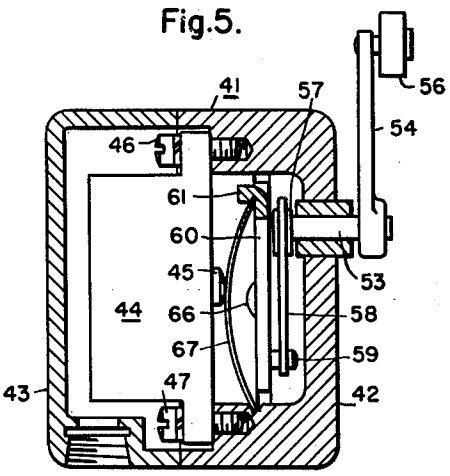

Fig. 6.

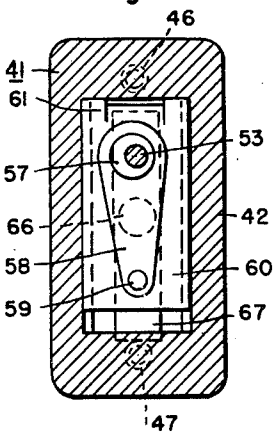

Fig. 7.

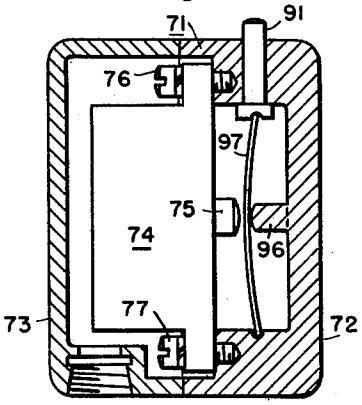

WITNESSES:

E. A. McCloskey

Wm. L. Groome

INVENTORS

Ralph B. Immel, Lawrence Pierce and Stanley Kmonk, Jr.

BY

Paul E. Friedemann

ATTORNEY

Patented Mar. 30, 1954

2,673,468

UNITED STATES PATENT OFFICE

2,673,468

LIMIT SWITCH OPERATING MECHANISM

Ralph B. Immel and Lawrence Pierce, Williamsville, N. Y., and Stanley Kmonk, Jr., Wilmerding, Pa., assignors to Westinghouse Electric Corporation, East Pittsburgh, Pa., a corporation of Pennsylvania

Application July 28, 1951, Serial No. 239,142

13 Claims. (Cl. 74—99)

1

Our invention relates to switches and, more particularly, to switch operating mechanisms, as applied to limit switches and other applications.

Limit switch operating mechanisms are well known in the prior art, but since limit switch service, particularly for some applications, requires many operations per minute over long periods of time, the useful life in terms of number of operations is rather limited for most prior art devices. Further, most prior art limit switch operating mechanisms are clumsy, bulky, and expensive, and very often the mechanisms do not take advantage of existing switches that may be operated by the operating mechanisms.

One broad object of our invention is the provision of a simple, low cost, and reliable operating mechanism for a well known plunger operated snap switch.

A more specific object of our invention is the provision of an operating mechanism for translating the rotary motion of a lever actuated by some machine, as a planer platen, into linear motion perpendicular to the plane of the rotary motion.

A specific object of our invention is the provision of applying linear motion to one end of a spring fixed in position at the other end along the axis of a spring to thus flex the spring to produce a movement of the mid-portion of the spring perpendicular to the spring axis.

A further object of our invention is the provision in the mechanical structure of a limit switch or similar device, an elongated slightly bowed leaf spring mounted on a base so that the ends may be moved toward and away from each other to thus produce a highly amplified mechanical movement near the middle of the spring at substantially right angles to the direction of relative movement of the ends of the spring.

The objects stated are merely illustrative of other objects of our invention that will become more apparent from a study of the following specification and the accompanying drawings, in which:

Figure 1 is a vertical section through the housing showing a side view of an embodiment of our invention;

Fig. 2 is a view along line II—II showing a rear view of our invention;

Fig. 3 is an exploded view of the limit switch operating mechanism;

Fig. 4 is a vertical sectional view through the housing showing a side view of a modification of our invention, with the parts in a non-operated position;

2

Fig. 5 is a vertical sectional view through the housing showing the parts, of the showing in Fig. 4, in an activated position;

Fig. 6 is a vertical sectional view on line VI—VI of Fig. 4; and

Fig. 7 is a vertical sectional view through the housing showing a side view of a further modification of our invention.

From the showing in Fig. 1, it will be apparent that the base 1 consists of the front or cover portion 2 and the rear portion 3. The rear portion houses the switch 4 and may be designated the switch casing. This switch 4 is of a well-known plunger actuated type with the plunger 5 projecting from the switch casing and the switch operating with a snap action upon an axial movement of the plunger 5 through a given distance. The switch 4 is rigidly mounted on the cover 2 by means of the bolts 6 and 7 threaded into the cover 2. Suitable sleeves 8 and 9 of selected length surround the bolts 6 and 7, respectively, and thus provide for the proper spacing of the switch 4 from the switch operating mechanism. The sleeves 8 and 9 may also be hollow studs cast integral with the cover 2.

The operating mechanism consists of a bearing sleeve 10 rigidly fixed into the cover 2. This sleeve 10 has the shoulder 11 and right end fitting into the cover 2 and the left end projecting into the case 1 to form, on its outer surface, a bearing for the clevis 12. The inside of the sleeve forms a snug bearing for the shaft 13.

In assembled relation, the shaft 13 projects beyond the front of the cover to receive the actuating lever 14. This lever 14 is rigidly secured to the shaft 13 by the set screw 15. The lever 14 carries the roller 16 which roller is in use disposed to be actuated by some dog on a machine, as for instance a dog mounted on a planer platen.

The clevis 12 has the bearing opening 17 and the opening 18. The opening 17 provides a snug but free bearing for the clevis 12 whereas the opening 18 receives the sleeve 8 and is sufficiently large, as will be clear from Fig. 2, to allow for a selected angular motion of the clevis 12.

The clevis 12 has the sleeves 19 and 20 mounted between the facing ends of the clevis. The sleeves 19 and 20 are held in place by the rivets 21 and 22, respectively.

In assembled relation the spring 23 is disposed over the left end of sleeve 10 within the clevis with the end 24 behind the sleeve 19 and the end 25 in front of the sleeve 19.

The sleeve 20 is provided with the groove 26 for receiving the upper knife-edged arcuate end

of the spring **27**. The cover **2** is provided with the grooved stud **28** for receiving the lower knife-edged arcuate end of the spring **27**. The cover **2** also has the projection **29** to prevent the spring **27** from being bowed out toward the front. In use the spring is under stress so that it will always be bowed out toward the left, as seen in Fig. 1, to be just touching the plunger **5** when the plunger **5** has not been actuated toward the left.

The left end of shaft **13** carries the actuator **30**. This actuator **30** is rigidly fixed to shaft **13** and thus imparts the same angular movement to the finger **31** on the actuator **30** that is imparted to the actuator by the lever **14** as it is operated.

In operation, if the actuating dog motion is from right to left in Fig. 2, then the finger **31** moves counterclockwise against the spring arm **25**. Since the spring is chosen rather stiff and is under stress, the other spring arm **24** actuates the clevis **12** counterclockwise about the bearing sleeve **10** until the sleeve **8** engages the top of the opening **18**. Further, counterclockwise motion of the clevis **12** is thus arrested, but counterclockwise motion that did take place was sufficient to bow the spring **27** sufficiently to operate the switch **4**.

The sleeve **8** does not, however, arrest the counterclockwise motion of lever **14** because the finger **31** merely moves the spring end **25** counterclockwise whereas the spring end **24** does not follow.

In practice, the actuating dog usually moves over and beyond the roller to the left and on the return stroke actuates the lever **14** clockwise moving over and beyond the roller to the right.

Upon a release of the lever **14** from a counterclockwise motion, the spring **27** and the spring **23** restore the parts to the position shown in Fig. 2, and upon movement of lever **14** in a clockwise direction, the clevis **12** is not moved at all because spring end **24** only moves clockwise, whereas the spring end **25** remains in the position shown.

In the modification, the base **41** consists of the front or covering **42** and the switch housing **43** for the plunger actuated switch **44** having the operating plunger **45**. The switch **44** is held to the cover **42** by the bolts **46** and **47**, with the parts being so selected that the plunger **45** is in proper spaced relation to the plunger actuating spring **67**.

The operating mechanism includes the bearing sleeve **50** rigidly fixed in the cover **42**. The bearing sleeve **50** receives the shaft **53** to which the crank-arm **54** is rigidly secured. The crank-arm **54** carries the roller **56** for coaction with a suitable dog on a machine with which our apparatus is associated.

The inner end of the shaft **53** carries the eccentric disc or cam **57** rigidly secured to the shaft. This cam **57** fits snugly but rotatably into the upper end of the slide actuating link **58**. The lower end of the link **58** is provided with a bearing opening for receiving the stud **59** rigidly mounted on the slide **60**.

The slide **60** is disposed for rectilinear vertical motion in suitable guides in the cover **42**. The upper end of the slide **60** is provided with a rearwardly projecting lug **61** forming an upper end bearing for the spring **67**. The cover **42** is provided with a bearing notch for receiving the lower end of the spring **67**. The rear face of the slide **61** is provided with the button **66** for providing the spring **67** with a bowed deflection. The spring **67** is disposed in its end bearings in a slightly stressed position so that it does not fall out and will always be in position to be bowed out toward the left, as shown in Fig. 5, when the slide **61** is moved vertically downward.

In operation, when the dog on the machine actuates the roller **56** and thus the arm **54** in a rotary motion, the eccentric cam **57** moves the link **58** downwardly and thus forces the slide **61** down. This operation bows the spring **67** in the direction shown in Fig. 5 and the switch actuating plunger **45** is thus depressed and the switch **44** is operated.

In Fig. 7, we show certain parts of our invention reduced to their simplest structures.

The reference characters **71**, **72**, **73**, **74**, **75**, **76**, and **77** designate the elements that correspond to elements **41**, **42**, **43**, **44**, **45**, **46** and **47** of Figs. 4 and 5.

The spring **97** is disposed in a bowed condition between the notch in the cover **72** and a similar notch in the spring deflecting plunger **91**. The stud **96** prevents the spring **97** from taking a bowed position such that depression of the plunger **91** would cause the spring **97** to bow outwardly to the right.

The showing in Fig. 7 is extremely simple and cheap and provides for the actuation of a second plunger longitudinally of its axis by an operation of a first plunger, having its axis disposed at right angles to the second plunger, longitudinally of its axis.

While we have shown and described but one embodiment of our invention, it will be apparent to those skilled in the art that modifications may be made all within the spirit of our invention. We, therefore, do not wish to be limited to the details of the showing made but only by the scope of the claims hereto appended.

We claim as our invention:

1. In a switch actuating mechanism for a plunger actuated switch, in combination, a base, a straight flat spring, a bearing member mounted on said base designed to receive one end of the flat spring, a rotary element mounted for limited rotary motion on said base, a second bearing member, said second bearing member being mounted on the rotary element a short distance from the axis of rotation of the rotary element and being designed to receive the other end of the flat spring, said bearing members, when the rotary element has not been rotated through its limited angular rotation, being so disposed with reference to each other that the spring is slightly bowed and is contiguous to the switch plunger, and means for rotating the rotary element in a direction to decrease the distance between the bearing members to thus bow the spring still more to thus actuate the switch plunger.

2. In a switch actuating device for a switch having a plunger for its actuation, in combination, a base, a rotary element mounted on the base, a bearing stud eccentrically disposed on the rotary element, a bearing stud disposed on the base, a stressed flat spring disposed between the bearing studs, whereby rotation of said rotary element in a given direction decreases the distance between the bearing studs to thus bow the flat spring to actuate the switch plunger.

3. In a switch actuating mechanism for a plunger actuated switch, the combination of, a housing, a shaft rotatably mounted in the housing, a plunger actuated type switch mounted in the housing, the axis of the switch actuating plunger and the shaft being in parallel relation, an actuator consisting of several elements operatively secured to the end of the shaft within the housing and adapted to produce a movement

of an element of the actuator at right angles to the shaft, an elongated flat spring under a bowed deflection disposed between the housing and the element to be bowed still more than the original deflection upon movement of the element to actuate the switch plunger upon rotary motion of the shaft.

4. A switch actuating mechanism including, in combination, a housing, a snap-action type switch mounted in the housing, a switch actuating plunger mounted for operation longitudinally of its axis to actuate the switch, a shaft rotatably mounted in the housing wall, an actuating crank secured to its outer end, and an element operatively secured to the end of the shaft terminating in the housing for producing a crank-arm effect, a flat leaf spring, a bearing on the housing for receiving one end of the spring, a bearing on the element for receiving the other end of the spring, whereby rotary operation of the shaft moves the end bearings of the spring toward each other to thus bow the spring, the spring bearings being so disposed with reference to the switch actuating plunger that rotary operation of the shaft bows the spring to operate the switch actuating plunger longitudinally of its axis.

5. A switch actuating mechanism including, in combination, a housing, a snap-action type switch mounted in the housing, a switch actuating plunger mounted for operation longitudinally of its axis to actuate the switch, a shaft rotatably mounted in the housing wall, an actuating crank secured to its outer end, and an element operatively secured to the end of the shaft terminating in the housing for producing a crank-arm effect, a flat leaf spring, a bearing on the housing for receiving one end of the spring, a bearing on the element for receiving the other end of the spring, whereby rotary operation of the shaft moves the end bearings of the spring toward each other to thus bow the spring, means operatively associated with the element for maintaining the initial bow of the spring in the direction of the switch actuating plunger, the spring bearings being so disposed with reference to the switch actuating plunger that rotary operation of the shaft bows the spring to operate the switch actuating plunger longitudinally of its axis.

6. A switch actuating mechanism including, in combination, a housing, a snap-action type switch mounted in the housing, a plunger mounted for operation longitudinally of its axis to actuate the switch, a shaft rotatably mounted in a wall of the housing having an end projecting into the housing and an end projecting outside of the housing, operating means secured to the end projecting outside of the housing for effecting rotary motion of the shaft, an element secured to the end of the shaft projecting into the housing for producing a crank arm action of a limited extent for a given angular motion of the shaft, a flat leaf spring, a bearing on the housing for receiving the lower end of the spring, a bearing for the other end of the spring on the element, means for producing an initial bow in the spring in a direction of the plunger, said bearings for the spring being so disposed with reference to the plunger that angular rotation of the shaft effects a bowing of the spring to actuate the plunger.

7. A switch actuating mechanism including, in combination, a housing, a snap-action type switch mounted in the housing, a plunger mounted for operation longitudinally of its axis to actuate the switch, a shaft rotatably mounted in a wall of the housing having an end projecting into the housing and an end projecting outside of the housing, operating means secured to the end projecting outside of the housing for effecting rotary motion of the shaft, an eccentric secured to the end of the shaft within the housing, a slide actuated for rectilinear movement normal to the shaft axis upon rotation of the eccentric, a flat leaf spring, a fixed bearing for one end of the leaf spring, a bearing on the slide for the leaf spring, the disposition of the bearings for the spring ends is such that rectilinear movement of the slide bows the spring to actuate the plunger.

8. A switch actuating mechanism including, in combination, a housing, a snap-action type switch mounted in the housing, a plunger mounted for operation longitudinally of its axis to actuate the switch, a shaft rotatably mounted in a wall of the housing having an end projecting into the housing and an end projecting outside of the housing, operating means secured to the end projecting outside of the housing for effecting rotary motion of the shaft, an eccentric secured to the end of the shaft within the housing, a slide disposed in suitable guides in the housing normal to the shaft for rectilinear movement in a plane normal to the shaft axis, a coupling link between the eccentric and the slide for effecting rectilinear movement of the slide upon rotation of the shaft, a flat leaf spring, a bearing member on the slide for receiving one end of the spring, a fixed bearing for receiving the other end of the spring, the bearings being so disposed that rotary motion of the shaft bows the spring to actuate the plunger.

9. A switch actuating mechanism including, in combination, a housing, a snap-action type switch mounted in the housing, a plunger mounted for operation longitudinally of its axis to actuate the switch, a shaft rotatably mounted in a wall of the housing having an end projecting into the housing and an end projecting outside of the housing, operating means secured to the end projecting outside of the housing for effecting rotary motion of the shaft, an eccentric secured to the end of the shaft within the housing, a slide disposed in suitable guides in the housing normal to the shaft for rectilinear movement in a plane normal to the shaft axis, a coupling link between the eccentric and the slide for effecting rectilinear movement of the slide upon rotation of the shaft, a flat leaf spring, a bearing member on the slide for receiving one end of the spring, a fixed bearing for receiving the other end of the spring, said spring being disposed under stress between the bearings so as to place an initial bow in the spring, means for making the initial bow be in a given direction, the bearings being so disposed that rotary motion of the shaft bows the spring to actuate the plunger.

10. A switch actuating mechanism including, in combination, a housing, a snap-action type switch mounted in the housing, a plunger mounted for operation longitudinally of its axis to actuate the switch, a shaft rotatably mounted in a wall of the housing having an end projecting into the housing and an end projecting outside of the housing, operating means secured to the end projecting outside of the housing for effecting rotary motion of the shaft, a rotary element rotatably mounted on the end of the shaft within the housing, a stop for limiting the rotary motion, coupling means including a spring, and a crank arm

secured to the inner end of the shaft for effecting a limited crank-arm movement of the rotary element upon rotation of the shaft in a given direction, a flat leaf spring, a bearing member on the rotary element for receiving one end of the spring, a fixed bearing for receiving the other end of the spring, said flat leaf spring being bowed between said bearings, the bearings being so disposed that rotary motion of the shaft bows the flat leaf spring still more to actuate the plunger.

11. A switch actuating mechanism including, in combination, a housing, a snap-action type switch mounted in the housing, a plunger mounted for operation longitudinally of its axis to actuate the switch, a shaft rotatably mounted in a wall of the housing having an end projecting into the housing and an end projecting outside of the housing, operating means secured to the end projecting outside of the housing for effecting rotary motion of the shaft, a rotary element rotatably mounted on the end of the shaft within the housing, a stop for limiting the rotary motion, coupling means including a spring, and a crank arm secured to the inner end of the shaft for effecting a limited crank-arm movement of the rotary element upon rotation of the shaft in a given direction, a flat leaf spring, a bearing member on the rotary element for receiving one end of the spring, a fixed bearing for receiving the other end of the spring, said flat spring being disposed under stress between the bearings so as to place an initial bow in the flat spring, means for making the initial bow be in a given direction, the bearings being so disposed that rotary motion of the shaft bows the flat spring still more to actuate the plunger.

12. In a switch actuating device for a switch having a plunger for its actuation, in combination, a base, a rotary element mounted on the base, a flat spring, a bearing disposed to be actuated by the rotary element, a bearing disposed on the base, said flat spring being disposed between

the bearings in a stressed condition, whereby rotation of said rotary element in a given direction decreases the distance between the bearings to thus bow the flat spring to actuate the switch plunger.

13. A switch actuating mechanism including, in combination, a housing, a snap-action type switch mounted in the housing, a plunger mounted for operation longitudinally of its axis to actuate the switch, a straight flat spring, a bearing member mounted on said housing designed to receive one end of the flat spring, a shaft rotatably mounted in a wall of the housing having an end projecting outside of the housing, operating means secured to the end projecting outside of the housing for effecting rotary motion of the shaft, an actuator consisting of several elements operatively secured to the end of the shaft within the housing, a second bearing member designed to receive the other end of the flat spring, said second bearing member being operatively associated with the actuator, means for producing an initial bow in the spring in a direction of the plunger, said bearings for the spring being so disposed with reference to the plunger that the angular rotation of the shaft effects a further bowing of the spring to actuate the plunger.

RALPH B. IMMEL.
LAWRENCE PIERCE.
STANLEY KMONK, JR.

References Cited in the file of this patent

UNITED STATES PATENTS

Number	Name	Date
1,493,559	Norden	May 13, 1924
1,676,155	Pfeifer	July 3, 1928
1,680,428	Mottlau	Aug. 14, 1928
1,973,800	Curtis	Sept. 18, 1934
2,040,663	Mallet	May 12, 1936
2,121,626	Degelman	June 21, 1938
2,218,837	Wahl	Oct. 22, 1940