(No Model.)

J. S. PARMENTER.

DEVICE FOR CONVERTING MOTION.

No. 271,909. Patented Feb. 6, 1883.

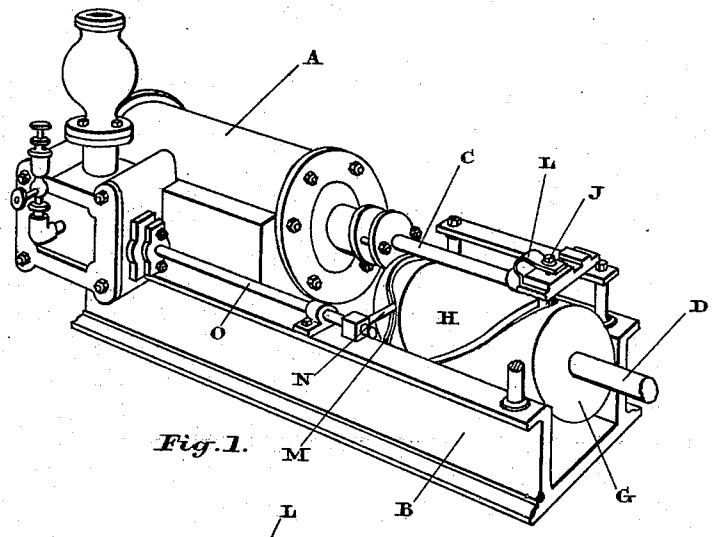

Fig. 1.

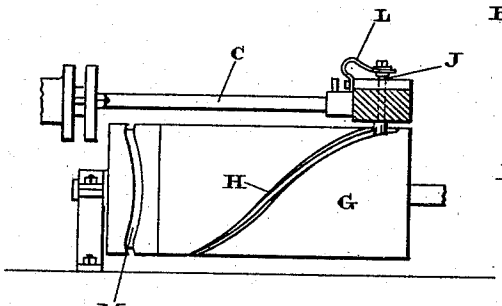

Fig. 2.

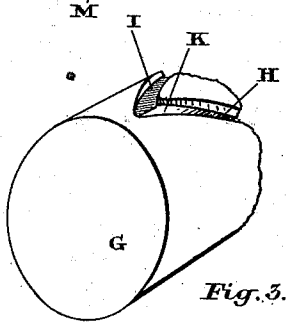

Fig. 3.

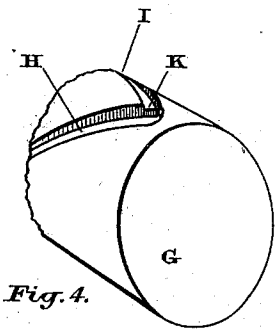

Fig. 4.

Witnesses.

Lewis Toulmin

Chas. B. Baldwin

Inventor.

James S. Parmenter

by Donald C. Ridout & Co.

Attorneys

N. PETERS. Photo-Lithographer, Washington, D. C.

UNITED STATES PATENT OFFICE.

JAMES S. PARMENTER, OF WOODSTOCK, ONTARIO, CANADA.

DEVICE FOR CONVERTING MOTION.

SPECIFICATION forming part of Letters Patent No. 271,809, dated February 6, 1883.

Application filed September 29, 1882. (No model.)

To all whom it may concern:

Be it known that I, JAMES SPENCER PARMENTER, of the town of Woodstock, in the county of Oxford, in the Province of Ontario, Canada, glue-manufacturer, have invented certain new and useful Improvements in Steam-Engines, of which the following is a specification.

My invention relates to that class of steam-engines in which the reciprocating movement of a piston causes the main shaft of the engine to revolve parallel with the motion of the piston-rod, and the object of the invention is to devise a mechanical movement which will translate the reciprocating movement of the piston into the rotary movement required for the main shaft of the engine with the least possible loss of power; and it consists in the peculiar construction and arrangement of parts more particularly hereinafter described and claimed.

Figure 1 is a perspective view of my engine. Fig. 2 is an elevation of the cylindrical block and guides. Figs. 3 and 4 are views showing the position of the guide ends.

In the drawings, A is the cylinder, resting upon the bed-plate B and provided with an ordinary reciprocating piston-rod, C.

D is the main driving-shaft, supported in suitable bearings and running parallel with the piston-rod.

G is a cylindrical block fixed to or forming part of the engine-shaft D.

H is a spiral groove or guide extending from one end of the cylindrical block to the other, and extending in this instance from one side of the block to the other side. I is a similar spiral groove or guide, curved in an inverse direction to that of the guide H. Both ends of both guides meet at their respective ends.

J is a projection or pin working through the cross-head attached to the piston-rod C. This pin or projection is designed to fit into the grooves or guides H I. As it is necessary, in order to translate the reciprocating movement of the piston into the required rotary movement for the shaft, the pin J should follow one groove on the upstroke and the other on the return, certain provision is necessary in order to prevent the pin returning by the same guide it followed in the upstroke. To accomplish this purpose I place at one end of each groove or guide a block, K, beveled on the side extending into the guide or groove, within which it is set, and having its end cut off abruptly at the point where it enters the other guide. Reference to Figs. 3 and 4 will explain my meaning, in which figures it will be noticed that the end of block K forms one side of the guide. In order to permit the pin J to mount over the block K, it is made to slide vertically within the cross-head holding it to the piston-rod, a spring, L, or other suitable mechanical device being provided to keep the pin down and cause it to drop over the end of the block K when the end of the guide is reached.

In connection with my spirally-grooved cylinder for changing a reciprocating movement into a rotary one, I provide a simple device for operating the engine-valve. This is clearly shown in the drawings, in which M is a cam-groove cut around the periphery of the spirally-grooved cylinder and made such a form as will impart to the valve-spindle the required reciprocating movement. A pin or projection, N, formed on the end of the valve-spindle O fits into the cam-groove M. As the cylinder revolves the projection N, in following the groove M, induces the required reciprocating movement to the valve-spindle, the form of the cam-groove, as before stated, being made such a shape as will impart the required movement to the valve.

I am aware of the Patent No. 127,747, and make no claim to the construction therein shown.

What I claim as my invention is—

1. In a steam-engine having a reciprocating piston-rod, a pin sliding in a guide attached to or forming part of said rod, the said rod in combination with two spiral guides formed on the periphery of a cylindrical block fixed to or forming part of the main engine-shaft, the said guides being inversely formed upon the cylinder, the ends of the one meeting the ends of the other, so that the pin moving with the piston-rod and following the channel of one guide shall, upon reaching the end of the stroke and commencing to travel on the return-stroke, be directed to the depressed part of the other guide, thereby imparting to the grooved cylinder a rotary movement in the same direction derived by it from the contrary movement of the piston-rod, and thereby the reciprocating

movement of the piston-rod imparts the required rotary motion to the main shaft, substantially as described.

2. The combination, with a cylinder, reciprocating piston, and its rod and cross-head, of a shaft, D, arranged parallel with the piston-rod, a cylinder, G, secured upon said shaft, having two spiral grooves, H, set inversely to each other, the end of one groove being deeper than the contiguous end of the opposite groove, and a spring-pin, J, attached to said cross-head and adapted to rise up the incline at the end of one groove and drop into the recess at the beginning of the other, substantially as and for the purpose specified.

JAS. S. PARMENTER.

Witnesses:
CHAS. C. BALDWIN,
LEWIS TOMLINSON.