W. HARDWICK.
BALANCED-VALVES.

No. 194,147. Patented Aug. 14, 1877.

Fig. 1.

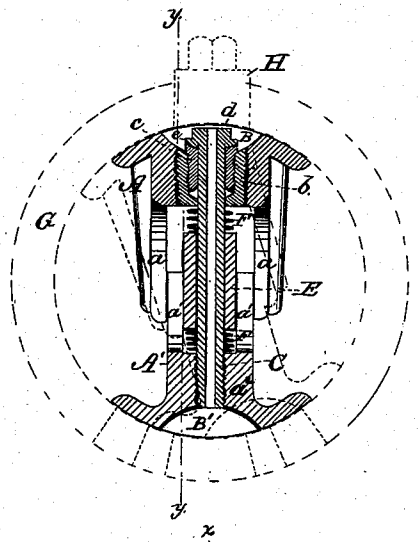

Fig. 2.

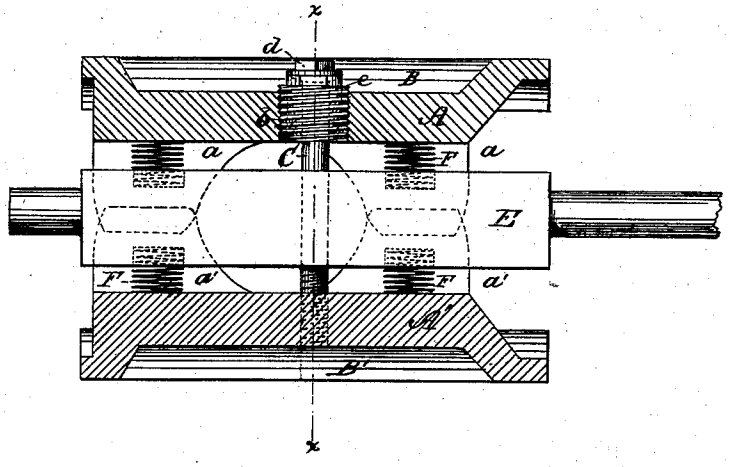

Fig. 3.

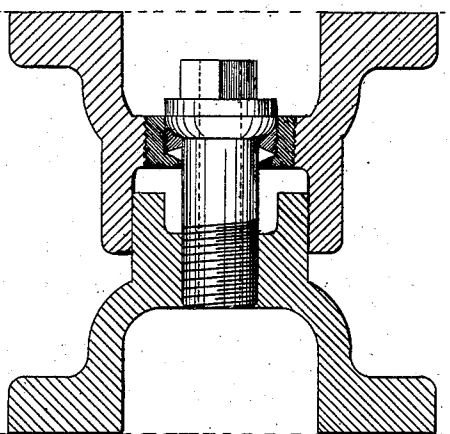

WITNESSES:

W. W. Hollingsworth

Edw. W. Byrn

INVENTOR:

Wm. Hardwick

BY

ATTORNEYS.

N. PETERS, PHOTO-LITHOGRAPHER, WASHINGTON, D. C.

UNITED STATES PATENT OFFICE.

WILLIAM HARDWICK, OF ERIE, PENNSYLVANIA.

IMPROVEMENT IN BALANCED VALVES.

Specification forming part of Letters Patent No. **194,147**, dated August 14, 1877; application filed June 20, 1877.

To all whom it may concern:

Be it known that I, WILLIAM HARDWICK, of the city and county of Erie, and State of Pennsylvania, have invented a new and Improved Balanced Valve; and I do hereby declare that the following is a full, clear, and exact description of the same, reference being had to the accompanying drawings, forming part of this specification.

Figure 1 is a transverse section of an oscillating valve through the line *x x* of Fig. 2, with the steam-chest in dotted lines. Fig. 2 is a longitudinal section of the same through the line *y y* of Fig. 1. Fig. 3 is a sectional view of a slide-valve, showing the application of part of my improvements to the same.

My invention relates to certain improvements in valves of that class in which the two parts of the valve are made adjustable toward or from each other. Said improvements consist in the particular arrangement of a perforated bolt, connecting opposite chambers in the valve and passing directly through the valve-rod; in the arrangement of a stuffing-box for connecting the bolt and the valve; and in the particular arrangement of springs in connection with the bolt and the two parts of the valve, for the purpose of holding the latter in proper position, as hereinafter more fully described.

In the drawing, A A′ are the two parts of the valve, which parts are formed with the inwardly-projecting parallel lugs *a a*¹, forming yokes, which pass the one into the other, to guide the parts in their adjustment. The said parts A A′ of the valve are each formed with symmetrical chambers B B′, and are adjusted toward each other by means of a bolt, C. This bolt is perforated longitudinally from end to end, so as to open communication between the chambers B B′. It is attached to the part A′ of the valve by means of a screw-thread, *a*², upon its lower extremity, and is loosely connected with a corresponding part of the upper portion of the valve by means of a stuffing-box and collar. The stuffing-box is formed by means of a bushing, *b*, connected with the valve by a screw-thread, and an annular adjustable cap, *c*, which screws into the interiorly-threaded bushing, and compresses the packing around the shank of the bolt. This packing, it will be seen, serves to prevent the passage of live steam from the space between the parts of the valve to the chamber B.

In order to adjust the parts of the valve toward each other, the bolt is made with a squared wrench-head, *d*, and a collar, *e*, which latter is made convex upon its under side, and binds against the correspondingly-concaved upper face of the cap *c* of the stuffing-box, the connection here between the collar and the cap being made with a ground joint to still further obviate the passage of steam.

E is the valve-rod, which is made rectangular between the parts of the valve, and rounded beyond the same. The rectangular part of this rod passes between the lugs of the parts of the valve, and through said rectangular portion passes the perforated bolt C. F are spiral springs, which are four or more in number, and arranged in seats in rod E, two of them between rod E and the part A of the valve, and the other two between the rod E and the part A′ of the valve. These springs operate in an opposite direction to the adjustment of the perforated bolt, and serve to throw the two parts of the valve away from each other, and thus hold them apart in their proper positions when the steam is not on.

The valve as thus described is arranged within a steam-chest, G, (shown in dotted lines,) which latter is provided with an opening closed by a screw-plug, H, which plug may be removed to give access to the squared end of the perforated bolt C, in order to permit the turning of the latter in effecting the adjustment of the parts of the valve toward each other. The said steam-chest may also be chambered out to give sufficient room for the bolt-head.

In relation to the merit of the perforation in the bolt C, it will be seen that in the steam-space about the valve in the steam-chest the areas of pressure upon the upper and lower parts of the valve are about the same, and neutralize each other. When, however, the chamber B′ of the valve connects an induction-port with the exhaust-port, as shown in dotted lines in Fig. 1, there is a pressure of exhaust-steam against the valve, which tends

to throw the valve out of balance, and causes it to bind against the opposite side of the steam-chest.

By perforating the bolt C throughout its entire length, and connecting the chambers B and B′, it will be seen that this pressure of the exhaust-steam is allowed to operate upon both sides of the valve, and, its effect upon the valve being neutralized, the latter is kept in perfect balance.

I am aware of the fact that a perforated bolt is not broadly new in connection with a balanced valve, and I do not claim the same, except when combined with the valve and valve-rod, as shown, and passing directly through said rod, which arrangement serves to connect and secure the valve-rod to the valve, so that the two parts of the same receive more positive motion from the rod without affecting the adjustability of the parts or interfering with the communication between the equalizing-chambers.

Having thus described my invention, what I claim as new is—

1. The combination, with the valve A A′ and the valve-rod E, of the perforated bolt C, connecting the opposite chambers in the valve, and passing directly through the valve-rod, substantially as described.

2. An exteriorly-threaded bushing located in the movable portion of a balanced valve, and combined with the said movable portion and a connecting-bolt, for the purpose described.

3. The stuffing-box consisting of the interiorly and exteriorly threaded bushing *b* and the threaded cap *c*, in combination with the bolt C and the valve, substantially as and for the purpose described.

4. The springs F, combined with the valve-pieces A A′, having guide-lugs *a* a^1, and a bolt, connecting the parts of the valve by means of a screw-thread at one end and a collar at the other, substantially as and for the purpose described.

WILLIAM HARDWICK.

Witnesses:
CHARLES F. HIRT,
THOS. J. PARADINE.