May 23, 1950 R. R. HOBSON 2,509,000

FREEZING TRAY

Filed May 28, 1947 3 Sheets-Sheet 1

Fig. 1.

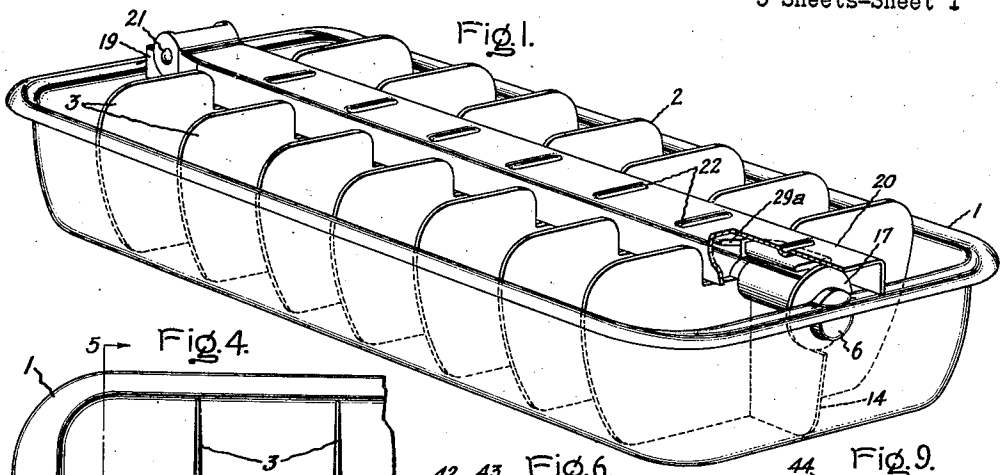

Fig. 4.

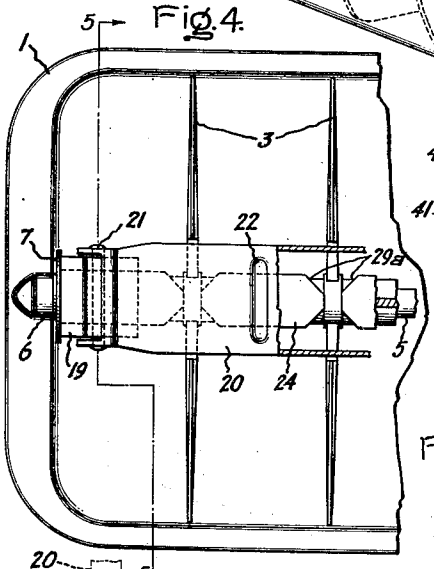

Fig. 6.

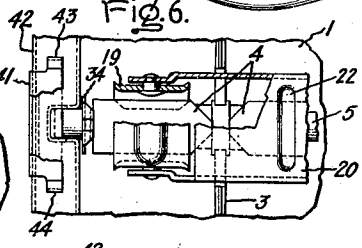

Fig. 9.

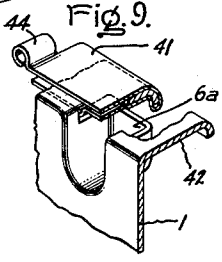

Fig. 7.

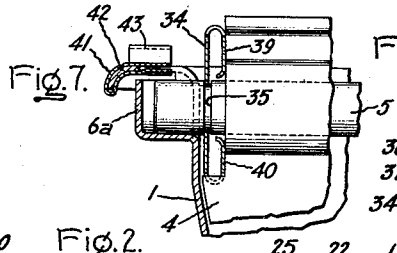

Fig. 8.

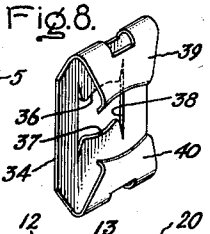

Fig. 2.

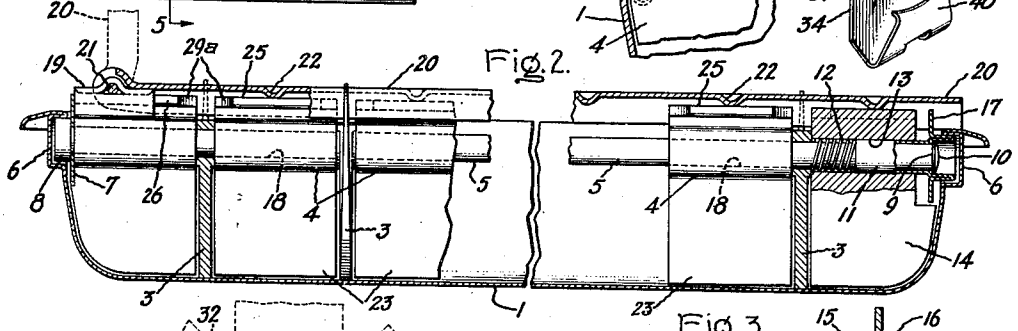

Fig. 5.

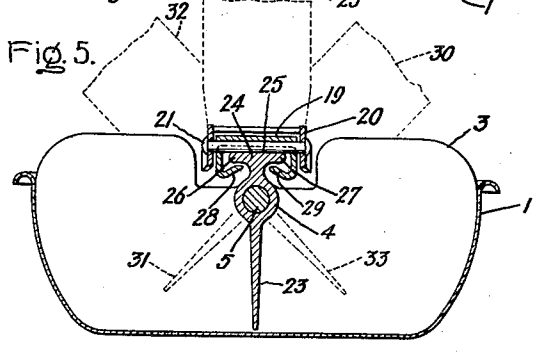

Fig. 3.

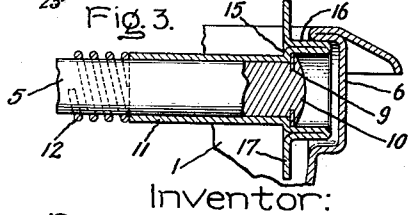

Inventor:
Robert R. Hobson,

by Edwin L. Rick
His Attorney.

May 23, 1950 R. R. HOBSON 2,509,000

FREEZING TRAY

Filed May 28, 1947 3 Sheets-Sheet 2

Fig. 10.

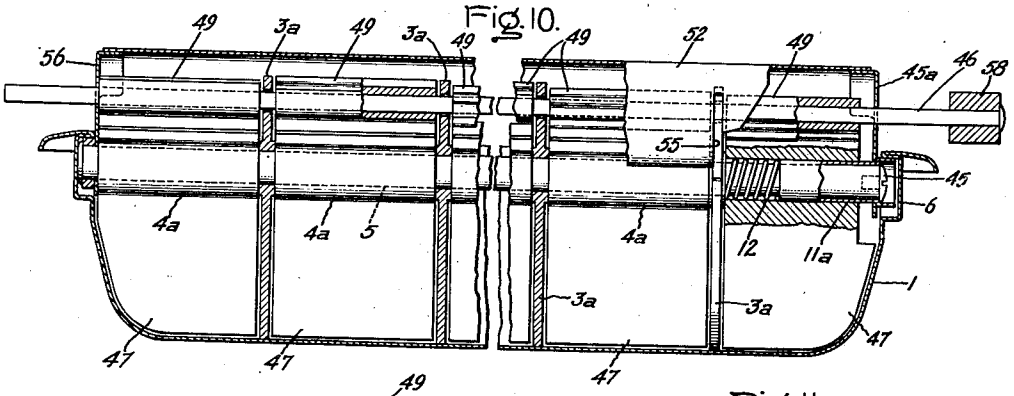

Fig. 12.

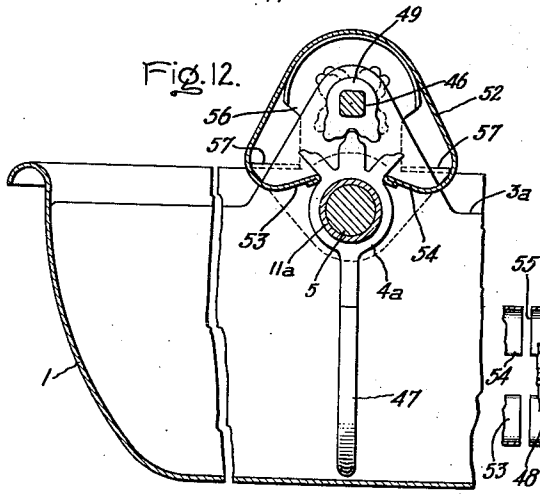

Fig. 11.

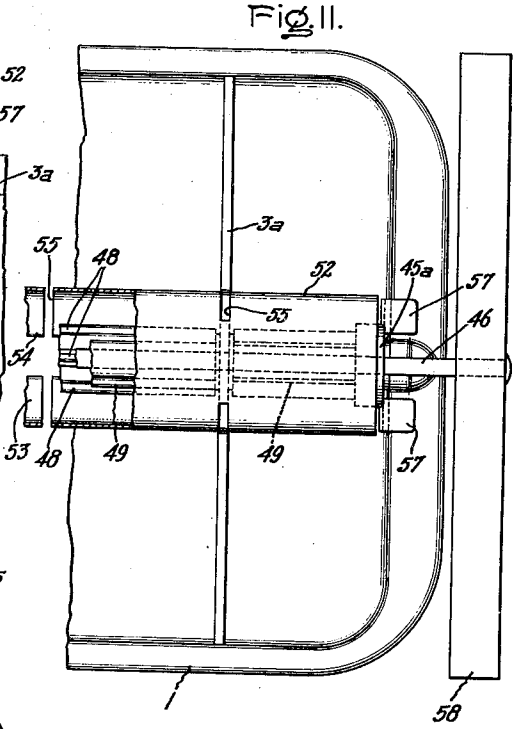

Fig. 13.

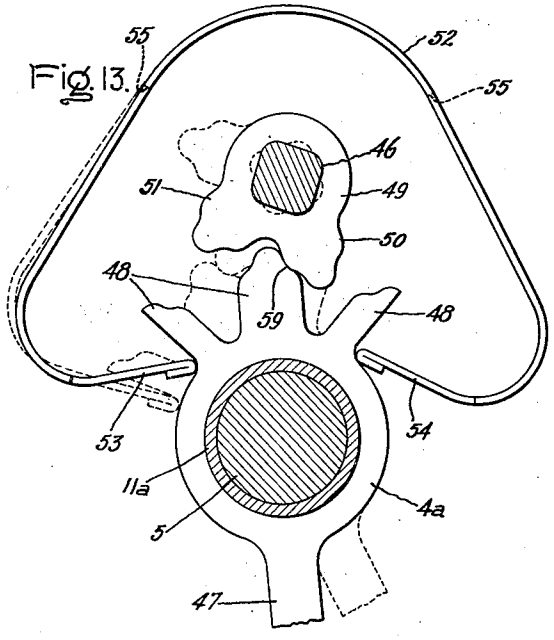

Inventor:
Robert R. Hobson,

by Edwin L. Rich
His Attorney.

May 23, 1950 R. R. HOBSON 2,509,000

FREEZING TRAY

Filed May 28, 1947 3 Sheets-Sheet 3

Fig. 14.

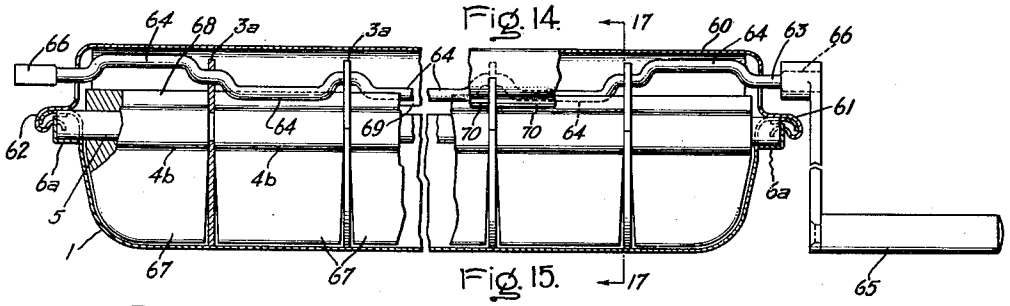

Fig. 15.

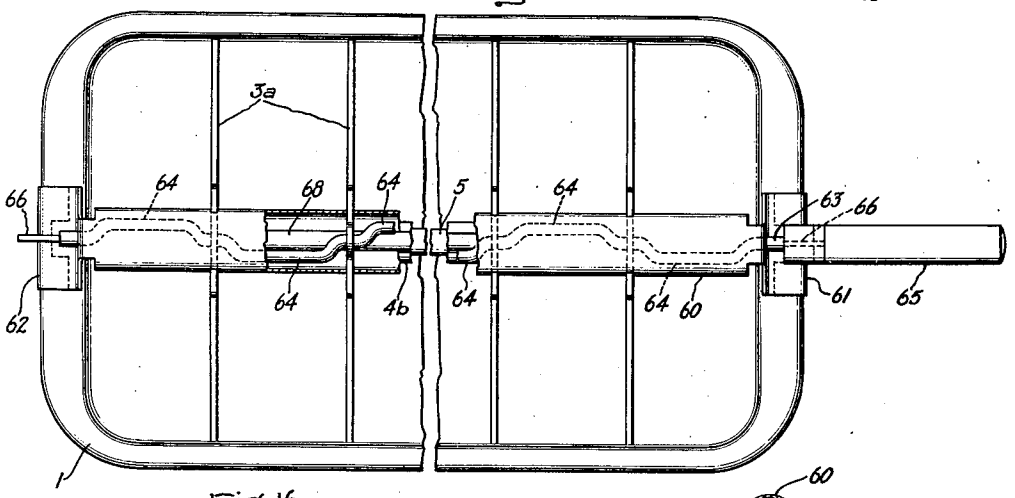

Fig. 16.

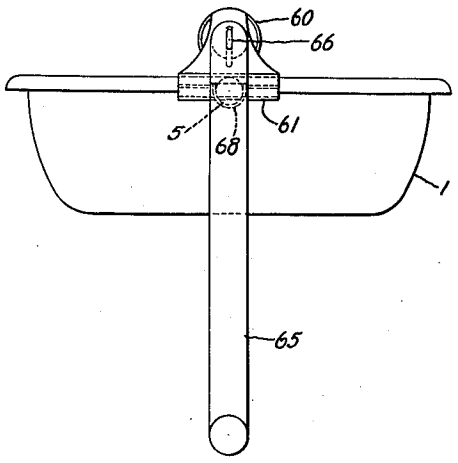

Fig. 17.

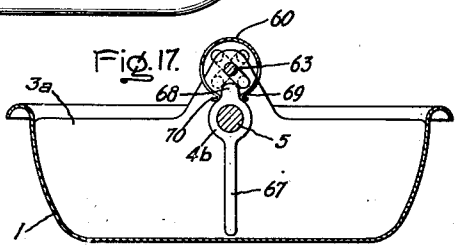

Fig. 18.

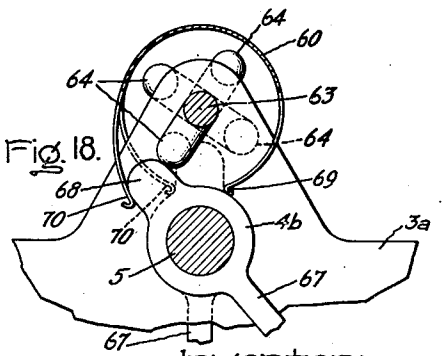

Inventor:
Robert R. Hobson,

by Edwin L. Rich
His Attorney.

Patented May 23, 1950

2,509,000

UNITED STATES PATENT OFFICE

2,509,000

FREEZING TRAY

Robert R. Hobson, Erie, Pa., assignor to General Electric Company, a corporation of New York

Application May 28, 1947, Serial No. 750,992

12 Claims. (Cl. 62—108.5)

1

My invention relates to freezing trays employed in refrigerating machines for the production of ice blocks and more particularly to arrangements for releasing the ice blocks.

Many types of refrigerating apparatus, particularly apparatus for household use, are provided with freezing trays for producing ice. Partitions are commonly provided in such freezing trays in order to divide the tray into a number of small compartments for freezing ice in the form of small blocks or cubes. It is desirable to effect the release of the ice blocks from the partitions and from the tray without the necessity of thawing, which would result in a loss of some of the ice. It is also advantageous for the user to be able to remove small groups of ice blocks without being required to release all of the ice blocks in the tray.

It is an object of my invention to provide a partition assembly for freezing trays comprising a plurality of partition elements forming a plurality of ice block compartments and including an improved arrangement for retaining the partition elements in assembled relation and for accommodating relative movements between the partition elements to facilitate the release of ice blocks therefrom.

It is another object of my invention to provide a freezing tray including an improved arrangement for effecting release of any selected one or more ice blocks at a time.

It is a further object of my invention to provide a freezing tray having a handle for effecting release of the ice blocks and including an improved arrangement for positioning the handle to remove any desired ice block or blocks.

Further objects and advantages of my invention will become apparent as the following description proceeds, and the features of novelty which characterize my invention will be pointed out with particularity in the claims annexed to and forming a part of this specification.

For a better understanding of my invention reference may be had to the accompanying drawings in which Fig. 1 is a perspective view of a freezing tray and a partition assembly embodying my invention; Fig. 2 is a longitudinal elevation view partly in section; Fig. 3 is a sectional view of a portion of the tray and partition assembly shown in Fig. 2; Fig. 4 is a plan view partly broken away of a portion of the tray and partition assembly; Fig. 5 is a sectional view taken along the line 5—5 of Fig. 4; Fig. 6 is a plan view partially broken away of a modified

2

form of my invention showing an alternative arrangement for mounting the partition assembly in the tray; Fig. 7 is a sectional elevation view of the modified form shown in Fig. 6; Fig. 8 is an enlarged view showing a detail of the construction illustrated in Fig. 7; Fig. 9 is a perspective view partially broken away, showing details of the arrangement of Fig. 6 for mounting the partition assembly on the tray; Fig. 10 is a sectional elevation view of a modified form of my invention; Fig. 11 is a plan view partially broken away of a portion of the freezing tray shown in Fig. 10; Fig. 12 is a transverse sectional elevation view of a portion of the tray of Fig. 10; Fig. 13 is an enlarged view showing details of the tray of Fig. 10; Fig. 14 is a sectional elevation view of another modified form of my invention; Fig. 15 is a plan view partially broken away of the freezing tray shown in Fig. 14; Fig. 16 is an end elevation view of the tray of Fig. 14; Fig. 17 is a transverse sectional view, taken along the line 17—17 of Fig. 14; and Fig. 18 is an enlarged view showing details of a portion of the freezing tray of Fig. 14.

Briefly, the freezing tray illustrated in the drawings includes a shallow tray and a partition assembly removably mounted in the tray to provide a plurality of ice block compartments. The tray and partition assembly preferably are composed of a material having a surface which minimizes the tendency of the ice to adhere. For example, when the tray and partition assembly are made of aluminum, it is a common practice to minimize such adherence by anodizing the aluminum and coating it with a high melting point wax. The partition assembly is composed of a plurality of transverse partition elements and a plurality of longitudinal partition elements all assembled on a shaft extending longitudinally of the tray near the top thereof. The longitudinal partition elements are arranged for swinging movement about the shaft, and either a direct acting handle or a handle and various camming devices may be provided to swing the longitudinal partition elements in order to effect mechanical release of one or more ice blocks.

Referring to Fig. 1 of the drawings, I have shown a rectangular freezing tray 1 and a removable partition assembly 2. The partition assembly includes a plurality of transverse separators or partition elements 3 and a plurality of longitudinal separators or partition elements 4. Both the transverse and the longitudinal separators are assembled on a shaft 5 which extends longitudinally of the tray and is mounted in re-

cesses 6 formed in each end of the tray near the rim thereof.

Referring in further detail to Fig. 2, it can be seen that the transverse separators 3 and the longitudinal separators 4 are mounted alternately along the length of the shaft. In order to retain the separators on the shaft a washer 7 is mounted on the shaft to bear against the extreme left longitudinal separator, and a collar 8 is secured to the end of the shaft to form a stop for the washer; at the opposite end the shaft is provided with a second washer 9 which is arranged to fit in a groove in the shaft, and the shaft is then peened over, as shown at 10.

The partition assembly is arranged within the tray so that it may be readily removed therefrom when desired. This is accomplished by providing a sleeve 11, slidably mounted on the right end of the shaft as shown in detail in Fig. 3. This sleeve is biased toward the end of the shaft by a coil spring 12 which bears at one end against the adjacent transverse separator and at the other end against the sleeve 11. The coil spring surrounds the shaft 5 and fits within a bore 13 extending through the extreme right longitudinal separator, indicated at 14. The sleeve 11 is provided with a radially extending portion 15 which is arranged to bear against the washer 9 to limit the movement of the sleeve under the bias of the spring 12. The sleeve further includes a longitudinally extending reverse bent portion 16 which, in the assembled position of the partition assembly, is arranged to fit within the recess 6. In order that the sleeve may be moved to effect release of the partition assembly from the tray the sleeve includes a radially extending flange 17 which projects above the top of the tray in a position readily accessible to the user. To remove the partition assembly from the tray the user presses against the flange 17 moving the sleeve 11 to the left against the bias of the spring 12. This shifts the portion 16 of the sleeve 11 beyond the recess 6 and allows the removal of the entire partition assembly from the tray.

In order to provide for the assembling of the separators on the shaft each separator is provided with a suitable bore 18, which is of substantially the same diameter as the shaft. The extreme right longitudinal separator 14 is provided with a bore 13 of slightly larger diameter than the bore 18 of the remaining separators to accommodate the sleeve 11 and the spring 12 between the shaft and the separator.

The mechanical release of the ice blocks from the tray and partition assembly is effected by swinging the longitudinal separators, and a handle assembly is provided for swinging these separators. This handle assembly includes a slidable element 19, arranged to selectively engage the longitudinal separators, and a handle 20. The handle swings about a pin 21 from a position extending longitudinally of the tray, as shown by the solid lines in Fig. 2, to an elevated position extending upwardly from the tray, as shown by the dotted lines in Fig. 2. In the position extending longitudinally in the tray, which position the handle occupies during the freezing of the ice blocks, the handle rests on the top surface of the longitudinal separators. In order to prevent condensed moisture or spilled water from freezing solidly between the handle and the longitudinal separators and rendering difficult the shifting of the handle to the elevated position, the handle is provided with a plurality of indentations 22, each of the indentations being arranged to support the handle on a longitudinal separator and to leave a space between the remainder of the handle and the separator. In this way the area of contact between the handle and the longitudinal separators is minimized, and the effort required to break the handle loose for shifting to the elevated position is correspondingly minimized. Although the handle has been illustrated as part of the assembled tray, it will be apparent that the handle can be arranged for use separate from the assembly so that one handle may be employed with several trays.

Referring to Figs. 4 and 5, it can be seen that the longitudinal separators are provided with a partition or wall portion 23 extending downwardly from the shaft 5 on which the separators are mounted. This portion 23 may be tapered, as shown in Fig. 5, if desired. The upper portion of the longitudinal separators is suitably shaped to provide for engagement with the handle. Thus, above the shaft 5 the longitudinal separators are provided with a portion 24 extending laterally from the vertical axis of the separator. This portion 24 includes a top surface 25 on which the indentations 22 of the handle rest and two lips 26 and 27 which are arranged for engagement by the slidable element 19. Since the longitudinal separators are all of similar T-shaped construction and are arranged on the straight shaft 5, the portions 24 are in substantial alignment along the length of the tray. The portions 24 thereby serve as guides along which the slidable element 19 may be moved for positioning in engagement with any selected one of the longitudinal separators. The slidable element 19 is provided with two inwardly extending portions or lips 28 and 29 which are arranged below the lips 26 and 27 of the longitudinal separators for maintaining the slidable element in engagement with the longitudinal separators.

In addition to its use in effecting release of the ice blocks from the tray the handle assembly also serves to align the longitudinal separators when the tray is filled with water for freezing. By moving the slidable element 19 of the handle assembly along the length of the tray in engagement with the portions 24 of the longitudinal separators, the various longitudinal separators can be brought into substantially vertical position and into angular alignment with each other. In order to facilitate the movement of the slidable element 19 along the longitudinal separators, these separators may be chamfered at each end as shown at 29*a*. The chamfered construction is particularly useful during the initial alignment of the separators preparatory to freezing, since the longitudinal separators may at that time be somewhat askew.

The operation of the freezing tray to effect release of ice blocks is illustrated in Fig. 5. When ice blocks are desired, the handle 20 is lifted from its solid line position shown in Fig. 2, and the slidable element 19 is moved along the aligned guide portions 24 of the longitudinal separators to a position in engagement with the separator adjacent the ice block or blocks which it is desired to release. The handle is then shifted to the dotted line position shown in Fig. 2, which corresponds to the central position of the handle shown in Fig. 5, wherein the handle is substantially perpendicular to the surface of the ice. The handle is then moved in a plane transverse of the tray either to the left or to the right, for example, to the position shown by the dotted lines 30. This causes a swinging of the

selected longitudinal separator about the shaft to the position shown by the dotted lines 31. Since the transverse separators are maintained substantially stationary, this swinging of the longitudinal separator results in a relative movement between the longitudinal separator and the transverse separators adjacent thereto and a consequent shearing of the ice blocks from the transverse separators. Since the longitudinal separator, of course, also moves relative to the tray the left-hand ice block is released from the tray during this swinging movement of the handle and the longitudinal separator. Moreover, since the portion 23 of the longitudinal separator normally flexes slightly during this swinging movement the ice block is also broken free from the longitudinal separator. As the handle is swung in a clockwise direction the ice block is moved upwardly from its compartment for removal from the tray. To release the ice block which is positioned adjacent the opposite side of the longitudinal separator the handle is then swung in a counterclockwise direction to the position shown by the dotted lines 32, the separator being correspondingly moved to the position shown by the dotted lines 33. It will be noted that prior to the swinging of the handle from the position 30 to the position 32 the ice block positioned to the right of the longitudinal separator has already been freed from the longitudinal separator, since this separator has been broken loose from the relatively stationary right-hand ice block during the movement of the separator to the position 31. The movement of the handle to the position 32 results in a shearing of the ice block from the adjacent transverse separators and from the tray in the same manner as previously described in connection with the left-hand ice block. Further, in any case where there may have been insufficient flexing of the longitudinal separator in moving to the position 31 to loosen the left-hand ice block from the separator, this ice block will be forcibly broken loose as the separator is moved to the position 33.

Although not necessary for the satisfactory operation of the tray, the transverse separators may be tapered from the center toward the sides of the tray, as shown in Fig. 4, and they may also be tapered from the bottom toward the top edges, as shown in Fig. 2, in order to further facilitate the release of the ice blocks and the shifting of the ice blocks transversely of the tray. It will be seen that this provides a greater distance between adjacent transverse separators at the outer edges of the tray and at the top than at the central portion thereof; in other words, the separators are tapered to provide a progressively larger opening in the direction in which the ice blocks are moved, which minimizes any binding of the blocks and facilitates their release and removal. In order to prevent the binding of the ice blocks against the sides of the tray, the sides are inclined outwardly, as shown in Fig. 5, so that the distance from the shaft 5 to the sides of the tray progressively increases from the bottom to the top of the tray. Although all the compartments have been illustrated of the same size, it will be apparent that compartments of different sizes can be provided by merely varying the length of the longitudinal separators between adjacent transverse separators. Since my arrangement permits any ice block to be selected for removal, the provision of compartments of different sizes would enable

an ice block of any desired size to be removed from the tray. It will also be apparent that, although all of the longitudinal separators have been illustrated as separate elements, one or more adjacent longitudinal separators may be connected, if desired, so as to operate simultaneously to remove a plurality of adjacent ice blocks with a single operation of the handle.

The details illustrated in Figs. 6 through 9 are modifications of the structure shown in Figs. 1 to 5 inclusive, and corresponding parts have been designated by the same numerals. The modifications illustrated in Figs. 6 to 9 inclusive relate to alternative arrangements for retaining the separators on the shaft and for detachably retaining the partition assembly in the tray. In order to hold the separators in assembled relation on the shaft 5, a spring clip 34 is arranged to slide over the end of the shaft and to snap into a groove 35 provided in the shaft 5. The clip 34 includes flexible lips 36 and 37 surrounding an opening 38 in the clip, and these lips flex sufficiently to permit the clip to be forced over the end of the shaft and into engagement with the groove 35. The clip further includes resilient inwardly bent portions 39 and 40 which are arranged to bear against an adjacent longitudinal separator 4. Although this assembling arrangement has been illustrated at only one end of the shaft, a corresponding arrangement is provided at the other end, and the resilient force exerted by the two clips forces the longitudinal and transverse separators mounted on the shaft into a unitary assembly. Further, since the transverse separators and the longitudinal separators are provided with a substantial area of flat surface surrounding and substantially perpendicular to the axis of the bores through these separators, the pressure of the clips 34 in forcing the separators against one another assists in maintaining the transverse separators substantially perpendicular to the longitudinal axis of the tray.

The partition assembly is detachably mounted on the tray by the provision of recesses in the rim of the tray for receiving the ends of the shaft and the provision of slidable retainers associated with the recesses. An indentation or recess 6a is formed in each end of the tray, the recess being open at the top for the reception of the shaft 5. Slidable retainers 41 are provided at each end of the tray in engagement with the rim of the tray, indicated at 42. These retainers are slidable along the rim transversely of the tray to close or expose the top opening in each of the recesses 6a. Each retainer is provided with suitable ears 43 and 44 at opposite ends thereof. To remove the partition assembly from the tray the retainers are moved by pressure exerted against one or the other of the ears toward a side of the tray to expose the top opening of the recesses 6a. When the assembly is again placed in the tray the retainers are slid transversely to cover the openings in the recesses 6a and maintain the assembly in position within the tray. Although I have shown and described a tray in which recesses 6a at both ends of the tray are open at the top for reception of the shaft, it will be apparent that only one of these recesses need be open at the top and, in such case, only one retainer 41 is required.

An alternative form of freezing tray is shown in Figs. 10 through 13. Parts corresponding to those used in the trays illustrated in the previous figures have been designated by the same num-

erals. In this alternative form the swinging of the longitudinal separators for the release of ice blocks is accomplished through the use of cams positioned for engagement with the longitudinal separators. These cams are keyed on a second shaft which is arranged substantially parallel to the shaft which supports the separators, so that rotation of the second shaft by a suitable handle effects release of ice blocks.

Referring now to Fig. 10, a plurality of transverse separators or partition elements 3*a* and a plurality of longitudinal separators or partition elements 4*a* are alternately arranged on a shaft 5 to form a partition assembly. A sleeve 11*a* is provided on one end of the shaft 5, and a coil spring 12 is arranged to bias the sleeve 11*a* into engagement with a recess 6 of the tray, the extent of the movement of the sleeve under this spring bias being limited by the head of a screw 45 which is threaded into the end of the shaft 5. To effect removal of the partition assembly from the tray an upwardly extending operating arm 45*a*, which is arranged on the sleeve 11*a* and is brazed or otherwise suitably bonded thereto, is moved to the left to shift the sleeve in a manner similar to that previously described in connection with Figs. 1–5.

Referring now to Figs. 11 and 12, each of the transverse separators 3*a* are provided with a lower opening for assembly on the shaft 5 and an upper opening through which a shaft 46 extends, the shaft 46 extending longitudinally of the tray substantially parallel to the shaft 5. Each of the longitudinal separators 4*a* includes a partition or wall portion 47 extending downwardly from the shaft 5. Each of the longitudinal separators is shaped for engagement with a cam positioned adjacent thereto. Thus, a portion of each of the longitudinal separators extends above the shaft 5, and this portion includes three teeth 48, a full tooth at the center and a partial tooth at each side. In order to effect a swinging movement of the longitudinal separators for release of ice blocks a plurality of cams 49 are arranged along the shaft 46, one of the cams being mounted above each of the longitudinal separators 4*a*, the cams being properly spaced by the transverse separators. Each of the cams 49 includes two teeth 50, 51 which are similar in shape to the teeth 48 provided on the longitudinal separators 4*a*. The shaft 46 is of square cross section and fits in similarly shaped openings in the cams 49 so that it provides a direct drive for the cams. The shaft and cam assembly may, if desired, be formed in any other suitable manner to provide camming surfaces which can be turned by the shaft to engage the longitudinal separators.

In order that ice blocks may be removed successively from the tray rather than concurrently, adjacent cams 49 are preferably displaced successively 90° with respect to each other. Thus the right-hand cam 49 is arranged as illustrated by the solid lines in Fig. 12, the next cam is arranged with the teeth directed toward the left, as shown by one set of dotted lines in Fig. 12, the third cam is arranged with the teeth directed upwardly as shown by another set of dotted lines in Fig. 12, and so on. If desired, of course, all the cams may be arranged with the teeth in the same direction so that the concurrent release of ice blocks may be effected or, by way of example, half of the cams may be arranged in angular alignment and the remainder displaced 180°.

In order to maintain the longitudinal separators 4*a* in a vertical position and to return the separators to the vertical position after they have been shifted for release of ice blocks, a longitudinally extending resilient member or spring clip 52 is provided. The spring clip includes inwardly extending resilient lips 53, 54 which press against the side teeth 48 of the longitudinal separators 4*a* and is provided with slots 55 in order to permit assembly about the transverse separators 3*a*. In order to support the spring clip 52 the operating arm 45*a* is arranged beneath one end of the spring clip and a stationary supporting member 56, which is similar in shape to the arm 45*a*, is arranged beneath the opposite end of the spring clip, the supporting member 56 being mounted on the shaft 5. The spring clip may be positively secured to the supporting member 56, as by brazing, to fix the clip in position, but it merely rests on the arm 45*a* in order to permit the necessary movement of the arm for releasing the partition assembly from the tray. In order to furnish additional stability the arm 45*a* and the supporting member 56 are provided with ears 57, which in the assembled position extend outwardly above the rim of the tray.

A handle 58 is provided for engagement with the shaft 46 in order to facilitate the turning of the shaft for releasing ice blocks. Although the handle has been illustrated fixed to the shaft it may, if desired, be arranged in detachable removable engagement with the shaft so that a single handle may be used with several trays.

The relation of the various parts during the ice releasing operation is illustrated in Fig. 13. When it is desired to release ice blocks the handle 58 is turned. In Fig. 13 the handle has been turned in a clockwise direction carrying with it the cam 49 illustrated in this figure. As the cam 49 moves in a clockwise direction the tooth 50 presses against the central tooth 48 of the adjacent longitudinal separator 4*a* and causes the separator to move in a counterclockwise direction about its shaft 5. This relative movement between the longitudinal separator and the adjacent stationary transverse separators and tray breaks loose the ice block adjacent the right-hand side of the longitudinal separator 4*a*. Continued movement of the cam 49 causes a further counterclockwise movement of the longitudinal separator, thereby moving the ice block outwardly and upwardly for removal from the tray in a manner similar to that described in connection with the modifications shown in Figs. 1 through 9. As the longitudinal separator is moved in the manner described the inwardly extending lip 53 of the spring clip 52 is forced from the solid line position to the dotted line position, and this clip will then effect a positive return of the longitudinal separator to its vertical position when the handle is returned to its original position or when the cam tooth 50 is turned beyond the teeth 48 on the longitudinal separator. Should the longitudinal separator fail to return under the action of the spring clip, it may be positively returned by engagement of the cam 49 with one of the half teeth 48. Thus should the longitudinal separator remain in the position indicated by the dotted lines in Fig. 13 a reversal of the rotation of the cam 49 first causes the tooth 50 to engage the right-hand half tooth 48 to return the longitudinal separator to its vertical position. Further movement of the cam in the counterclockwise direction then brings the tooth 51 into engagement with the central tooth 48 of the longi-

tudinal separator to effect release of the left-hand ice block.

It will be noted from Fig. 13 that the teeth 48 of the longitudinal separators and the teeth 50, 51 of the cams are shaped so as to secure the exertion of the maximum force on the longitudinal separators during the initial movement of the cam when the greatest force is required for release of the ice block, and to give a maximum travel of the longitudinal separator after the ice block has been broken loose and is merely being moved outwardly and upwardly for removal from the tray. Thus when the handle is first turned for breaking loose the ice block the force is exerted between the cam and the longitudinal separator at the point 59, which gives a substantial lever arm between the center of the shaft 5 and the point 59. As the turning movement progresses the point of contact between the tooth 50 and the tooth 48 approaches closer to the center of the shaft 5, and the lever arm is correspondingly reduced to increase the travel of the longitudinal separator. This arrangement, therefore, combines the exertion of a substantial force during the initial movement of the handle when it is required for the breaking loose of ice blocks with an increased travel of the longitudinal separator during the final movement of the handle when such increased travel is required to move the ice blocks a sufficient distance outwardly and upwardly for easy removal from the tray and when a substantial force is no longer required.

As the handle is turned in the clockwise direction ice blocks will be successively removed from the right-hand side of the tray as viewed in Fig. 13, each 90° rotation causing the release of an additional ice block. With the cams displaced 90° as previously described, if a partition assembly providing eight ice block compartments longitudinally is used, two of the cams will be in the same position and consequently two ice blocks will be released from the right-hand side of the tray during one operation. It will be apparent, however, that, if it is desired to limit the release to one ice block at a time, the cams may be arranged with a 45° displacement with respect to each other so that only one will be effective at a time to release an ice block. To release the ice blocks located on the left-hand side of the tray the handle 58 is turned in a counterclockwise direction and the reverse movement of the longitudinal separators takes place. Alternatively, if the handle is arranged for removable engagement with the shaft, it may be shifted to the opposite end of the shaft and clockwise movement of the handle employed to release the remaining ice blocks.

A further modification is illustrated in Figs. 14 through 18, and parts corresponding to those previously described have been designated by the same numerals. In this alternative form the swinging of the longitudinal separators for the release of ice blocks is accomplished by a crankshaft positioned substantially parallel to the shaft on which the separators are mounted, and the crank arms are positioned for successively engaging the longitudinal separators as the crankshaft is turned.

Transverse separators or partition elements 3*a* and longitudinal separators or partition elements 4*b* are alternately assembled on a shaft 5 to form a partition assembly. The shaft is mounted in indentations or recesses 6*a* formed in a tray in the manner described in connection with the modification shown in Figs. 6 through 9. In order to removably retain the shaft and the partition assembly in the tray a resilient member or spring clip 60 is provided, this member including retainers 61, 62 which are arranged to cover the top openings of the recess 6*a*. Although both recesses 6*a* have been shown open at the top it will be apparent that only one recess need be so formed. In order to permit assembly about the transverse separators the spring clip 60 is provided with slots similar to the slots 55 in spring clip 52. In order to swing the longitudinal separators for effecting release of ice blocks from the tray, a crank shaft 63 having a plurality of crank arms 64 is mounted above the shaft 5 and extends in parallel relation thereto. The shaft is supported within suitable openings provided in the transverse separators 3*a*. A handle 65 is provided for turning the crank shaft 63. The handle may be rigidly secured to an end of the crank shaft 63, if desired, but preferably it is made detachable so that one handle may be used with several trays. Both ends of the shaft 63 are provided with flat portions 66, and an opening of similar cross section is provided in the cooperating portion of the handle 65. In this way the handle may be placed in engagement with either end of the crank shaft 63. Although a crank type handle has been illustrated, it will be apparent that a handle similar to that shown in Figs. 10–13 may be used.

Referring now to Fig. 17, each of the transverse separators 3*a* is provided with an opening for assembly on the shaft 5 and with a second opening above the first within which second opening the crank shaft 63 is mounted. Each of the longitudinal separators 4*b* includes a downwardly extending partition or wall portion 67. Each of the longitudinal separators further includes an upwardly extending projection or boss 68 which is arranged for engagement by the crank arms 64. In order to retain the longitudinal separators 4*b* in a vertical position and to return the separators to this position after they have been displaced during the ice releasing operation the resilient member 60 is provided with inwardly extending lips 69, 70, which are arranged to engage the boss 68 on each of the longitudinal separators.

The relation of the various parts during the ice releasing operation is illustrated in Fig. 18. When release of ice blocks is desired the handle 65 is turned in either a clockwise or counterclockwise direction. In Fig. 18 the solid line illustrates the position of one of the crank arms 64 after the handle, and hence the crank shaft, have been turned in a clockwise direction. The crank arm 64 presses against the boss 68 of the adjacent longitudinal separator and forces the boss to the left causing a counterclockwise movement of the longitudinal separator from the dotted line position to the solid line position. The initial movement of the longitudinal separator breaks loose the right-hand block adjacent the longitudinal separator and further movement shifts the block outwardly and upwardly for removal from the tray in the manner described in connection with previous modifications. During this movement of the longitudinal separator the lip 70 of the resilient member 60 adjacent the longitudinal separator is moved from the dotted line position to the solid line position. When the handle is returned to its original position or when the crank arm 64 passes beyond the boss 68 the resilience of the lip 70 forces the longitudinal separator back to its vertical position. Further movement

of the handle in a clockwise direction brings successive crank arms 64 into engagement with their corresponding longitudinal separators and ultimately effects release of all of the ice blocks along the right-hand side of the tray, as viewed in Fig. 18. To release the ice blocks on the left-hand side of the tray the handle is moved in a counterclockwise direction or, if desired, the handle may be shifted to the opposite end of the crank shaft 63 and again turned in a clockwise direction.

In Figs. 14 through 18 the crank shaft has been illustrated with its successive crank arms displaced 90° with respect to each other. Should a freezing tray with a partition assembly having space for eight blocks longitudinally be employed, this arrangement of the crank arms would cause two of the crank arms to simultaneously engage their adjacent longitudinal separators, and accordingly two ice blocks would be released simultaneously. If it is desired to limit the release to a single ice block the successive crank arms could, of course, be displaced 45° with respect to each other, so that only one crank arm at a time would engage its respective longitudinal separator. Conversely, if it be desired to release more than two ice blocks at a time the successive crank arms could be displaced, for example, 180° with respect to each other.

While I have illustrated and described particular embodiments of my invention, it will be apparent that my invention is not limited to the details of construction shown and described, and I intend by the appended claims to cover all modifications within the spirit and scope of my invention.

What I claim as new and desire to secure by Letters Patent of the United States is:

1. In combination, a freezing tray and a partition assembly therefor, said assembly comprising a plurality of transverse partition elements spaced longitudinally along said tray and longitudinal partition elements extending between said transverse elements, means for retaining said transverse and longitudinal elements in assembled relation and for affording swinging movement of said longitudinal elements about longitudinal axes above the level of ice in said tray, and a handle slidable longitudinally of said tray for swinging said longitudinal elements individually to release ice blocks adjacent thereto.

2. In combination with a freezing tray, a partition assembly adapted to form walls of a plurality of ice block compartments, said assembly including a shaft extending longitudinally of said tray, a plurality of transverse partition elements mounted on said shaft and forming walls of said ice block compartments, a plurality of longitudinal partition elements mounted on said shaft and forming walls of said ice block compartments, said longitudinal partition elements being arranged for swinging movement about said shaft, and a handle slidable longitudinally of said tray for swinging said longitudinal partition elements to break the frozen bond between said walls and the ice blocks.

3. In combination with a freezing tray, a partition assembly adapted to form walls of a plurality of ice block compartments, said assembly including a shaft extending longitudinally of said tray, a plurality of transverse partition elements mounted on said shaft and forming walls of said ice block compartments, a plurality of longitudinal partition elements mounted on said shaft and forming walls of said ice block compartments, said longitudinal partition elements being arranged for swinging movement about said shaft, and means for swinging any selected one of said longitudinal partition elements to release at least one of the ice blocks adjacent the selected partition element.

4. In combination with a freezing tray, a partition assembly adapted to form walls of a plurality of ice block compartments, said assembly including a shaft mounted on the upper portion of said tray and extending longitudinally thereof, a plurality of transverse partition elements mounted on said shaft in spaced relationship and extending downwardly from said shaft to form walls of said ice block compartments, a plurality of longitudinal partition elements mounted on said shaft and extending downwardly therefrom to form walls of said ice block compartments, said longitudinal partition elements being arranged for swinging movement about said shaft, and a handle slidable longitudinally of said tray for moving said longitudinal partition elements to break the frozen bond between said walls and the ice blocks.

5. In combination with a freezing tray, a partition assembly adapted to form walls of a plurality of ice block compartments, said assembly including a shaft extending longitudinally of said tray, a plurality of transverse partition elements mounted on said shaft and forming walls of said ice block compartments, a plurality of longitudinal partition elements mounted for swinging movement on said shaft and forming walls of said ice block compartments, said longitudinal partition elements including aligned guides, and a handle arranged for sliding movement along said guides for positioning in engagement with any selected one of said longitudinal partition elements, said handle being arranged for swinging the selected longitudinal partition element to release at least one of the ice blocks located adjacent said partition element.

6. In combination with a freezing tray, a partition assembly adapted to form walls of a plurality of ice block compartments, said assembly including a shaft extending longitudinally of said tray, a plurality of transverse partition elements mounted on said shaft and forming walls of said ice block compartments, a plurality of longitudinal partition elements mounted for swinging movement on said shaft and forming walls of said ice block compartments, said longitudinal partition elements including aligned guides, a handle assembly for effecting release of ice blocks, said handle assembly including a slidable element movable along said guides for positioning in engagement with any selected one of said longitudinal partition elements, and a handle pivoted on said slidable element for movement from a position substantially parallel to said shaft to a second position substantially perpendicular to said shaft, said handle being adapted when in said second position for movement in a plane transverse of said tray whereby a swinging movement of said handle imparts a corresponding movement to said one of said longitudinal partition elements for effecting release of at least one of the ice blocks adjacent the selected longitudinal partition element.

7. In combination with a freezing tray, a partition assembly adapted to form walls of a plurality of ice block compartments, said assembly including a shaft extending longitudinally of said tray, a plurality of transverse partition elements mounted on said shaft and forming walls of said ice block compartments, said transverse

partition elements being held stationary when said partition assembly is mounted in said tray, a plurality of longitudinal partition elements mounted on said shaft and forming walls of said ice block compartments, said longitudinal partition elements being arranged for swinging movement about said shaft, and means for swinging any selected longitudinal partition element whereby the movement of said selected longitudinal partition element relative to adjacent transverse partition elements effects release of at least one of the ice blocks adjacent the selected longitudinal partition element.

8. In combination with a freezing tray, a partition assembly adapted to form walls of a plurality of ice block compartments, said assembly including a shaft extending longitudinally of said tray, a plurality of transverse partition elements mounted on said shaft and extending downwardly therefrom to form walls of said ice block compartments, a plurality of longitudinal partition elements mounted on said shaft and extending downwardly therefrom to form walls of said ice block compartments, each of said longitudinal partition elements including a portion extending above the axis of said shaft and provided with laterally extending lips, and a handle including inwardly extending lips arranged to engage said laterally extending lips, said handle being arranged for swinging said longitudinal partition elements to break the frozen bond between said walls and the ice blocks.

9. In combination with a freezing tray, a partition assembly adapted to form walls of a plurality of ice block compartments, said assembly including a shaft extending longitudinally of said tray, a plurality of transverse partition elements mounted on said shaft and forming walls of said ice block compartments, a plurality of longitudinal partition elements mounted for swinging movement on said shaft and forming walls of said ice block compartments, said tray including indentations for receiving said shaft, and a resilient element extending longitudinally of said tray and engaging said longitudinal partition elements to maintain said longitudinal partition elements in alignment, said resilient element including a retaining portion removably mounted on said tray for covering at least one of

said indentations to maintain said partition assembly in position within said tray.

10. A partition assembly for freezing trays comprising a plurality of spaced parallel transverse partition elements, a plurality of longitudinal partition elements intermediate said transverse partition elements and substantially perpendicular thereto, means for retaining said partition elements in assembled relation and for affording swinging movement of said longitudinal elements about longitudinal axes in the upper portion of the partition assembly, and a handle slidable along said longitudinal partition elements for swinging said longitudinal elements.

11. A partition assembly for freezing trays comprising a plurality of spaced parallel transverse partition elements, a plurality of longitudinal partition elements intermediate said transverse partition elements and substantially perpendicular thereto, a longitudinally-extending shaft for retaining said partition elements in assembled relation and for affording swinging movement of said longitudinal elements about said shaft, and means for swinging any selected one of said longitudinal elements.

12. A partition assembly for freezing trays comprising a plurality of spaced parallel transverse partition elements, a plurality of longitudinal partition elements intermediate said transverse partition elements and substantially perpendicular thereto, means for retaining said partition elements in assembled relation and for affording swinging movement of said longitudinal elements about longitudinal axes, said longitudinal elements including aligned guides, and a handle arranged for sliding movement along said guides for positioning in engagement with any selected one of said longitudinal elements, said handle being arranged for swinging the selected longitudinal element.

ROBERT R. HOBSON.

REFERENCES CITED

The following references are of record in the file of this patent:

UNITED STATES PATENTS

Number	Name	Date
2,435,802	Smith	Feb. 10, 1948