(12) INTERNATIONAL APPLICATION PUBLISHED UNDER THE PATENT COOPERATION TREATY (PCT)

(19) World Intellectual Property Organization
International Bureau

(43) International Publication Date
18 May 2012 (18.05.2012)

PCT

(10) International Publication Number
WO 2012/064837 A2

(51) International Patent Classification:
H04W 52/02 (2009.01)

(21) International Application Number:
PCT/US2011/059965

(22) International Filing Date:
9 November 2011 (09.11.2011)

(25) Filing Language: English

(26) Publication Language: English

(30) Priority Data:
61/411,905 9 November 2010 (09.11.2010) US
61/414,872 17 November 2010 (17.11.2010) US
13/291,142 8 November 2011 (08.11.2011) US

(71) Applicant *(for all designated States except US)*: **QUALCOMM INCORPORATED** [US/US]; Attn: International Ip Administration, 5775 Morehouse Drive, San Diego, California 92121 (US).

(72) Inventor; and

(75) Inventor/Applicant *(for US only)*: **WENTINK, Maarten Menzo** [NL/NL]; 5775 Morehouse Drive, San Diego, California 92121 (US).

(74) Agent: **VO, Dang M.**; Attn: International IP Administration, 5775 Morehouse Drive, San Diego, California 92121 (US).

(81) Designated States *(unless otherwise indicated, for every kind of national protection available)*: AE, AG, AL, AM, AO, AT, AU, AZ, BA, BB, BG, BH, BR, BW, BY, BZ, CA, CH, CL, CN, CO, CR, CU, CZ, DE, DK, DM, DO, DZ, EC, EE, EG, ES, FI, GB, GD, GE, GH, GM, GT, HN, HR, HU, ID, IL, IN, IS, JP, KE, KG, KM, KN, KP, KR, KZ, LA, LC, LK, LR, LS, LT, LU, LY, MA, MD, ME, MG, MK, MN, MW, MX, MY, MZ, NA, NG, NI, NO, NZ, OM, PE, PG, PH, PL, PT, QA, RO, RS, RU, RW, SC, SD, SE, SG, SK, SL, SM, ST, SV, SY, TH, TJ, TM, TN, TR, TT, TZ, UA, UG, US, UZ, VC, VN, ZA, ZM, ZW.

(84) Designated States *(unless otherwise indicated, for every kind of regional protection available)*: ARIPO (BW, GH, GM, KE, LR, LS, MW, MZ, NA, RW, SD, SL, SZ, TZ, UG, ZM, ZW), Eurasian (AM, AZ, BY, KG, KZ, MD, RU, TJ, TM), European (AL, AT, BE, BG, CH, CY, CZ, DE, DK, EE, ES, FI, FR, GB, GR, HR, HU, IE, IS, IT, LT, LU, LV, MC, MK, MT, NL, NO, PL, PT, RO, RS, SE, SI, SK, SM, TR), OAPI (BF, BJ, CF, CG, CI, CM, GA, GN, GQ, GW, ML, MR, NE, SN, TD, TG).

Declarations under Rule 4.17:

— *as to applicant's entitlement to apply for and be granted a patent (Rule 4.17(ii))*

[Continued on next page]

(54) Title: PHYSICAL LAYER POWER SAVE FACILITY

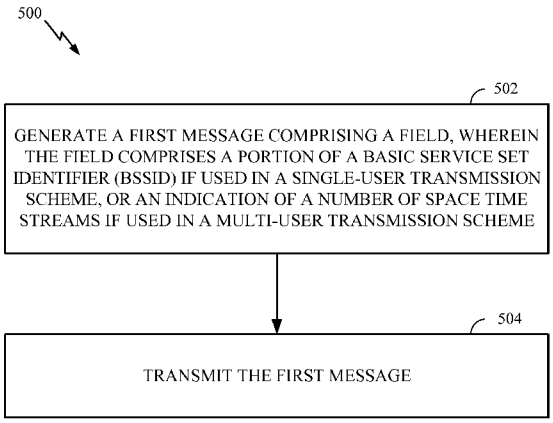

FIG. 5

(57) Abstract: Certain aspects of the present disclosure propose a method to transmit information in unused fields of a physical layer header to improve performance of the system. The proposed method transmits, during single user transmission, a portion of the basic service set identifier (BSSID) of an access point in a field of a header that is usually used to indicate number of space time streams (Nsts).

WO 2012/064837 A2

— *as to the applicant's entitlement to claim the priority of the earlier application (Rule 4.17(iii))*

Published:

— *without international search report and to be republished upon receipt of that report (Rule 48.2(g))*

PHYSICAL LAYER POWER SAVE FACILITY

CROSS-REFERENCE TO RELATED APPLICATIONS

[0001] This application claims benefit of U.S. Provisional Patent Application Serial No. 61/411,905 (Atty. Dkt. No. 110407P1), filed November 9, 2010, and U.S. Provisional Patent Application Serial No. 61/414,872 (Atty. Dkt. No. 110474P1), filed November 17, 2010, both herein incorporated by reference.

TECHNICAL FIELD

[0002] Certain aspects of the present disclosure generally relate to wireless communications and, more particularly, to utilizing unused bits in a packet for transmitting power-saving information.

BACKGROUND

[0003] In order to address the issue of increasing bandwidth requirements that are demanded for wireless communications systems, different schemes are being developed to allow multiple user terminals to communicate with a single access point by sharing the channel resources while achieving high data throughputs. Multiple Input or Multiple Output (MIMO) technology represents one such approach that has recently emerged as a popular technique for the next generation communication systems. MIMO technology has been adopted in several emerging wireless communications standards such as the Institute of Electrical and Electronics Engineers (IEEE) 802.11 standard. IEEE 802.11 denotes a set of Wireless Local Area Network (WLAN) air interface standards developed by the IEEE 802.11 committee for short-range communications (e.g., tens of meters to a few hundred meters).

[0004] A MIMO wireless system employs a number (N_T) of transmit antennas and a number (N_R) of receive antennas for data transmission. A MIMO channel formed by the N_T transmit and N_R receive antennas may be decomposed into N_S spatial streams, where, for all practical purposes, $NS <= min \{N_T, NR\}$. The N_S spatial streams may be used to transmit N_S independent data streams to achieve greater overall throughput.

[0005] In wireless networks with a single access point and multiple stations, concurrent transmissions may occur on multiple channels toward different stations, both in the uplink and downlink directions.

SUMMARY

[0006] Certain aspects of the present disclosure provide a method for wireless communications. The method generally includes generating a first message comprising a field, wherein the field comprises a portion of a basic service set identifier (BSSID) if used in a single-user transmission scheme, or an indication of a number of space time streams if used in a multi-user transmission scheme, and transmitting the first message.

[0007] Certain aspects of the present disclosure provide an apparatus for wireless communications. The apparatus generally includes circuit configured to generate a first message comprising a field, wherein the field comprises a portion of a basic service set identifier (BSSID) if used in a single-user transmission scheme, or an indication of a number of space time streams if used in a multi-user transmission scheme, and a transmitter configured to transmit the first message.

[0008] Certain aspects of the present disclosure provide an apparatus for wireless communications. The apparatus generally includes means for generating a first message comprising a field, wherein the field comprises a portion of a basic service set identifier (BSSID) if used in a single-user transmission scheme, or an indication of a number of space time streams if used in a multi-user transmission scheme, and means for transmitting the first message.

[0009] Certain aspects provide a computer-program product for wireless communications. The computer-program product includes a computer-readable medium comprising instructions executable to generate a first message comprising a field, wherein the field comprises a portion of a basic service set identifier (BSSID) if used in a single-user transmission scheme, or an indication of a number of space time streams if used in a multi-user transmission scheme, and transmit the first message.

[0010] Certain aspects of the present disclosure provide an access terminal for wireless communications. The access terminal generally includes at least one antenna, circuit configured to generate a first message comprising a field, wherein the field

comprises a portion of a basic service set identifier (BSSID) if used in a single-user transmission scheme, or an indication of a number of space time streams if used in a multi-user transmission scheme, and a transmitter configured to transmit, via the at least one antenna, the first message.

[0011] Certain aspects of the present disclosure provide a method for wireless communications. The method generally includes assigning one or more association identifiers (AIDs) to one or more apparatuses, wherein the one or more AIDs are different from a portion of the basic service set identifier (BSSID) of an apparatus, and notifying the one or more apparatuses of the assigned AIDs.

[0012] Certain aspects of the present disclosure provide an apparatus for wireless communications. The apparatus generally includes circuit configured to assign one or more association identifiers (AIDs) to one or more apparatuses, wherein the one or more AIDs are different from a portion of the basic service set identifier (BSSID) of the apparatus, and circuit configured to notify the one or more apparatuses of the assigned AIDs.

[0013] Certain aspects of the present disclosure provide an apparatus for wireless communications. The apparatus generally includes means for assigning one or more association identifiers (AIDs) to one or more apparatuses, wherein the one or more AIDs are different from a portion of the basic service set identifier (BSSID) of an apparatus, and means for notifying the one or more apparatuses of the assigned AIDs.

[0014] Certain aspects provide a computer-program product for wireless communications. The computer-program product includes a computer-readable medium comprising instructions executable to assign one or more association identifiers (AIDs) to one or more apparatuses, wherein the one or more AIDs are different from a portion of the basic service set identifier (BSSID) of the apparatus, and notify the one or more apparatuses of the assigned AIDs.

[0015] Certain aspects of the present disclosure provide an access point for wireless communications. The access point generally includes A plurality of antennas, circuit configured to assign one or more association identifiers (AIDs) to one or more apparatuses, wherein the one or more AIDs are different from a portion of the basic

service set identifier (BSSID) of the apparatus, and circuit configured to notify, via the plurality of antennas, the one or more apparatuses of the assigned AIDs.

BRIEF DESCRIPTION OF THE DRAWINGS

[0016] So that the manner in which the above-recited features of the present disclosure can be understood in detail, a more particular description, briefly summarized above, may be had by reference to aspects, some of which are illustrated in the appended drawings. It is to be noted, however, that the appended drawings illustrate only certain typical aspects of this disclosure and are therefore not to be considered limiting of its scope, for the description may admit to other equally effective aspects.

[0017] FIG. 1 illustrates a diagram of a wireless communications network in accordance with certain aspects of the present disclosure.

[0018] FIG. 2 illustrates a block diagram of an example access point and user terminals in accordance with certain aspects of the present disclosure.

[0019] FIG. 3 illustrates a block diagram of an example wireless device in accordance with certain aspects of the present disclosure.

[0020] FIGS. 4A-4C illustrate example packets that may be transmitted in single user or multi-user transmission schemes, in accordance with certain aspects of the present disclosure.

[0021] FIG. 5 illustrates example operations for facilitating power savings that may be performed by a station, in accordance with certain aspects of the present disclosure.

[0022] FIG. 5A illustrates example components capable of performing the operations shown in FIG. 5.

[0023] FIG. 6 illustrates example operations for facilitating power savings that may be performed by an access point, in accordance with certain aspects of the present disclosure.

[0024] FIG. 6A illustrates example components capable of performing the operations shown in FIG. 6.

DETAILED DESCRIPTION

[0025] Various aspects of certain aspects of the present disclosure are described below. It should be apparent that the teachings herein may be embodied in a wide variety of forms and that any specific structure, function, or both being disclosed herein is merely representative. Based on the teachings herein one skilled in the art should appreciate that an aspect disclosed herein may be implemented independently of any other aspects and that two or more of these aspects may be combined in various ways. For example, an apparatus may be implemented or a method may be practiced using any number of the aspects set forth herein. In addition, such an apparatus may be implemented or such a method may be practiced using other structure, functionality, or structure and functionality in addition to or other than one or more of the aspects set forth herein. Furthermore, an aspect may comprise at least one element of a claim.

[0026] The word "exemplary" is used herein to mean "serving as an example, instance, or illustration." Any aspect described herein as "exemplary" is not necessarily to be construed as preferred or advantageous over other aspects. Also as used herein, the term "legacy stations" generally refers to wireless network nodes that support the Institute of Electrical and Electronics Engineers (IEEE) 802.11n or earlier versions of the IEEE 802.11 standard.

[0027] The multi-antenna transmission techniques described herein may be used in combination with various wireless technologies such as Code Division Multiple Access (CDMA), Orthogonal Frequency Division Multiplexing (OFDM), Time Division Multiple Access (TDMA), Spatial Division Multiple Access (SDMA), and so on. Multiple user terminals can concurrently transmit/receive data via different (1) orthogonal code channels for CDMA, (2) time slots for TDMA, or (3) sub-bands for OFDM. A CDMA system may implement IS-2000, IS-95, IS-856, Wideband-CDMA (W-CDMA), or some other standards. An OFDM system may implement IEEE 802.11 or some other standards. A TDMA system may implement GSM or some other standards. These various standards are known in the art.

AN EXAMPLE MIMO SYSTEM

[0028] FIG. 1 illustrates a multiple-access MIMO system 100 with access points and user terminals. For simplicity, only one access point 110 is shown in FIG. 1. An

access point (AP) is generally a fixed station that communicates with the user terminals and may also be referred to as a base station or some other terminology. A user terminal may be fixed or mobile and may also be referred to as a mobile station, a station (STA), a client, a wireless device, or some other terminology. A user terminal may be a wireless device, such as a cellular phone, a personal digital assistant (PDA), a handheld device, a wireless modem, a laptop computer, a personal computer, etc.

[0029] Access point 110 may communicate with one or more user terminals 120 at any given moment on the downlink and uplink. The downlink (i.e., forward link) is the communication link from the access point to the user terminals, and the uplink (i.e., reverse link) is the communication link from the user terminals to the access point. A user terminal may also communicate peer-to-peer with another user terminal. A system controller 130 couples to and provides coordination and control for the access points.

[0030] System 100 employs multiple transmit and multiple receive antennas for data transmission on the downlink and uplink. Access point 110 is equipped with a number N_{ap} of antennas and represents the multiple-input (MI) for downlink transmissions and the multiple-output (MO) for uplink transmissions. A set N_u of selected user terminals 120 collectively represents the multiple-output for downlink transmissions and the multiple-input for uplink transmissions. In certain cases, it may be desirable to have $N_{ap} \geq N_u \geq 1$ if the data symbol streams for the N_u user terminals are not multiplexed in code, frequency, or time by some means. N_u may be greater than N_{ap} if the data symbol streams can be multiplexed using different code channels with CDMA, disjoint sets of sub-bands with OFDM, and so on. Each selected user terminal transmits user-specific data to and/or receives user-specific data from the access point. In general, each selected user terminal may be equipped with one or multiple antennas (i.e., $N_{ut} \geq 1$). The N_u selected user terminals can have the same or different number of antennas.

[0031] MIMO system 100 may be a time division duplex (TDD) system or a frequency division duplex (FDD) system. For a TDD system, the downlink and uplink share the same frequency band. For an FDD system, the downlink and uplink use different frequency bands. MIMO system 100 may also utilize a single carrier or multiple carriers for transmission. Each user terminal may be equipped with a single antenna (e.g., in order to keep costs down) or multiple antennas (e.g., where the additional cost can be supported).

[0032] FIG. 2 shows a block diagram of access point 110 and two user terminals 120m and 120x in MIMO system 100. Access point 110 is equipped with N_{ap} antennas 224a through 224ap. User terminal 120m is equipped with $N_{ut,m}$ antennas 252ma through 252mu, and user terminal 120x is equipped with $N_{ut,x}$ antennas 252xa through 252xu. Access point 110 is a transmitting entity for the downlink and a receiving entity for the uplink. Each user terminal 120 is a transmitting entity for the uplink and a receiving entity for the downlink. As used herein, a "transmitting entity" is an independently operated apparatus or device capable of transmitting data via a frequency channel, and a "receiving entity" is an independently operated apparatus or device capable of receiving data via a frequency channel. In the following description, the subscript "*dn*" denotes the downlink, the subscript "*up*" denotes the uplink, N_{up} user terminals are selected for simultaneous transmission on the uplink, N_{dn} user terminals are selected for simultaneous transmission on the downlink, N_{up} may or may not be equal to N_{dn}, and N_{up} and N_{dn} may be static values or can change for each scheduling interval. The beam-steering or some other spatial processing technique may be used at the access point and user terminal.

[0033] On the uplink, at each user terminal 120 selected for uplink transmission, a TX data processor 288 receives traffic data from a data source 286 and control data from a controller 280. TX data processor 288 processes (e.g., encodes, interleaves, and modulates) the traffic data $\{d_{up,m}\}$ for the user terminal based on the coding and modulation schemes associated with the rate selected for the user terminal and provides a data symbol stream $\{s_{up,m}\}$. A TX spatial processor 290 performs spatial processing on the data symbol stream $\{s_{up,m}\}$ and provides $N_{ut,m}$ transmit symbol streams for the $N_{ut,m}$ antennas. Each transmitter unit (TMTR) 254 receives and processes (e.g., converts to analog, amplifies, filters, and frequency upconverts) a respective transmit symbol stream to generate an uplink signal. $N_{ut,m}$ transmitter units 254 provide $N_{ut,m}$ uplink signals for transmission from $N_{ut,m}$ antennas 252 to the access point 110.

[0034] A number N_{up} of user terminals may be scheduled for simultaneous transmission on the uplink. Each of these user terminals performs spatial processing on its data symbol stream and transmits its set of transmit symbol streams on the uplink to the access point.

[0035] At access point 110, N_{ap} antennas 224a through 224ap receive the uplink signals from all N_{up} user terminals transmitting on the uplink. Each antenna 224 provides a received signal to a respective receiver unit (RCVR) 222. Each receiver unit 222 performs processing complementary to that performed by transmitter unit 254 and provides a received symbol stream. An RX spatial processor 240 performs receiver spatial processing on the N_{ap} received symbol streams from N_{ap} receiver units 222 and provides N_{up} recovered uplink data symbol streams. The receiver spatial processing is performed in accordance with the channel correlation matrix inversion (CCMI), minimum mean square error (MMSE), successive interference cancellation (SIC), or some other technique. Each recovered uplink data symbol stream $\{s_{up,m}\}$ is an estimate of a data symbol stream $\{s_{up,m}\}$ transmitted by a respective user terminal. An RX data processor 242 processes (e.g., demodulates, deinterleaves, and decodes) each recovered uplink data symbol stream $\{s_{up,m}\}$ in accordance with the rate used for that stream to obtain decoded data. The decoded data for each user terminal may be provided to a data sink 244 for storage and/or a controller 230 for further processing.

[0036] On the downlink, at access point 110, a TX data processor 210 receives traffic data from a data source 208 for N_{dn} user terminals scheduled for downlink transmission, control data from a controller 230 and possibly other data from a scheduler 234. The various types of data may be sent on different transport channels. TX data processor 210 processes (e.g., encodes, interleaves, and modulates) the traffic data for each user terminal based on the rate selected for that user terminal. TX data processor 210 provides N_{dn} downlink data symbol streams for the N_{dn} user terminals. A TX spatial processor 220 performs spatial processing on the N_{dn} downlink data symbol streams, and provides N_{ap} transmit symbol streams for the N_{ap} antennas. Each transmitter unit (TMTR) 222 receives and processes a respective transmit symbol stream to generate a downlink signal. N_{ap} transmitter units 222 provide N_{ap} downlink signals for transmission from N_{ap} antennas 224 to the user terminals.

[0037] At each user terminal 120, $N_{ut,m}$ antennas 252 receive the N_{ap} downlink signals from access point 110. Each receiver unit (RCVR) 254 processes a received signal from an associated antenna 252 and provides a received symbol stream. An RX spatial processor 260 performs receiver spatial processing on $N_{ut,m}$ received symbol streams from $N_{ut,m}$ receiver units 254 and provides a recovered downlink data symbol

stream $\{s_{dn,m}\}$ for the user terminal. The receiver spatial processing is performed in accordance with the CCMI, MMSE, or some other technique. An RX data processor 270 processes (e.g., demodulates, deinterleaves, and decodes) the recovered downlink data symbol stream to obtain decoded data for the user terminal.

[0038] At each user terminal 120, $N_{ut,m}$ antennas 252 receive the N_{ap} downlink signals from access point 110. Each receiver unit (RCVR) 254 processes a received signal from an associated antenna 252 and provides a received symbol stream. An RX spatial processor 260 performs receiver spatial processing on $N_{ut,m}$ received symbol streams from $N_{ut,m}$ receiver units 254 and provides a recovered downlink data symbol stream $\{s_{dn,m}\}$ for the user terminal. The receiver spatial processing is performed in accordance with the CCMI, MMSE, or some other technique. An RX data processor 270 processes (e.g., demodulates, deinterleaves, and decodes) the recovered downlink data symbol stream to obtain decoded data for the user terminal.

[0039] FIG. 3 illustrates various components that may be utilized in a wireless device 302 that may be employed within the system 100. The wireless device 302 is an example of a device that may be configured to implement the various methods described herein. The wireless device 302 may be an access point 110 or a user terminal 120.

[0040] The wireless device 302 may include a processor 304 which controls operation of the wireless device 302. The processor 304 may also be referred to as a central processing unit (CPU). Memory 306, which may include both read-only memory (ROM) and random access memory (RAM), provides instructions and data to the processor 304. A portion of the memory 306 may also include non-volatile random access memory (NVRAM). The processor 304 typically performs logical and arithmetic operations based on program instructions stored within the memory 306. The instructions in the memory 306 may be executable to implement the methods described herein.

[0041] The wireless device 302 may also include a housing 308 that may include a transmitter 310 and a receiver 312 to allow transmission and reception of data between the wireless device 302 and a remote location. The transmitter 310 and receiver 312 may be combined into a transceiver 314. A plurality of transmit antennas 316 may be attached to the housing 308 and electrically coupled to the transceiver 314. The

wireless device 302 may also include (not shown) multiple transmitters, multiple receivers, and multiple transceivers.

[0042] The wireless device 302 may also include a signal detector 318 that may be used in an effort to detect and quantify the level of signals received by the transceiver 314. The signal detector 318 may detect such signals as total energy, energy per subcarrier per symbol, power spectral density and other signals. The wireless device 302 may also include a digital signal processor (DSP) 320 for use in processing signals.

[0043] The various components of the wireless device 302 may be coupled together by a bus system 322, which may include a power bus, a control signal bus, and a status signal bus in addition to a data bus.

[0044] Those skilled in the art will recognize the techniques described herein may be generally applied in systems utilizing any type of multiple access schemes, such as SDMA, OFDMA, CDMA, and combinations thereof.

PHYSICAL LAYER POWER SAVE FACILITY

[0045] Certain aspects of the present disclosure propose a method to transmit information in unused fields of a physical layer header to improve performance of the system. The proposed method transmits, during single user transmission, a portion of the basic service set identifier (BSSID) of an access point in a field of a header that is usually used to indicate number of space time streams (Nsts).

[0046] The IEEE 802.11ac standard, which is also referred to as Very High Throughput (VHT), supports high throughput operation of the network which is realized through several measures such as parallel transmissions to multiple stations (STAs) at once, or by using a wide channel bandwidth, such as 80 MHz or 160 MHz.

[0047] The 802.11ac physical (PHY) header format may contain a field named 'Number of Space Time Streams (Nsts)' field. The Nsts field may be required for multi-user (MU) transmissions, but it may partly be unused for single-user (SU) transmissions. For example, bits 13-21 (9 bits) of the Nsts field may be unused. These 9 bits of the Nsts field may be used to signal a partial association identifier (AID), so that stations (STAs) with a different partial AID can stop receiving a packet after having received a partial AID that is different from their own.

[0048] The access point does not assign an AID to itself, so it is undefined what the value of this 9-bit field should be for transmissions to the AP. Such transmissions to an AP are referred to as uplink transmissions.

[0049] For certain aspects, the unused Nsts field may be filled with a partial basic service set identifier (BSSID) for uplink single user (SU) packets, and with a partial AID for unicast downlink SU packets. The BSSID is the media access control (MAC) address of the AP, which implies that the 9-bit field of uplink SU transmissions contains the first 9 bits of the medium access control (MAC) address of the AP. Note that the 9 bits are exemplary only.

[0050] FIGS. 4A-4C illustrate example packets that may be transmitted in single user or multi-user transmission schemes, in accordance with certain aspects of the present disclosure.

[0051] FIG. 4A illustrates an example message format (e.g., a packet) which includes a PHY header 402A and a field 404 that may be used to transmit an indication of the number of space time streams (N_{STS}) when used for multi-user transmission.

[0052] FIG. 4B illustrates a message transmitted using single-user downlink transmission. The message may include a PHY header 402B field 406 with portion of the AID of a station for which the packet is targeted.

[0053] FIG. 4C illustrates a message transmitted using single user uplink transmission. The message may include a PHY header 402C with a field 408 with a portion of the BSSID of the access point for which the message is targeted.

[0054] For certain aspects, while assigning AIDs to STAs, the AP may skip AIDs with a partial AID equal to its partial BSSID (e.g., equal to the 9 least significant bits (LSBs) of its MAC address).

[0055] For certain aspects, while assigning AIDs to STAs, the AP may also skip partial BSSIDs of other APs in its neighborhood. These BSSIDs may be obtained through received Beacons from the surrounding APs.

[0056] Using a partial AID for unicast downlink SU packets may ensure that there will be no collisions within a BSS. In other words, each STA may have a unique value

inside PHY header directed at it, allowing all other STAs in the BSS to go back to sleep for the remaining duration of the packet (up to 510 devices, which is equal 512 values for a 9-bit field, less the broadcast partial AID (all 0s) and the partial BSSID of the AP).

[0057] For certain aspects, uplink transmissions may not collide within the BSS, but they may collide with the partial AID of STAs in other BSSs. However, the probability that this occurs is low. For certain aspects, an STA may request a different AID if it detects a collision with another AP or with a STA in another BSS.

[0058] FIG. 5 illustrates example operations 500 for facilitating power savings that may be performed by a station, in accordance with certain aspects of the present disclosure.

[0059] The operations begin, at 502, with the station generating a first message comprising a field, wherein the field comprises a portion of a basic service set identifier (BSSID) if used in a single-user transmission scheme, or an indication of a number of space time streams if used in a multi-user transmission scheme. At 504, the station transmits the first message to an access point. The station may also receive a second message comprising a field, wherein the field comprises a portion of an association identifier (AID) if the second message is transmitted utilizing a single-user transmission scheme, or an indication of number of space time streams if the second message is transmitted utilizing a multi-user transmission scheme.

[0060] For certain aspects, the station may compare the received AID with its AID and discarding the second message if the received AID is different from its AID.

[0061] FIG. 6 illustrates example operations 600 for facilitating power savings that may be performed by an access point, in accordance with certain aspects of the present disclosure.

[0062] The operations begin, at 602, with the access point assigning one or more association identifiers (AIDs) to one or more apparatuses, wherein the one or more AIDs are different from a portion of the basic service set identifier (BSSID) of an apparatus. At 604, the access point notifies the one or more apparatuses of the assigned AIDs.

[0063] The various operations of methods described above may be performed by any suitable means capable of performing the corresponding functions. The means may include various hardware and/or software component(s) and/or module(s), including, but not limited to a circuit, an application specific integrate circuit (ASIC), or processor. Generally, where there are operations illustrated in Figures, those operations may have corresponding counterpart means-plus-function components with similar numbering. For example, blocks 502-504 in FIG. 5 correspond to circuit blocks 502A-504A illustrated in FIG. 5A. In addition, blocks 602-604 in FIG. 6 correspond to circuit blocks 602A-604A illustrated in FIG. 6A.

[0064] For certain aspects, means for receiving comprises a receiver, means for transmitting comprises a transmitter and means for determining a transmission mode comprises a circuit configured to determine the transmission mode of the signal.

[0065] The various operations of methods described above may be performed by any suitable means capable of performing the operations, such as various hardware and/or software component(s), circuits, and/or module(s). Generally, any operations illustrated in the Figures may be performed by corresponding functional means capable of performing the operations.

[0066] It should be noted that means for transmitting comprises a transmitter, means for receiving comprises a receiver, means for generating comprises any suitable generating component such as a processor, means for assigning comprises any suitable assigning component such as a processor and means for notifying may comprise a transmitter.

[0067] As used herein, the term “determining” encompasses a wide variety of actions. For example, “determining” may include calculating, computing, processing, deriving, investigating, looking up (e.g., looking up in a table, a database or another data structure), ascertaining and the like. Also, “determining” may include receiving (e.g., receiving information), accessing (e.g., accessing data in a memory) and the like. Also, “determining” may include resolving, selecting, choosing, establishing and the like.

[0068] As used herein, the phrase "at least one of A or B" is meant to include any combination of A and B. In other words, "at least one of A or B" comprises the following set: [A], [B] and [A, B].

[0069] The various illustrative logical blocks, modules and circuits described in connection with the present disclosure may be implemented or performed with a general purpose processor, a digital signal processor (DSP), an application specific integrated circuit (ASIC), a field programmable gate array signal (FPGA) or other programmable logic device (PLD), discrete gate or transistor logic, discrete hardware components or any combination thereof designed to perform the functions described herein. A general purpose processor may be a microprocessor, but in the alternative, the processor may be any commercially available processor, controller, microcontroller or state machine. A processor may also be implemented as a combination of computing devices, e.g., a combination of a DSP and a microprocessor, a plurality of microprocessors, one or more microprocessors in conjunction with a DSP core, or any other such configuration.

[0070] The steps of a method or algorithm described in connection with the present disclosure may be embodied directly in hardware, in a software module executed by a processor, or in a combination of the two. A software module may reside in any form of storage medium that is known in the art. Some examples of storage media that may be used include random access memory (RAM), read only memory (ROM), flash memory, EPROM memory, EEPROM memory, registers, a hard disk, a removable disk, a CD-ROM and so forth. A software module may comprise a single instruction, or many instructions, and may be distributed over several different code segments, among different programs, and across multiple storage media. A storage medium may be coupled to a processor such that the processor can read information from, and write information to, the storage medium. In the alternative, the storage medium may be integral to the processor.

[0071] The methods disclosed herein comprise one or more steps or actions for achieving the described method. The method steps and/or actions may be interchanged with one another without departing from the scope of the claims. In other words, unless a specific order of steps or actions is specified, the order and/or use of specific steps and/or actions may be modified without departing from the scope of the claims.

[0072] The functions described may be implemented in hardware, software, firmware or any combination thereof. If implemented in software, the functions may be stored as one or more instructions on a computer-readable medium. A storage media may be any available media that can be accessed by a computer. By way of example,

and not limitation, such computer-readable media can comprise RAM, ROM, EEPROM, CD-ROM or other optical disk storage, magnetic disk storage or other magnetic storage devices, or any other medium that can be used to carry or store desired program code in the form of instructions or data structures and that can be accessed by a computer. Disk and disc, as used herein, include compact disc (CD), laser disc, optical disc, digital versatile disc (DVD), floppy disk, and Blu-ray® disc where disks usually reproduce data magnetically, while discs reproduce data optically with lasers.

[0073] Thus, certain aspects may comprise a computer program product for performing the operations presented herein. For example, such a computer program product may comprise a computer readable medium having instructions stored (and/or encoded) thereon, the instructions being executable by one or more processors to perform the operations described herein. For certain aspects, the computer program product may include packaging material.

[0074] Software or instructions may also be transmitted over a transmission medium. For example, if the software is transmitted from a website, server, or other remote source using a coaxial cable, fiber optic cable, twisted pair, digital subscriber line (DSL), or wireless technologies such as infrared, radio, and microwave, then the coaxial cable, fiber optic cable, twisted pair, DSL, or wireless technologies such as infrared, radio, and microwave are included in the definition of transmission medium.

[0075] Further, it should be appreciated that modules and/or other appropriate means for performing the methods and techniques described herein can be downloaded and/or otherwise obtained by a user terminal and/or base station as applicable. For example, such a device can be coupled to a server to facilitate the transfer of means for performing the methods described herein. Alternatively, various methods described herein can be provided via storage means (e.g., RAM, ROM, a physical storage medium such as a compact disc (CD) or floppy disk, etc.), such that a user terminal and/or base station can obtain the various methods upon coupling or providing the storage means to the device. Moreover, any other suitable technique for providing the methods and techniques described herein to a device can be utilized.

[0076] In one or more exemplary aspects, the functions described may be implemented in hardware, software, firmware, or any combination thereof. If

implemented in software, the functions may be stored on or transmitted over as one or more instructions or code on a computer-readable medium. Computer-readable media includes both computer storage media and communication media including any medium that facilitates transfer of a computer program from one place to another. A storage media may be any available media that can be accessed by a computer. By way of example, and not limitation, such computer-readable media can comprise RAM, ROM, EEPROM, CD-ROM or other optical disk storage, magnetic disk storage or other magnetic storage devices, or any other medium that can be used to carry or store desired program code in the form of instructions or data structures and that can be accessed by a computer. Also, any connection is properly termed a computer-readable medium. For example, if the software is transmitted from a website, server, or other remote source using a coaxial cable, fiber optic cable, twisted pair, digital subscriber line (DSL), or wireless technologies such as infrared, radio, and microwave, then the coaxial cable, fiber optic cable, twisted pair, DSL, or wireless technologies such as infrared, radio, and microwave are included in the definition of medium. Disk and disc, as used herein, includes compact disc (CD), laser disc, optical disc, digital versatile disc (DVD), floppy disk and blu-ray disc where disks usually reproduce data magnetically, while discs reproduce data optically with lasers. Thus, in some aspects computer readable medium may comprise non-transitory computer readable medium (e.g., tangible media). In addition, in some aspects computer readable medium may comprise transitory computer readable medium (e.g., a signal). Combinations of the above should also be included within the scope of computer-readable media.

[0077] It is to be understood that the claims are not limited to the precise configuration and components illustrated above. Various modifications, changes and variations may be made in the arrangement, operation and details of the methods and apparatus described above without departing from the scope of the claims.

[0078] The techniques provided herein may be utilized in a variety of applications. For certain aspects, the techniques presented herein may be incorporated in an access point station, an access terminal, a mobile handset, or other type of wireless device with processing logic and elements to perform the techniques provided herein.

[0079] While the foregoing is directed to aspects of the present disclosure, other and further aspects of the disclosure may be devised without departing from the basic scope thereof, and the scope thereof is determined by the claims that follow.

CLAIMS

1. An apparatus for wireless communications, comprising:

circuit configured to generate a first message comprising a field, wherein the field comprises a portion of a basic service set identifier (BSSID) if used in a single-user transmission scheme, or an indication of a number of space time streams if used in a multi-user transmission scheme; and

a transmitter configured to transmit the first message.

2. The apparatus of claim 1, wherein the portion of the BSSID comprises a plurality of least significant bits of the BSSID.

3. The apparatus of claim 1, further comprising:

a receiver configured to receive a second message comprising a field, wherein the field comprises a portion of an association identifier (AID) if the second message is transmitted utilizing a single-user transmission scheme, or an indication of number of space time streams (Nsts) if the second message is transmitted utilizing a multi-user transmission scheme.

4. The apparatus of claim 3, further comprising:

circuit configured to compare the received AID with an AID associated with the apparatus; and

circuit configured to discard the second message if the received AID is different from the AID associated with the apparatus.

5. A method for wireless communications, comprising:

generating a first message comprising a field, wherein the field comprises a portion of a basic service set identifier (BSSID) if used in a single-user transmission scheme, or an indication of a number of space time streams if used in a multi-user transmission scheme; and

transmitting the first message.

6. The method of claim 5, wherein the portion of the BSSID comprises a plurality of least significant bits of the BSSID.

7. The method of claim 5, further comprising:

receiving a second message comprising a field, wherein the field comprises a portion of an association identifier (AID) if the second message is transmitted utilizing a single-user transmission scheme, or an indication of number of space time streams (Nsts) if the second message is transmitted utilizing a multi-user transmission scheme.

8. The method of claim 7, further comprising:

comparing the received AID with an AID associated with an apparatus; and

discarding the second message if the received AID is different from the AID associated with the apparatus.

9. An apparatus for wireless communications, comprising:

means for generating a first message comprising a field, wherein the field comprises a portion of a basic service set identifier (BSSID) if used in a single-user transmission scheme, or an indication of a number of space time streams if used in a multi-user transmission scheme; and

means for transmitting the first message.

10. The apparatus of claim 9, wherein the portion of the BSSID comprises a plurality of least significant bits of the BSSID.

11. The apparatus of claim 9, further comprising:

means for receiving a second message comprising a field, wherein the field comprises a portion of an association identifier (AID) if the second message is transmitted utilizing a single-user transmission scheme, or an indication of number of space time streams (Nsts) if the second message is transmitted utilizing a multi-user transmission scheme.

12. The apparatus of claim 11, further comprising:

means for comparing the received AID with an AID associated with the apparatus; and

means for discarding the second message if the received AID is different from the AID associated with the apparatus.

13. A computer-program product for wireless communications, comprising a computer-readable medium comprising instructions executable to:

generate a first message comprising a field, wherein the field comprises a portion of a basic service set identifier (BSSID) if used in a single-user transmission scheme, or an indication of a number of space time streams if used in a multi-user transmission scheme; and

transmit the first message.

14. An access terminal, comprising:

at least one antenna;

circuit configured to generate a first message comprising a field, wherein the field comprises a portion of a basic service set identifier (BSSID) if used in a single-user transmission scheme, or an indication of a number of space time streams if used in a multi-user transmission scheme; and

a transmitter configured to transmit, via the at least one antenna, the first message.

15. An apparatus for wireless communications, comprising:

circuit configured to assign one or more association identifiers (AIDs) to one or more apparatuses, wherein the one or more AIDs are different from a portion of the basic service set identifier (BSSID) of the apparatus; and

circuit configured to notify the one or more apparatuses of the assigned AIDs.

16. The apparatus of claim 15, further comprising:

a transmitter configured to transmit a first message comprising a field, wherein the field comprises a portion of an AID if utilizing a single-user transmission scheme,

or an indication of number of space time streams (Nsts) if utilizing a multi-user transmission scheme.

17. The apparatus of claim 15, further comprising:

a receiver configured to receive a second message comprising a field, wherein the field comprises the portion of the BSSID if the second message is transmitted utilizing a single-user transmission scheme, or an indication of a number of space time streams (Nsts) if the first message is transmitted utilizing a multi-user transmission scheme.

18. The apparatus of claim 15, wherein the one or more AIDs are different from one or more BSSIDs of neighboring apparatuses.

19. The apparatus of claim 15, wherein the portion of the BSSID comprises a plurality of least significant bits of the BSSID.

20. A method for wireless communications, comprising:

assigning one or more association identifiers (AIDs) to one or more apparatuses, wherein the one or more AIDs are different from a portion of the basic service set identifier (BSSID) of an apparatus; and

notifying the one or more apparatuses of the assigned AIDs.

21. The method of claim 20, further comprising:

transmitting a first message comprising a field, wherein the field comprises a portion of an AID if utilizing a single-user transmission scheme, or an indication of number of space time streams (Nsts) if utilizing a multi-user transmission scheme.

22. The method of claim 20, further comprising:

receiving a second message comprising a field, wherein the field comprises the portion of the BSSID if the second message is transmitted utilizing a single-user transmission scheme, or an indication of a number of space time streams (Nsts) if the first message is transmitted utilizing a multi-user transmission scheme.

23. The method of claim 20, wherein the one or more AIDs are different from one or more BSSIDs of neighboring apparatuses.

24. The method of claim 20, wherein the portion of the BSSID comprises a plurality of least significant bits of the BSSID.

25. An apparatus for wireless communications, comprising:

means for assigning one or more association identifiers (AIDs) to one or more apparatuses, wherein the one or more AIDs are different from a portion of the basic service set identifier (BSSID) of an apparatus; and

means for notifying the one or more apparatuses of the assigned AIDs.

26. The apparatus of claim 25, further comprising:

means for transmitting a first message comprising a field, wherein the field comprises a portion of an AID if utilizing a single-user transmission scheme, or an indication of number of space time streams (Nsts) if utilizing a multi-user transmission scheme.

27. The apparatus of claim 25, further comprising:

means for receiving a second message comprising a field, wherein the field comprises the portion of the BSSID if the second message is transmitted utilizing a single-user transmission scheme, or an indication of a number of space time streams (Nsts) if the first message is transmitted utilizing a multi-user transmission scheme.

28. The apparatus of claim 25, wherein the one or more AIDs are different from one or more BSSIDs of neighboring apparatuses.

29. The apparatus of claim 25, wherein the portion of the BSSID comprises a plurality of least significant bits of the BSSID.

30. A computer-program product for wireless communications, comprising a computer-readable medium comprising instructions executable to:

assign one or more association identifiers (AIDs) to one or more apparatuses, wherein the one or more AIDs are different from a portion of the basic service set identifier (BSSID) of the apparatus; and

notify the one or more apparatuses of the assigned AIDs.

31. An access point, comprising:

A plurality of antennas;

circuit configured to assign one or more association identifiers (AIDs) to one or more apparatuses, wherein the one or more AIDs are different from a portion of the basic service set identifier (BSSID) of the apparatus; and

circuit configured to notify, via the plurality of antennas, the one or more apparatuses of the assigned AIDs.

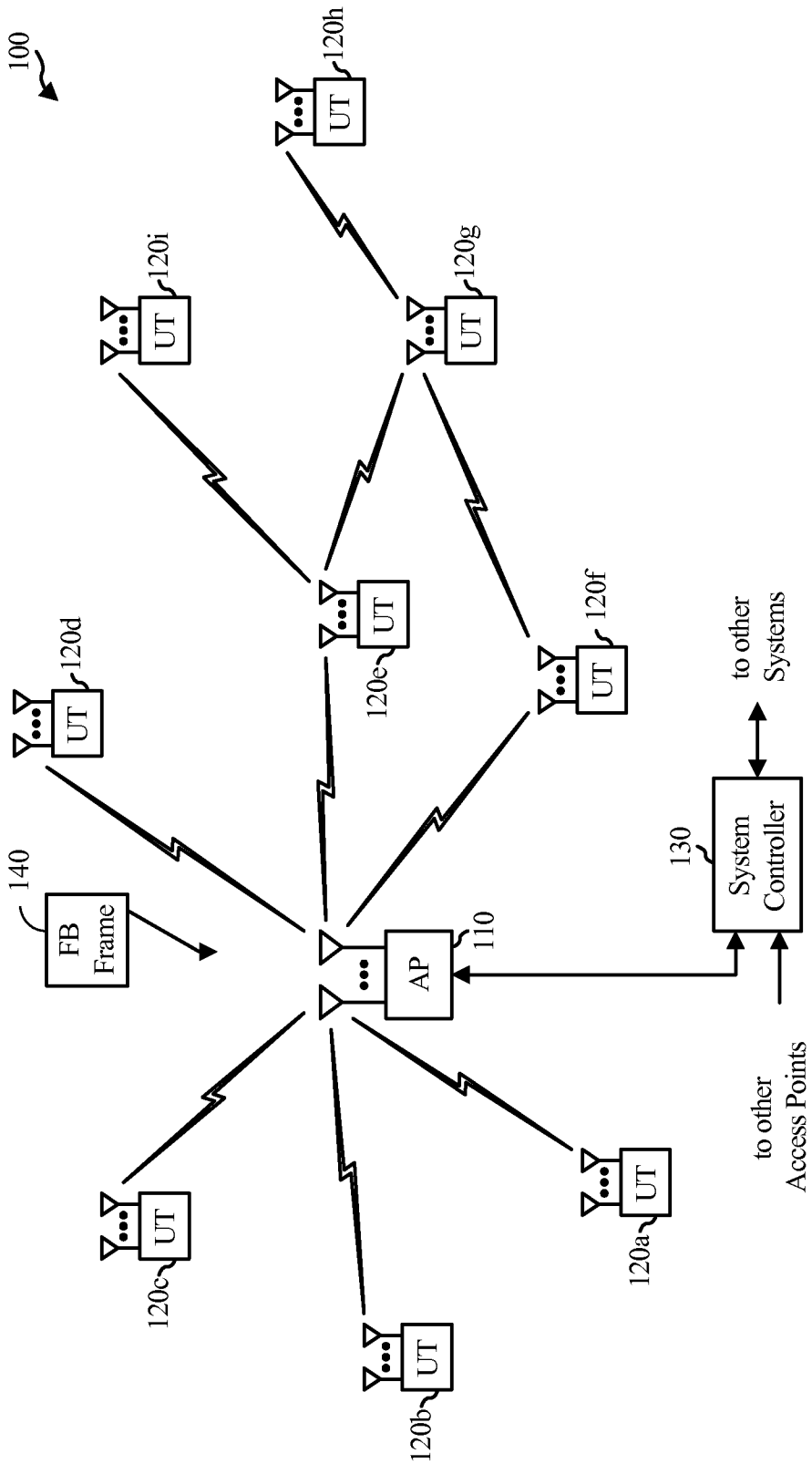
100
120h
UT
120i
UT
120g
UT
120e
UT
120d
UT
120f
UT
140
FB Frame
AP
110
130
System Controller
to other Systems
120c
UT
120b
UT
120a
UT
to other Access Points

FIG. 1

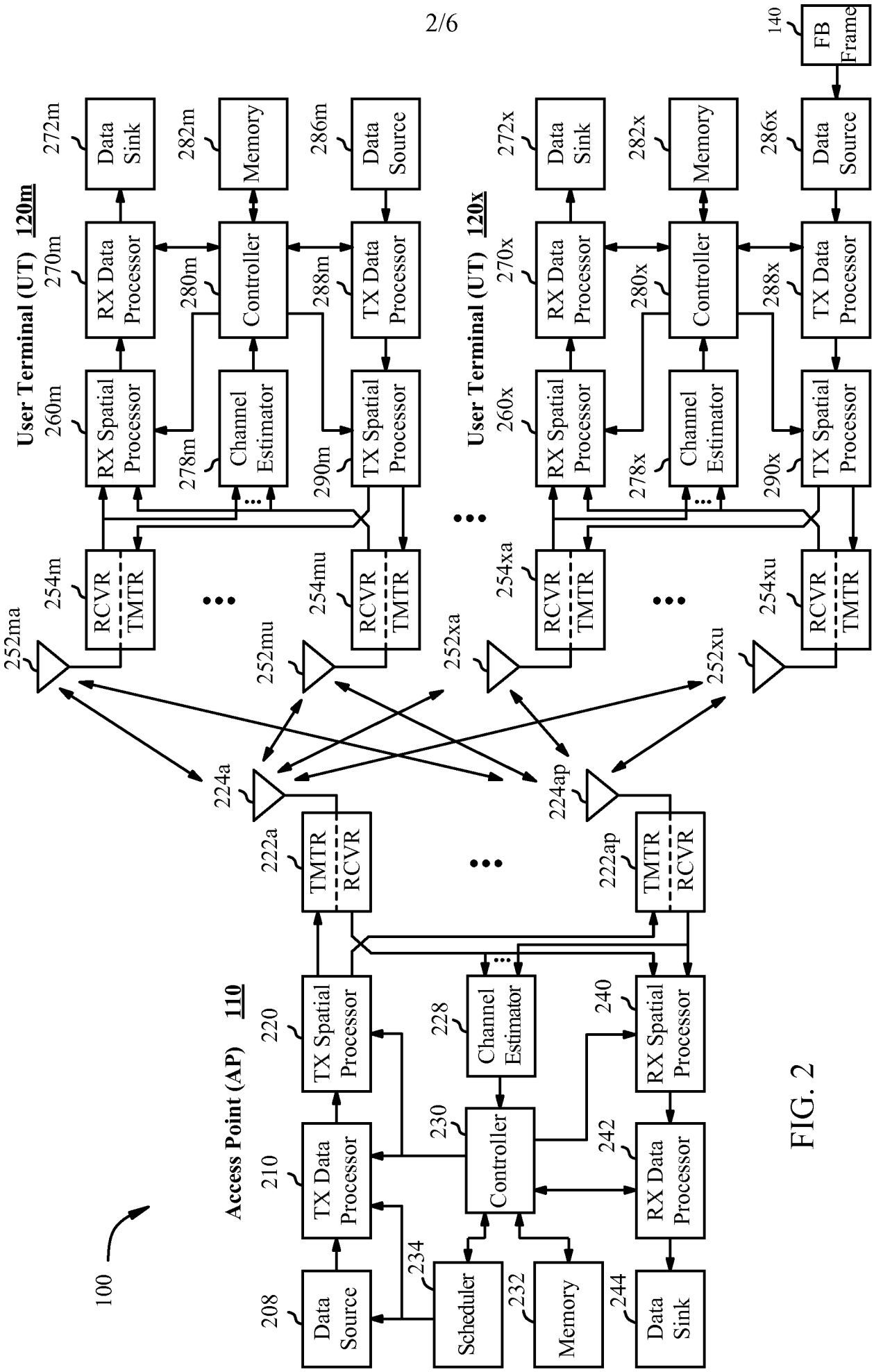
100
Access Point (AP) 110
208 Data Source
210 TX Data Processor
220 TX Spatial Processor
222a TMTR RCVR
222ap TMTR RCVR
224a
224ap
228 Channel Estimator
230 Controller
232 Memory
234 Scheduler
240 RX Spatial Processor
242 RX Data Processor
244 Data Sink
252ma
252mu
252xa
252xu
User Terminal (UT) 120m
254m RCVR TMTR
254mu RCVR TMTR
260m RX Spatial Processor
270m RX Data Processor
272m Data Sink
278m Channel Estimator
280m Controller
282m Memory
286m Data Source
288m TX Data Processor
290m TX Spatial Processor
User Terminal (UT) 120x
254xa RCVR TMTR
254xu RCVR TMTR
260x RX Spatial Processor
270x RX Data Processor
272x Data Sink
278x Channel Estimator
280x Controller
282x Memory
286x Data Source
288x TX Data Processor
290x TX Spatial Processor
140 FB Frame

FIG. 2

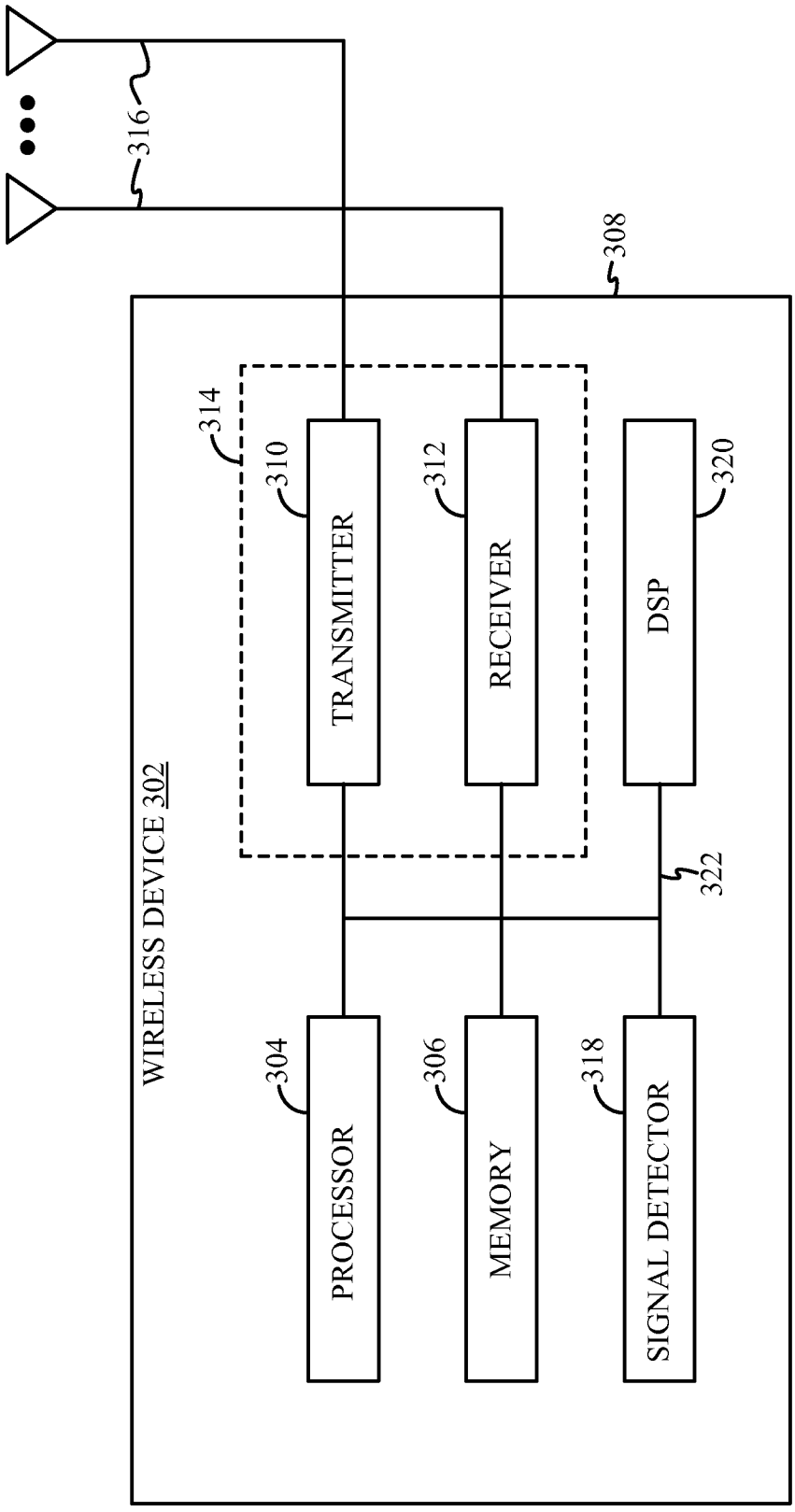
316
308
WIRELESS DEVICE 302
314
310
TRANSMITTER
312
RECEIVER
DSP
320
322
304
PROCESSOR
306
MEMORY
318
SIGNAL DETECTOR

FIG. 3

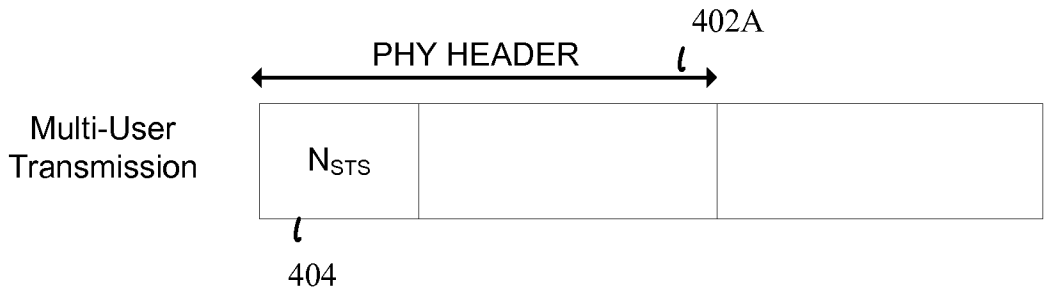

FIG. 4A

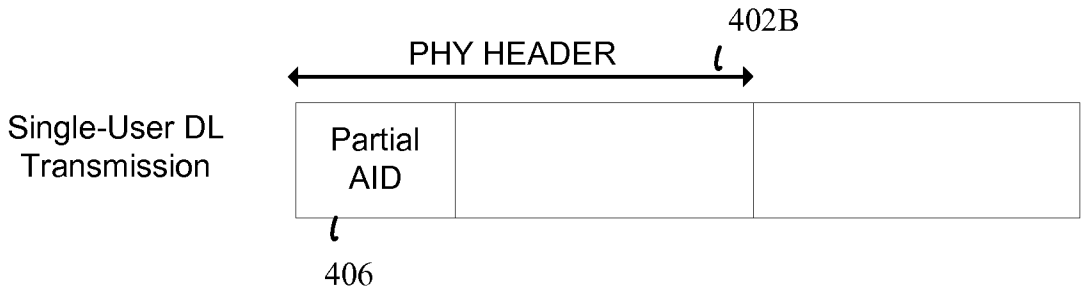

FIG. 4B

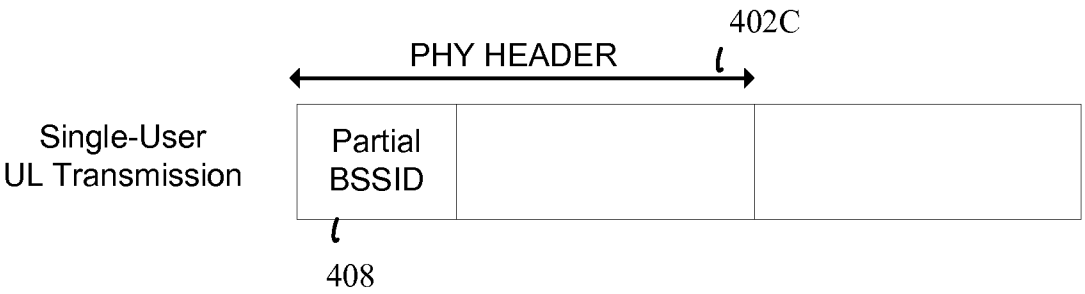

FIG. 4C

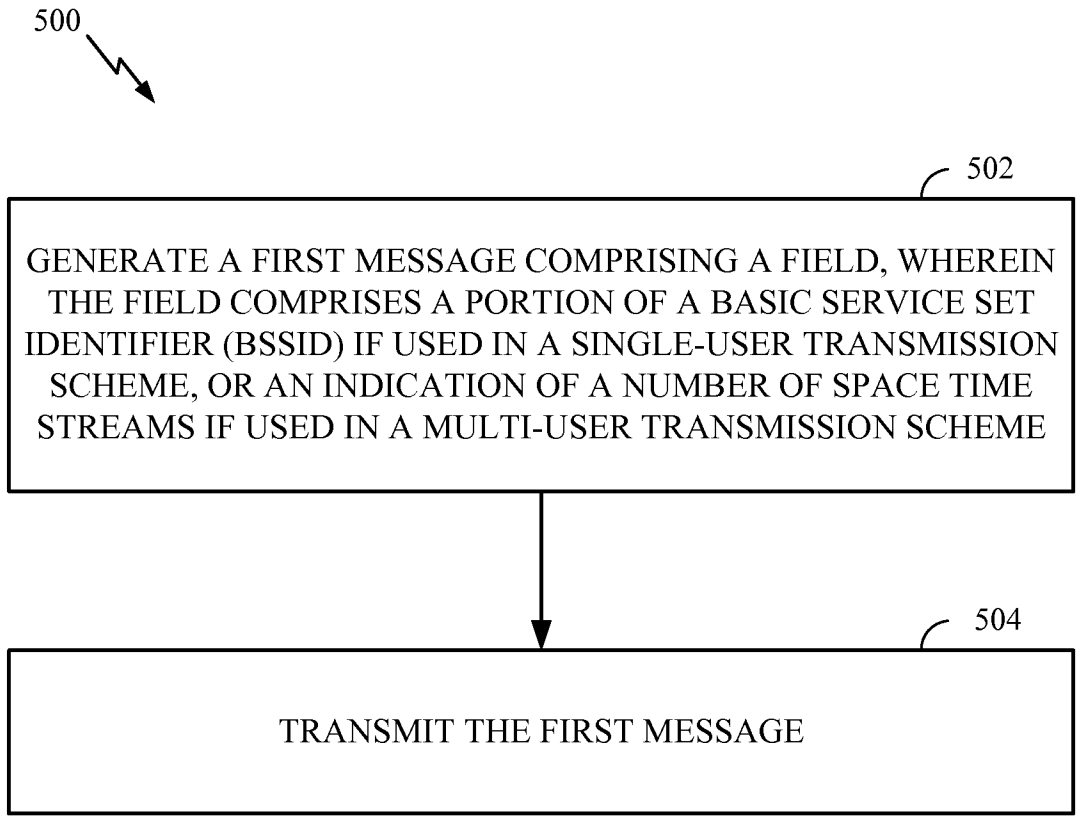
500
502
GENERATE A FIRST MESSAGE COMPRISING A FIELD, WHEREIN THE FIELD COMPRISES A PORTION OF A BASIC SERVICE SET IDENTIFIER (BSSID) IF USED IN A SINGLE-USER TRANSMISSION SCHEME, OR AN INDICATION OF A NUMBER OF SPACE TIME STREAMS IF USED IN A MULTI-USER TRANSMISSION SCHEME
504
TRANSMIT THE FIRST MESSAGE

FIG. 5

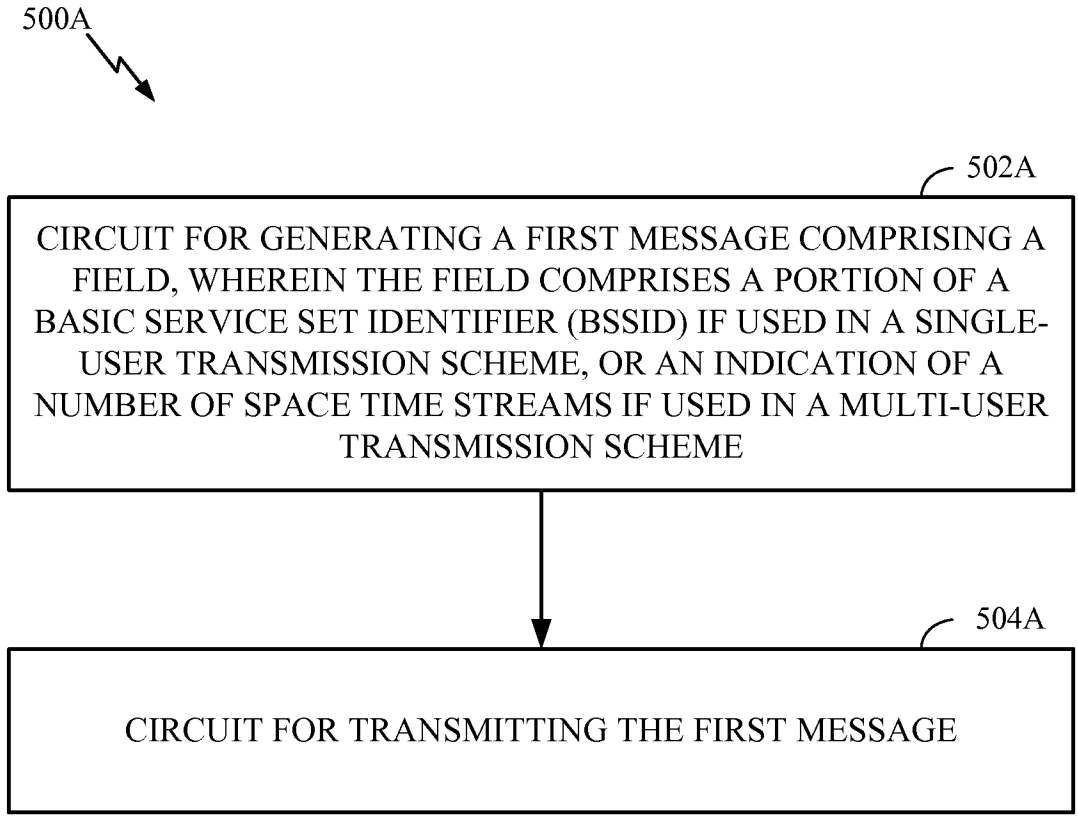
500A
502A
CIRCUIT FOR GENERATING A FIRST MESSAGE COMPRISING A FIELD, WHEREIN THE FIELD COMPRISES A PORTION OF A BASIC SERVICE SET IDENTIFIER (BSSID) IF USED IN A SINGLE-USER TRANSMISSION SCHEME, OR AN INDICATION OF A NUMBER OF SPACE TIME STREAMS IF USED IN A MULTI-USER TRANSMISSION SCHEME
504A
CIRCUIT FOR TRANSMITTING THE FIRST MESSAGE

FIG. 5A

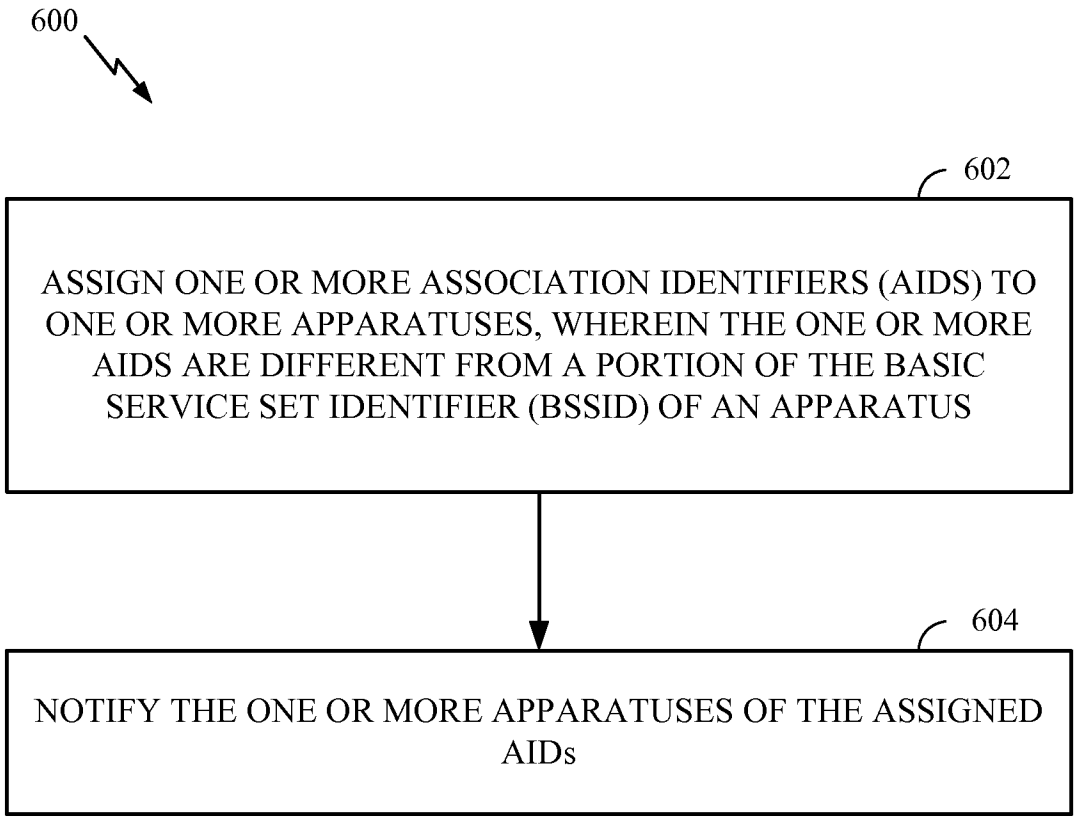
600
602
ASSIGN ONE OR MORE ASSOCIATION IDENTIFIERS (AIDS) TO ONE OR MORE APPARATUSES, WHEREIN THE ONE OR MORE AIDS ARE DIFFERENT FROM A PORTION OF THE BASIC SERVICE SET IDENTIFIER (BSSID) OF AN APPARATUS
604
NOTIFY THE ONE OR MORE APPARATUSES OF THE ASSIGNED AIDs

FIG. 6

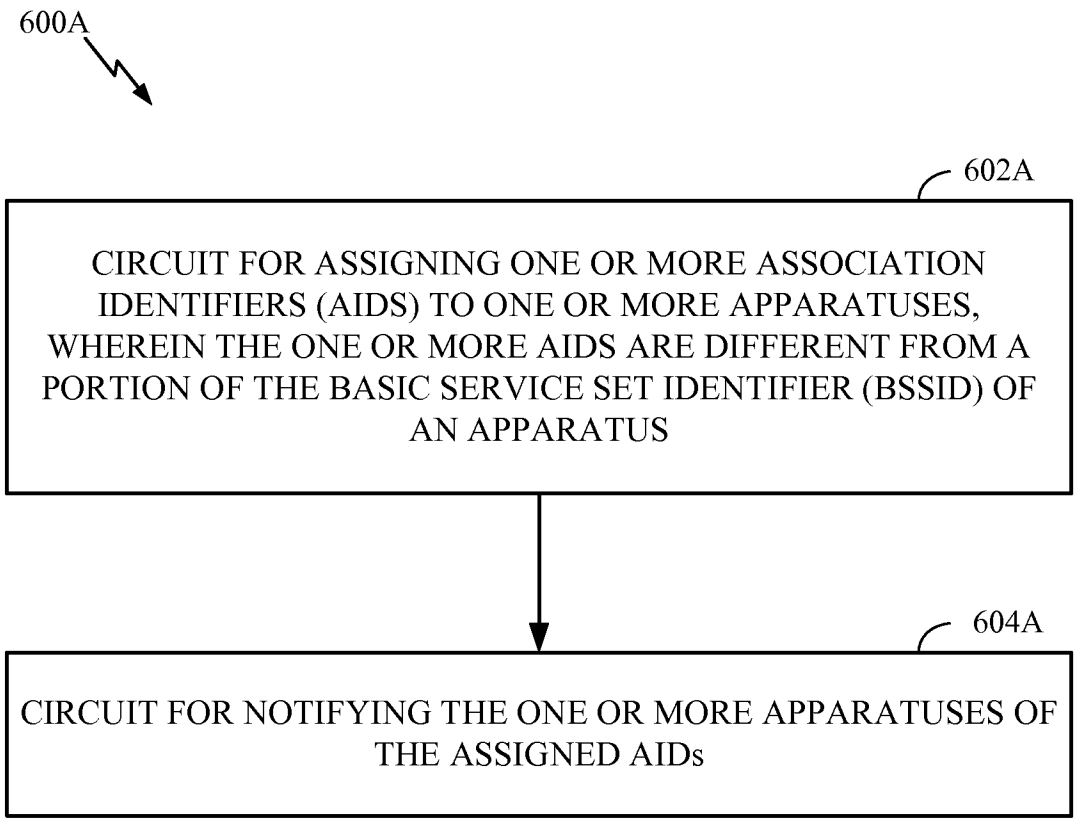
600A
602A
CIRCUIT FOR ASSIGNING ONE OR MORE ASSOCIATION IDENTIFIERS (AIDS) TO ONE OR MORE APPARATUSES, WHEREIN THE ONE OR MORE AIDS ARE DIFFERENT FROM A PORTION OF THE BASIC SERVICE SET IDENTIFIER (BSSID) OF AN APPARATUS
604A
CIRCUIT FOR NOTIFYING THE ONE OR MORE APPARATUSES OF THE ASSIGNED AIDs

FIG. 6A