Dec. 28, 1965 M. E. JOHNSON ET AL 3,226,106

ADJUSTMENT TABLES

Filed May 13, 1963 3 Sheets-Sheet 1

Fig. 1

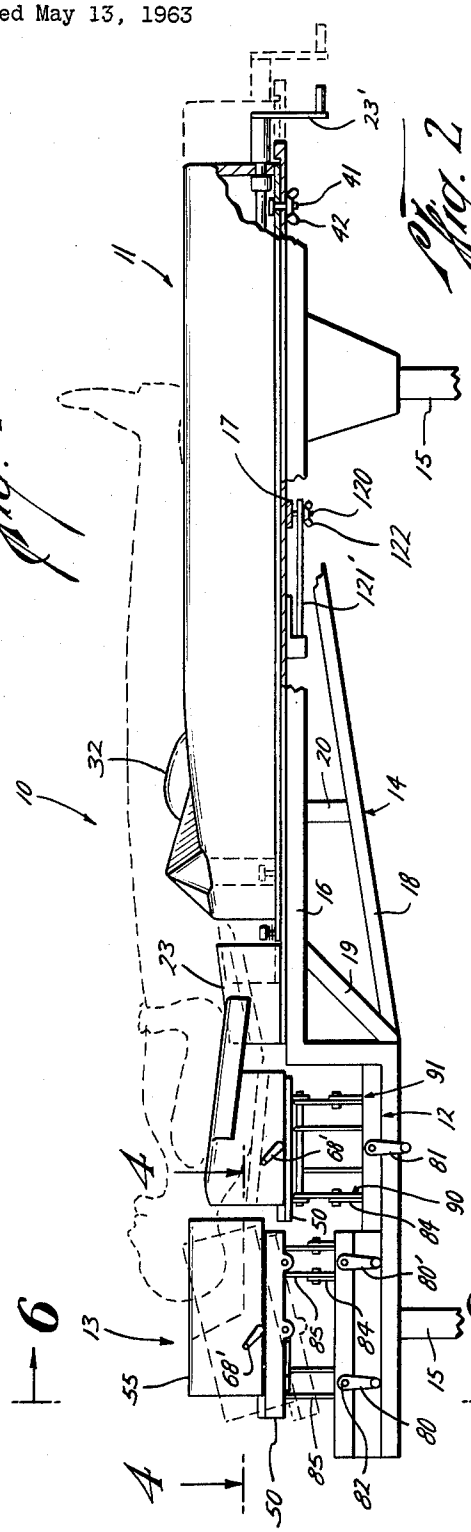

Fig. 2

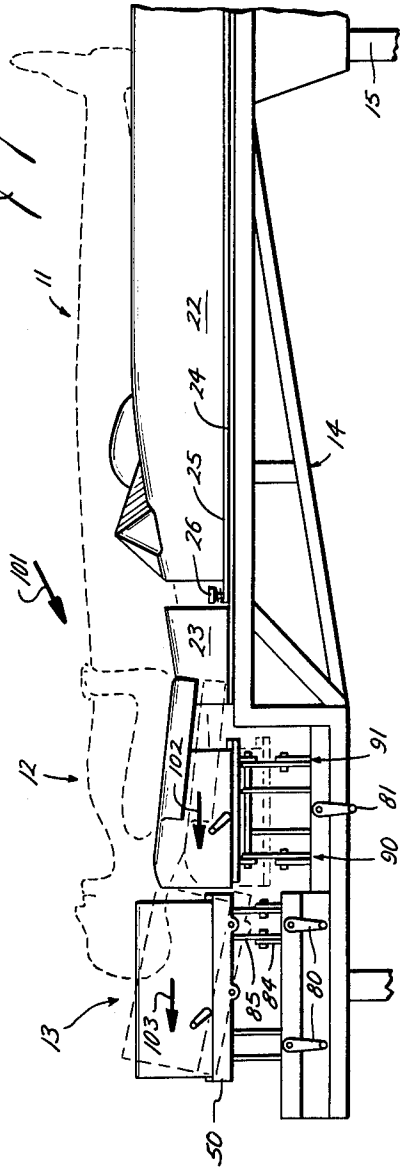

Merle E. Johnson
Edwin F. Ustynik
INVENTORS

BY Hayden & Kraus

ATTORNEYS

Dec. 28, 1965 M. E. JOHNSON ET AL 3,226,106

ADJUSTMENT TABLES

Filed May 13, 1963 3 Sheets-Sheet 2

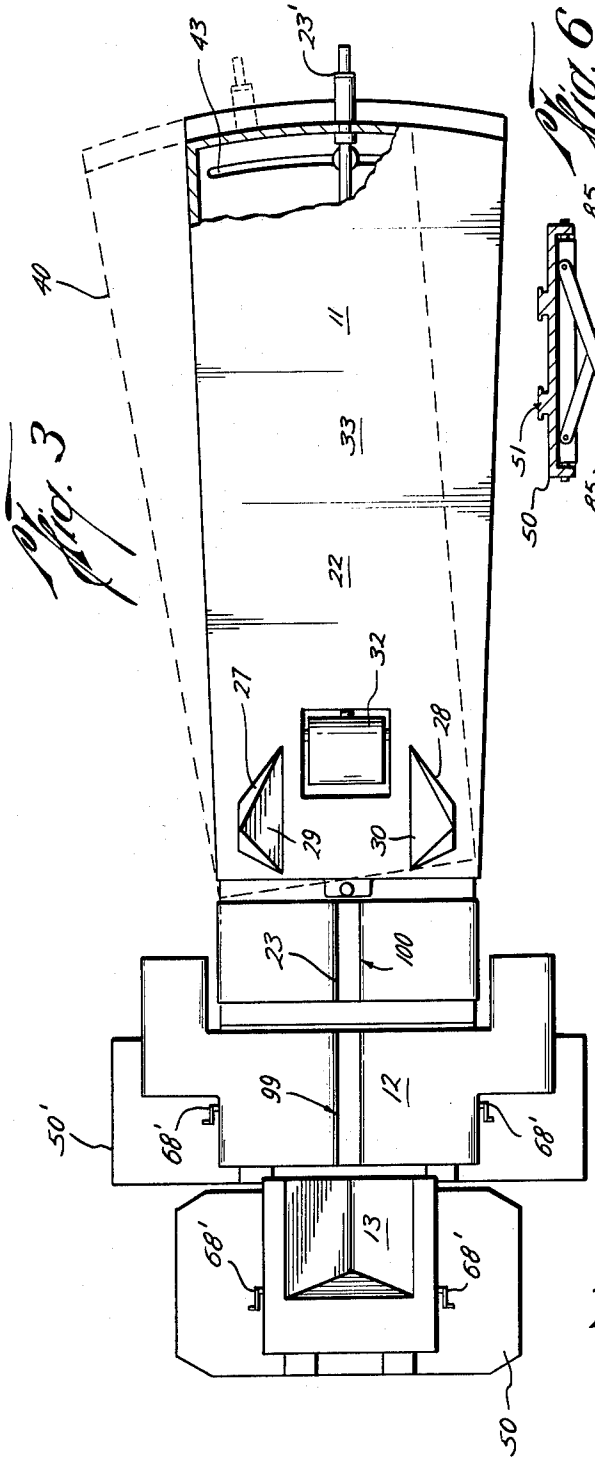

Fig. 3

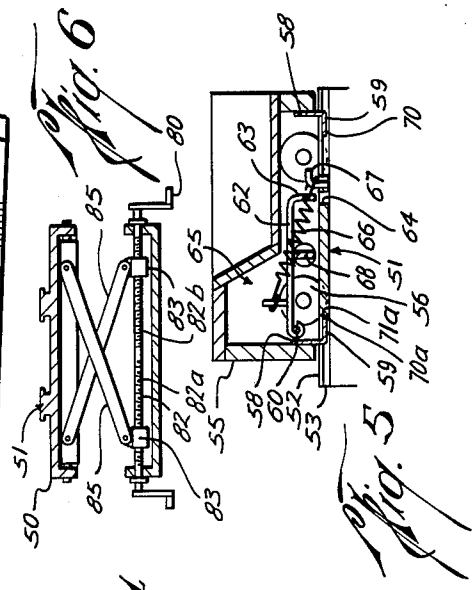

Fig. 6

Fig. 5

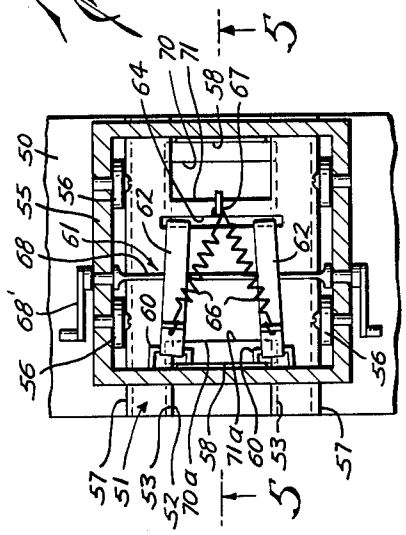

Fig. 4

Merle E. Johnson
Edwin F. Ustynik
INVENTORS

BY Hayden & Prasell

ATTORNEYS

Dec. 28, 1965 M. E. JOHNSON ET AL 3,226,106

ADJUSTMENT TABLES

Filed May 13, 1963 3 Sheets-Sheet 3

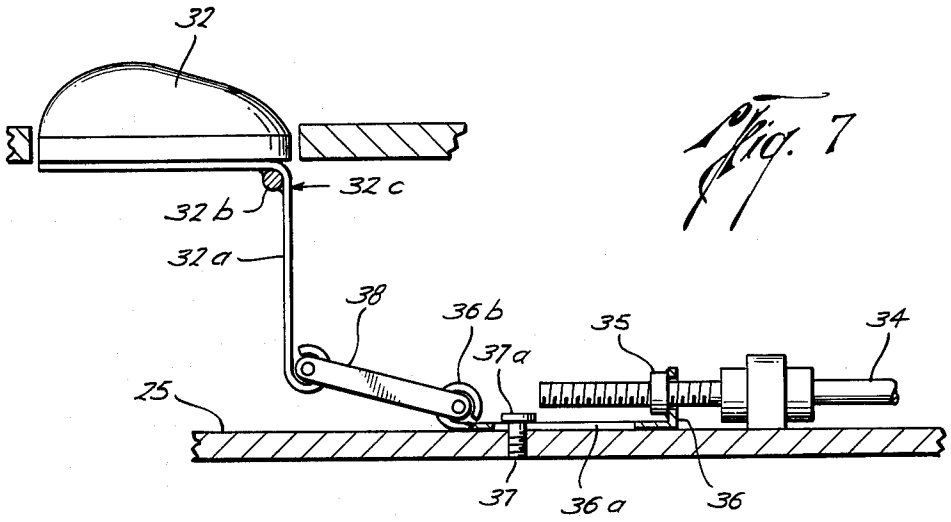

Fig. 7

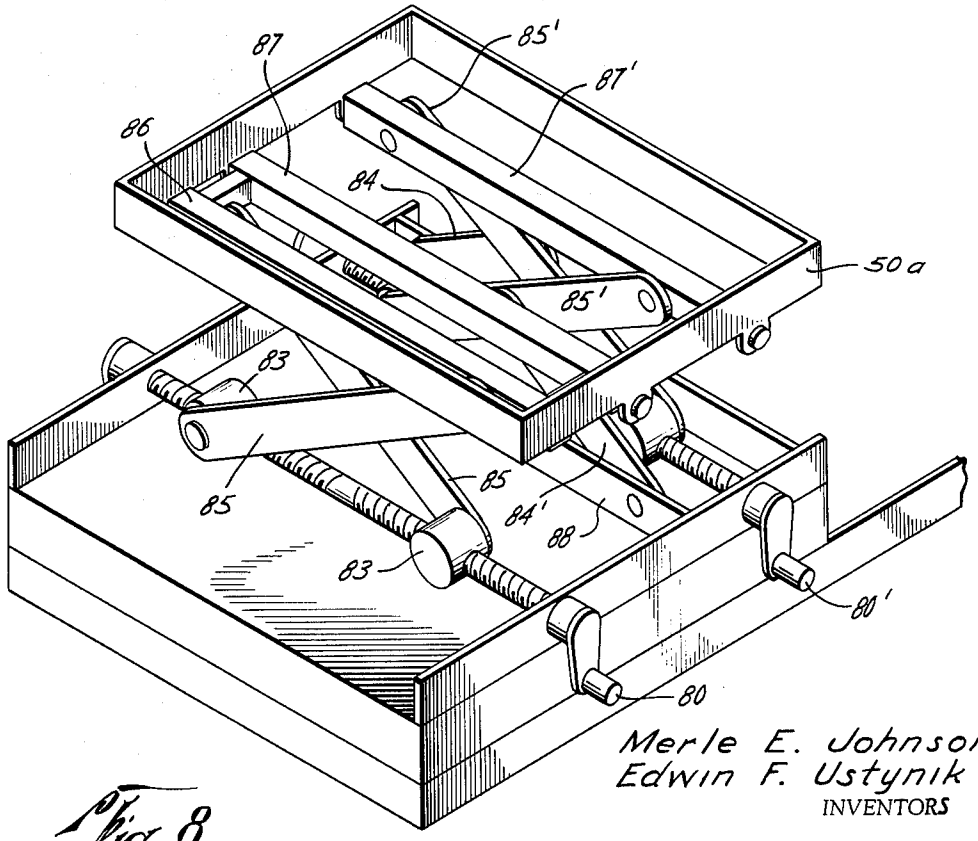

Merle E. Johnson
Edwin F. Ustynik
INVENTORS

Fig. 8

United States Patent Office 3,226,106
Patented Dec. 28, 1965

3,226,106

ADJUSTMENT TABLES

Merle E. Johnson, 1417 Carlisle, and Edwin F. Ustynik, Box 90, both of Rosenberg, Tex.

Filed May 13, 1963, Ser. No. 279,836
3 Claims. (Cl. 269—325)

The present invention relates to an improved adjustment table, and more particularly, to an adjustment table which includes portions that may move longitudinally relative to each other.

An object of the present invention is to provide a chiropractic adjustment table which is constructed and arranged so that certain portions of the table upon which the patient is supported may move longitudinally relative to other portions of the table when pressure is applied to the spinal column of the patient.

Yet a further object of the present invention is to provide a chiropractic adjustment table whereby the force applied to the spinal area of a patient may be transmitted smoothly and evenly along the vertebrae of the patient.

Still another object of the present invention is to provide a chiropractic support table which eliminates the concentration of force in limited areas or portions in the vertebrae of the patient when manual pressure is applied thereto.

Other objects and advantages of the present invention will become more readily apparent from a consideration of the following description and drawings wherein:

FIG. 1 is a side view, partly in section, showing the preferred embodiment of the present invention and illustrating in dotted line a patient resting thereon;

FIG. 2 is a partial side view somewhat similar to FIG. 1;

FIG. 3 is a top plan view of the table;

FIG. 4 is a sectional view on the line 4—4 of FIG. 1 illustrating the arrangement whereby the head and shoulder portion of the adjustment table may move longitudinally relative to the lower torso support portion;

FIG. 5 is a sectional view on the line 5—5 of FIG. 4 to illustrate further details of the invention;

FIG. 6 is a sectional view on the line 6—6 of FIG. 1 to more clearly illustrate an arrangement for raising and lowering the head support and shoulder portion independently of each other and independently of the lower torso support portion;

FIG. 7 is a side view, partly in section, of the arrangement whereby the lower torso portion of the table may be adjusted to vary the support of the lower torso; and

FIG. 8 is an isometric view illustrating the details of the head and shoulder portions of the adjustment table.

Attention is first directed to FIG. 1 of the drawings wherein the invention is represented generally by the numeral 10 and includes the lower torso support portion represented generally at 11, the shoulder support portion represented generally at 12, and the head support portion represented generally at 13. The portions may be mounted on any suitable frame as designated generally at 14, and the frame in turn supported on the legs represented at 15 to position the table at a desired vertical height.

The frame 14 may be of any suitable construction, and as shown, includes two angle iron members which extend longitudinally along each side of the frame 14, one of which side members is illustrated at 16. Suitable bracing extends between the two side angle irons, one of the lateral brace members being shown at 17. Additional support members such as 18, 19, and 20 may be provided for rigidity of the frame construction.

The lower torso portion 11 includes the elements 22 and 23 which are carried on a plate 24, the plate 24 being slidably mounted on the longitudinal side angle arms of the frame 14 in any suitable manner. The portion 22 is mounted on plate 24, and the portion 22 is supported on the plate 24 by means of its support plate 25 which in turn is connected to the plate 24 by means of the pivot pin 26, thus permitting rotation of the lower torso portion 22 in a horizontal plane and relative to the shoulder support portion 12 and head support portion 13 as will be described in greater detail hereinafter.

The lower torso portion 22 includes the raised members 27 and 28 spaced relative to each other as shown and which are provided with surfaces 29 and 30, respectively, that slope downwardly and inwardly toward the center of portion 22. Positioned between the raised portions 27 and 28 is the movable member 32 which may be raised and lowered relative to the surface 33 of the lower torso portion 22 by means of the shaft 34 which engages with a threaded coupling 35 carried on the sliding link 36 which is connected to the member 32 as more clearly seen in FIG. 7. The sliding link 36 has a cutout portion 36*a* through which a bolt 37 projects. The head 37*a* of the bolt 37 is larger than the width of the cutout portion 36*a* which secures the sliding link 36 to the support plate 25 in a manner which permits relative longitudinal motion therebetween. An eyelet 36*b* is provided for interconnection with link 38 which is connected at the opposite end with depending projection 32*a* of the bracket 32*c*. The bracket 32*c* pivots about axis 32*b* upon rotation of the shaft 34. The shaft 34 extends longitudinally of the lower torso portion 22 and is provided with a crank 23′ as shown in FIG. 1 and FIG. 3 of the drawings. When the patient reclines on the table as illustrated in dotted line in FIG. 1, the member 32 may be raised so that the lower end of the spinal column is supported on the member 32.

The lower torso portion 22 may be rotated in a horizontal plane to any desired position such as that illustrated in dotted line at 40 when the wing nut 42 on the bolt 41 has been loosened. It will be noted that arcuate slot 43 is provided in the end of the plate 24 on which the lower torso portion 22 is carried, and the bolt 41 extends through this slot as well as the plate 25. When the wing nut 42 is tightened on bolt 41, the plate 25 is locked to the plate 24, thereby preventing rotation of the plate 25, and when the wing nut 42 is loosened, the plate 25 may be moved relative to the plate 24 and frame 14.

The amount of horizontal rotation may be readily indicated by marking the extending portion of the plate 24 with properly located symbols to form a protractor.

It will be noted that the shoulder support 12 and head support or rest 13 are mounted on a portion of the frame 14 which is recessed as illustrated in FIGS. 1 and 2 to accommodate the raising mechanism for each the head and shoulder support. The details of the head support operating mechanism will be described, and the shoulder support 12 is similar thereto. Attention is directed to FIG. 4 of the drawings wherein the operating mechanism for the head support 13 is illustrated in detail. It will be noted that a support plate 50 has mounted on its upper surface a generally H-shaped member 51. The edges 52 of member 51 are undercut as illustrated by the dotted line 53 in FIG. 4 to provide the guide or runner for guiding the movable frame 55 of the head support 13 as the frame 55 is moved longitudinally of support plate 50.

The frame 55 is illustrated as being rectangular in configuration and is provided with rollers 56 on each side which ride along the outer edges 57 of the H-shaped member 51. A plate 58 secured at each end of the frame 55 is provided with a portion 59 which fits the

undercut portions or runners 53 along the edges 52 as better illustrated in FIG. 5 of the drawings, and thereby holds frame 55 on plate 50. The foregoing arrangement permits the frame 55 to be moved longitudinally of the support plate 50 and H-shaped member 51 and longitudinally relative to the shoulder support 12 and lower torso support 11 as will be described in greater detail. Suitable bracket means 60 are mounted on one end of the frame 55 as shown in FIG. 4 and mount a lock means designated generally by the numeral 61 whereby the frame 55 may be locked against longitudinal movement relative to the shoulder support 12 and lower torso support 11. The lock means 61 includes the strip portions 62 which are connected at one end in the brackets 60 and are provided with depending portions 63 at their outer end for fitting in the groove 64 of the H-shaped member for locking the frame 55 to the H-shaped member. It will be noted that the means which accommodate the relative longitudinal movement of the head support 13 is represented generally by the numeral 65 and includes the springs 66, one each being shown as mounted on the strip portions 62 and secured to the H-shaped member at their other end at 67.

The noncircular shaft 68 that extends across box frame 55 is mounted in each side of the frame 55 as shown in FIGS. 4 and 5 of the drawings and also extends beneath the strip portions 62 so that when the shaft 68 is rotated to engage the portions 62, as shown in FIG. 5, they are raised, whereupon the depending portions 63 of each disengages the opening 64. When in this position, the frame 55 may move freely longitudinally relative to the support plate 50 and H-shaped member 51 and will return to its original position since the springs 66 each tend to normally urge the frame 55 in a direction opposite to the force which is normally applied that moves the head support 12 longitudinally as will be described in greater detail. Movement of the frame 55 relative to the plate 50 and the H-shaped member 51 in one direction is limited by the edge 70 of the portion 59 of the near plate 58 abutting against the edge 71 of the H-shaped member. Movement of the frame 55 in an opposite direction is limited by contact of edge 70*a* of front plate 58 with the edge 71*a* of the H-shaped member. When 70*a* and 71*a* are in engagement, projections 63 are aligned to be received in groove 64.

The shoulder support portion 12 is similarly mounted on a plate 50′ and is provided with a frame 55 and operating mechanism similar to that described with regard to the head support 13 to accommodate longitudinal movement thereof relative to the head portion 12 and relative to the lower torso support 11.

It will be noted that the shaft 68 is provided with a crank lever 68′ for actuation thereof. The head support 13 and shoulder support 12 may be adjusted vertically as illustrated in dotted line of the drawings by means of the cranks 80 and 81, respectively. The shoulder support 12 may be adjusted vertically while remaining parallel to the horizontal, but the head support 13 may be adjusted at each end as shown in dotted line.

A suitable means for raising and lowering either end of the head support 13 or raising and lowering the shoulder support 12 is illustrated in FIGS. 6 and 8, such means operated by a reversely threaded shaft 82 which is rotated by means of the cranks 80 or 81, respectively. A scissor arrangement is disclosed in FIG. 6, wherein the shaft 82 has threaded portions 82*a* and 82*b* threadedly engaged with couplings 83. The couplings 83 are pivotally connected to the crossarms 85, and upon rotation of the shaft 82, develop longitudinal motion on said shaft which raises or lowers the arms 84 as the couplings move toward or away from each other on the shaft 82. The arms 84 are pivotally connected at their upper ends to carry the plate 50 of the head support 13 as controlled by manipulating the hand crank.

Since the plate 50 is not maintained parallel to the frame 14 at all times means are shown in FIG. 8 whereby the forward and rearward ends of the head support 13 are independently adjusted. A forward crank 80 is connected to the shaft 82 which manipulates the crossarms 85 as depicted in FIG. 8; the lower ends of the arms 85 are connected to the couplings 83 and the upper ends are pivotally connected to a spaced apart bar 86. The bar 86 is laterally secured at both ends to a pivot bar 87 which is parallel to the bar 86 and pivotally joined to the outer lip 50*a* of the plate 50. By such an arrangement the arms 85 may be raised or lowered in spite of rotation of the plate 50 relative thereto, for the bar 86 imparts the desired vertical motion to the pivot bar 87 unaffected by rotational motion of the plate 50.

The rear scissor arrangement of the head support 13 is supplied with additional crossarm supports to brace the head support 13 against all motion except that caused by manipulation of the cranks 80 and 80′. Further the bar 86 of the forward scissor arrangement is omitted, for the construction of the forward scissor arrangement adequately provides for rotation of the plate 50. Crossarms 84 and 84′ about one-half as long as the crossarms 85′ are pivotally connected to the midpoints of the arms 85′ to provide additional bracing. The crossarms 85 are connected directly to the pivot bar 87′ at their upper ends and to the couplings 83 which threadedly engage the shaft 82. The crossarm 84′ is secured at its lower end to a fixed beam 88 and the crossarm 84 is likewise attached to a fixed frame member. Upon rotation of the crank 80′, the rearward scissor arrangement raises the rear end of the head support 13 which is free to rotate about the pivot bars 87 and 87′. Similarly, the crank 81 is operated to raise and lower the shoulder support 12 by rotation of the shaft 82, which shaft is provided with an elongated coupling that engages the crossarms designated generally at 90 and 91 for operation thereof.

The torso support 11 may be shifted longitudinally of frame 14 and relative to shoulder support 12 and head support 13. To accomplish this, a bolt 120 extends down from frame brace 17, as seen in FIG. 1. A slotted projection 121′ is secured to the bottom of plate 24 and is engaged with bolt 120. The nut 122 on bolt 120 when loosened permits table 24 and torso support members 22 and 23 to be shifted longitudinally and rearwardly of frame 14. Guides (not shown) attached to the under side of the plate 24 engage the flanges of the angle iron members used to construct the frame 14 to guide the plate 24 as it moves longitudinally of the frame 14.

While it is believed that the operation is apparent from the foregoing description, to further amplify and describe, it will be assumed that a patient is on the table in the position illustrated in dotted line in FIG. 1. Crank 23′ is manipulated to raise or lower the element 32 until it engages the lower terminal end of the spine of the patient. Attention is directed to the fact that the shoulder support 12 is provided with a wide groove designated at 99, and similarly, the element 23 of the lower torso portion is grooved as indicated at 100. The element 23 is contoured so that it slopes downwardly and inwardly on each side toward the groove 100, and similarly, the shoulder support portion is contoured so that it slopes from its outer edges downwardly and inwardly towards the groove 99. Also, the head support 13 slopes downwardly and inwardly to provide a comfortable headrest for the patient.

The arrangement of the groove 99 and the sloping configuration of shoulder support 12 and torso support member 23 enables the patient to be supported on the adjustment table of the present invention in a manner so that the element 32 is the only portion of the adjust-

ment table which contacts the spine of the patient. After an X-ray of the patient's spine has been taken to determine the adjustment necessary, the portion **22** of the lower torso support area may be rotated in a horizontal plane so that when a pressure is applied manually to the pelvic area of the patient, the force will be transmitted longitudinally of the vertebrae of the spine in a manner to inhibit undue stress areas at any part of the spinal column. For example, the portion **22** of the lower torso support **11** is shown in dotted line in FIG. 3 as being rotated in a manner so as to rotate the lower pelvic area and lower spinal area of the patient in a direction counterclockwise as viewed in the drawings. This tends to initially align the vertebrae in a manner so that when manual pressure is applied by the doctor to the patient, the force applied travels longitudinally along the vertebrae in the spine.

When the force is applied to the spine of the patient, the head portion **13** and shoulder portion **12** are free to move longitudinally relative to each other and relative to the lower torso portion **11**.

Thus, when a longitudinal force is applied to the patient in the direction as represented by the arrow **101** in FIG. 2, this force is transmitted longitudinally of the spine of the patient. In order to prevent undue stress areas from forming in the spinal column of the patient, the portions **12** and **13** move longitudinally as indicated by the arrows **102** and **103** relative to the stationary lower torso support **11**, thus permitting the spinal column of the patient to be adjusted properly.

Also, it is noted that the only area of contact of the spinal column on the table is at the element **32** since the spinal column as such may be received above or in the grooves **100** and **99** of the table as shown in FIG. 3. Accordingly, when the force is applied to the pelvic area in a direction as indicated by the arrow **101**, the force is transmitted along the spinal column so that adjustment of each vertebrae and alignment thereof may be accomplished.

What is claimed is:

1. An adjustment table comprising, a portion to receive and support the lower torso of a patient, a separate portion to receive and support the shoulders and chest of a patient, a separate portion to receive and support the head of a patient, means to vertically adjust said shoulder support independently of said head and torso support, means to vertically adjust said head support independently of said shoulder and torso support, and

spring means normally holding said head and shoulder supports in predetermined longitudinal position relative to said torso support but yieldable whereby said head and shoulder supports may each move longitudinally independently of each other and relative to said torso support.

2. An adjustment table comprising, a portion to receive and support the lower torso of a patient, a separate portion to receive and support the shoulders and chest of a patient, a separate portion to receive and support the head of a patient, means to vertically adjust said shoulder support independently of said head and torso support, means to vertically adjust said head support independently of said shoulder and torso support, spring means normally holding said head and shoulder supports in predetermined longitudinal position relative to said torso support but yieldable whereby said head and shoulder supports may each move longitudinally independently of each other and relative to said torso support, and means to rotate said lower torso portion in a horizontal plane relative to said head and shoulder support portions.

3. An adjustment table comprising, a portion to receive and support the lower torso of a patient, a separate portion to receive and support the shoulders and chest of a patient, a separate portion to receive and support the head of a patient, means to vertically adjust said shoulder support independently of said head and torso support, means to vertically adjust said head support independently of said shoulder and torso support, spring means normally holding said head and shoulder supports in predetermined longitudinal position relative to said torso support but yieldable whereby said head and shoulder supports may each move longitudinally independently of each other and relative to said torso support, means to rotate said lower torso portion in a horizontal plane relative to said head and shoulder support portions, and additional means to lock said head support and shoulder support against longitudinal movement relative to said lower torso support portion.

References Cited by the Examiner

UNITED STATES PATENTS

349,089	9/1886	Gilbert	5—69
2,023,429	12/1935	Lofang	128—72
3,101,940	8/1963	Anderson	269—322

ROBERT C. RIORDON, *Primary Examiner.*