PCT

WORLD INTELLECTUAL PROPERTY ORGANIZATION
International Bureau

INTERNATIONAL APPLICATION PUBLISHED UNDER THE PATENT COOPERATION TREATY (PCT)

(51) International Patent Classification 3: B65H 19/04, 75/24

A1

(11) International Publication Number: WO 81/00558

(43) International Publication Date: 5 March 1981 (05.03.81)

(21) International Application Number: PCT/US80/01132

(22) International Filing Date: 25 August 1980 (25.08.80)

(31) Priority Application Number: 070,303

(32) Priority Date: 27 August 1979 (27.08.79)

(33) Priority Country: US

(71) Applicant; and
(72) Inventor: PAPA, Robert, B. [US/US]; 127 Midvale Drive, Cranston, RI 02920 (US).

(74) Agent: DOHERTY, Robert, J.; 11 Linden Road, Barrington, RI 02806 (US).

(81) Designated States: BR, CH, DE, GB, JP.

Published
With international search report

(54) Title: APPARATUS FOR WINDING TAPE ON CORES

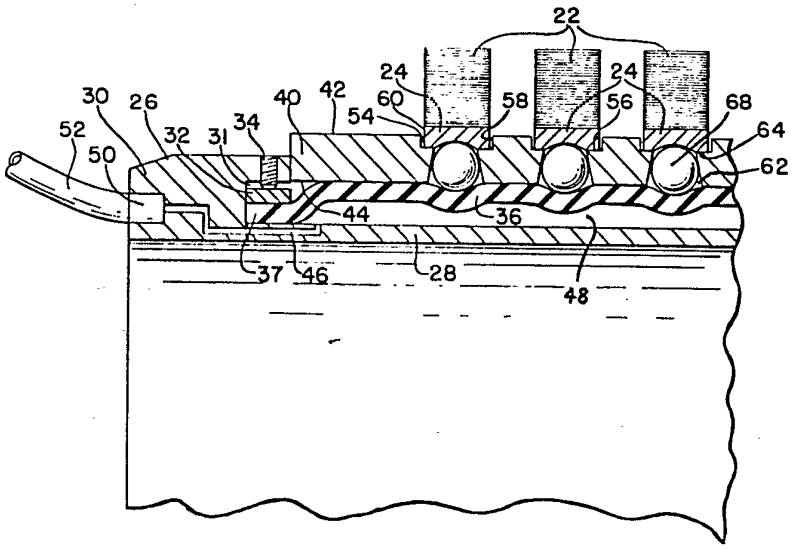

(57) Abstract

An improved apparatus for holding a plurality of cylindrical cores (24) while strip material such as tape (22) is simultaneously wound thereon. The device includes a mandrel (26) of generally overall cylindrical shape in which at least a pair of slat segments (40) are adapted to move radially outwardly and inwardly with respect to the mandrel. Each slat additionally includes a plurality of laterally circumferentially extending longitudinally spaced grooves (54) in which the cores are positioned and a groove base wall (56) having an opening (64) through which a pressure member (68) is adapted to extend so as to apply a local pressure to the interior portions of the cores. When the slats (40) are radially expanded as by the application of fluid pressure to a bladder (36), frictional holding force is applied to he cores so as to better control the winding tension of the tape strips being wound thereon.

FOR THE PURPOSES OF INFORMATION ONLY

Codes used to identify States party to the PCT on the front pages of pamphlets publishing international applications under the PCT.

AT	Austria	KP	Democratic People's Republic of Korea
AU	Australia	LI	Liechtenstein
BR	Brazil	LU	Luxembourg
CF	Central African Republic	MC	Monaco
CG	Congo	MG	Madagascar
CH	Switzerland	MW	Malawi
CM	Cameroon	NL	Netherlands
DE	Germany, Federal Republic of	NO	Norway
DK	Denmark	RO	Romania
FI	Finland	SE	Sweden
FR	France	SN	Senegal
GA	Gabon	SU	Soviet Union
GB	United Kingdom	TD	Chad
HU	Hungary	TG	Togo
JP	Japan	US	United States of America

Description

Apparatus For Winding Tape On Cores

Technical Field

This invention relates to winding strips into roll form and more particularly to an apparatus for holding a plurality of cylindrical winding cores such that strip material may be simultaneously wound thereon at a desired level or levels of tension.

It is common to convert wide rolls of resin materials such as polyolefins, polyesters and the like into multiple strips of lesser width and thereafter wind such lesser width strips into roll form. Normally a cylindrical winding core made of paper or paper-type compostion is used for this purpose. The lesser width wound rolls of strip material so formed are useful as photographic films and in the formation of pressure-sensitive adhesive tapes. Thus a web of pressure-sensitive adhesive or other material may be unwound from a wide roll, slit into multiple strips or webs of a desired lesser width and thereafter wound simultaneously into suitable lengths on individual cylindrical cores.

The cores are generally arranged in side-by-side fashion on two spaced apart mandrels whereby some of the lesser width strips of tape are wound into rolls on one mandrel and alternate strips are wound into rolls on another mandrel. These mandrels are positively driven and unless driven at a speed whereby an acceptable tension level is maintained, the resulting tape rolls can be wound either too loosely or too tightly. Either of these conditions results in tape rolls which may be unacceptable for sale, requiring either rewinding, discarding, or

BUREAU OMPI WIPO INTERNATIONAL

being sold as less than a first quality product. A common fault which results from improper tension during winding of these rolls is the coning effect often exhibited by rolls of lower-quality adhesive tape.

Backgroung Art

Various devices have accordingly been devised so as to regulate the aforementioned winding tension. For instance, in one such apparatus, the cores are positively and firmly gripped and the winding tension is controlled by regulating the driving force transmitted to the mandrel by a clutch arrangement. Although satisfactory for some purposes, such system necessitates expensive and complex equipment, and even then, unintentional slippage can occur, especially when high winding tensions are encountered during winding.

Another form of lock-core winding includes positively gripping the winding cores to the winding shafts and not allowing for any slip of differential speed to take place between the several winding cores on the same shaft or of the shaft itself. This system is advantageously simple but can only be used where differences in material thicknesses do not effect finished roll quality or where in the case of an extensible material a slight amount of material stretch may be acceptable.

It is also known to utilize various devices which permit differential core speed winding. In such systems, the cores are allowed to slip under controlled tension at a differential speed relative to the winding shaft as opposed to the lock-core winding methods. This has the desirable effect of allowing rolls supported on the same shaft to wind at different speeds relative to each other, thus compen-

BUREAU OMPI WIPO INTERNATIONAL

sating for differences in strip material thickness and in the case of extensible materials, causing the materials to stretch to a lesser degree. These systems generally include the use of longitudinally disposed cores and intermediate spacers wherein the cores are allowed to turn freely around the shaft and the spacers hold the cores in place. The spacers may be located on the shaft by a pin and the shaft is grooved to accept the pin and prevent the spacers from rotating. The amount of slip force may be adjusted by regulating the pressure of an expansible diaphragm mounted so as to apply an end thrust to the cores and spacers. An undesirable feature of such systems is that they require considerable set-up time to properly locate the cores and spacers upon the shaft.

Patents of which applicant is aware of and which represent various aspects of such above indicated known winding methods and modifications thereof include the following U. S. Patents: #3,053,467; 3,667,696; 3,853,280; 3,878,999; 3,904,144; 3,908,926; 3,945,583; 4,026,488.

Disclosure of Invention

In accordance with the present invention a novel apparatus is provided. Such apparatus includes a mandrel of generally overall cylindrical shape having at least two circumferentially spaced longitudinally extending surface openings provided therein. Slat segments having an outer arcuate surface generally corresponding to that of the mandrel are positioned in each of the openings and are radially expansible with respect thereto. Each of the slats includes a plurality of lateral circumferential grooves in which the cores are adapted to rest and a localized

BUREAU OMPI WIPO INTERNATIONAL

pressure member adapted to extend at least partially through an opening formed in the base wall of such grooves. Upon expansion, both the slats and the local pressure members are forced radially outward so as to frictionally engage the inner surface portions of the cylindrical winding cores and thus accomplish the desired degree of winding tension. Such an apparatus accordingly enables a plurality of winding cores may be supported during the winding of tape thereon in such a manner that a variable but uniform frictional holding force may be applied thereto in an uncomplicated and trouble-free manner.

Brief Description of the Drawings

The details of the invention will be described in connection with the accompanying drawings, in which Figure 1 is a schematic illustration of apparatus for slitting a web material into a plurality of lesser width strips and winding such strips simultaneously into rolls upon a plurality of cylindrical cores; Figure 2 is a plan view ~~showing~~ the narrow strips of Figure 1 being wound into individual rolls upon the apparatus of the present invention; Figure 3 is an elevational view in section illustrating portions of the present apparatus; Figure 4 is a cross-sectional end view taken along the line 4-4 of Figure 3; and Figure 5 is an enlarged partial sectional portion of Figure 3, showing the device of the present invention in its expanded core-gripping position.

Best Mode for Carrying Out the Invention

Turing now to the drawings and in particular Figures 1 and 2 thereof, a sheet or web 10 of pressure-sensitive adhesive material is shown being unwound from a supply roll 12 thereof. The supply roll

BUREAU OMPI WIPO INTERNATIONAL

12 is supported for rotation on an unwind shaft 14 for rotation in the direction shown by the arrow. The sheet material then passes through a pair of drive rolls 16 and thence through a pair of slitting rolls 18 wherein it is slit into a plurality of adjacent strips 20 and 22 which are thereafter respectively wound upon a plurality of cylindrical cores 24 positioned upon winding mandrels 26 constructed in accordance with the present invention. In this regard it should be understood that the strips 20 and 22 are adjacent to each other in the unslit sheet or web 10 and that accordingly alternate adjacent slit strips of the desired lesser width pass to alternate mandrels 26, each constructed in accordance with the present invention. Obviously more than two such mandrels may be utilized. Also, the cores utilized to wind the strips 20 or 22 on the outer surface thereof may be of any construction, but generally are formed of heavy paper and cut to the desired width from cylindrical tubes thereof.

Turning now to Figure 3 through 5 of the drawings, the construction of the winding mandrel 26 of the present invention is best shown. The mandrel includes an inner generally cylindrical shell 28 and an outer also generally cylindrical shell 30. Both shells are adapted to cooperate with each other and are positioned with regard to each other in the desired fashion by means of a plurality of bolts or screws (not shown). In this regard the outer shell 30 includes an inner radially outwardly extending recess or chamber 31 in which the respective outer ends of the inner shell 28 are adapted to be positioned. In addition, a ring 32 is disposed in each such chamber and is adapted to be moved towards and away from the upper surfaces of the inner shell 28 by means of a

BUREAU OMPI WIPO INTERNATIONAL

screw member 34. A generally cylindrical shaped bladder 36 formed from any suitable elastomeric material such as rubber and the like is disposed about the inner shell 28 and includes end portions 37 thereof positioned beneath the ring 32. In this manner then, the end portions 37 of the bladder 36 may be positively gripped between the ring and inner shell for a purpose which will hereinafter be more clearly understood.

The central portions of the outer shell 30 are provided with at least two opposed longitudinally extending openings 38. Three of four openings are normally provided. A longitudinally oriented slat 40 is adapted to extend into each such opening 38 and is radially movable in regard thereto, that is, the slats may move from a first position shown in Figure 3 to a second or expanded position illustrated by Figure 5. In the normal or unexpanded position of the slats 40, the arcuate outer surface 42 thereof generally is flush with or form a continuation of the cylindrical surface of the outer shell 30. Also, the bottom surface 44 of the slats 40 is adapted to contact the upper surface portions of the bladder 36 such that upon expansion of the bladder as by the admission of air pressure thereto, the slats 40 move to such aforementioned radially outwardly expanded position. Such air pressure may be admitted beneath bladder 36, that is, between the bladder and the outer surface of the inner shell 28 by means of an air line 46 passing through one end of the outer shell 30 and opening into a chamber 48 formed between the bladder 36 and the inner shell 28. A valve 50 connected to a suitable source of compressed air, as through hose 52, may complete the means through which the bladder may be expanded. Similarly, when

BUREAU OMPI WIPO INTERNATIONAL

the air pressure in the chamber 48 is reduced or eliminated, the force and accordingly the tendency for the slats 40 to radially expand will be reduced or eliminated.

Each of the slats further includes a plurality of longitudinally spaced circumferentially extending grooves 54. Each such groove includes a base wall 56 and opposed side walls 58. The cores 24 are adapted to be mounted in the grooves 54 such that the edges 60 thereof are adapted to engage the groove side walls 58 or at least be positioned with regard thereto so as to prevent any significant back-and-forth movement of cores with respect to the slat. Additionally, each groove 54 includes a generally frustro-conical chamber 62 positioned beneath the base wall thereof and terminating in a circular opening 64 in such base wall 56. A metal ball 68 is disposed in each such chamber 62 and is adapted to engage the upper surface of the bladder at lower portions thereof and side surfaces of the chamber 62 at upper portions thereof. The diameter of the ball 68 is also such that at least portions thereof are also adapted to extend through the opening 64 in the expanded condition of the bladder 36 so as to apply localized pressure on inner surface portions of the core 24 mounted in such groove 56.

In order that the slats 40 will not move outwardly from the openings 38, adjacent positions of the outer shell 30 are provided with projections of ledges 70 which extend circumferentially from each longitudinal edge of the openings 38 thereof. Also the slats include similar projections or ledges 72 provided on their longitudinal edges. The ledges 72 are disposed at the inner radical surface of the slats while the ledges 70 are disposed at the outer radial

BUREAU OMPI WIPO INTERNATIONAL

surface of the outer shell 30, that is, the openings 38 thereof. In this manner and as best shown in Figure 4, the ledges 72 are adapted to contact ledges 70 and thus the slats 40 are restrained from moving outwardly relative to the mandrel more than the degree to facilitate the desired slat expansion.

While there is shown and described herein certain specific structure embodying the invention, it will be manifest to those skilled in the art that various modifications and rearrangements of the parts may be made without departing from the spirit and scope of the underlying inventive concept and that the same is not limited to the particular forms herein shown and described except insofar as indicated by the scope of the appended claims.

BUREAU OMPI WIPO INTERNATIONAL

Claims

1. Apparatus for holding a plurality of cylindrical winding cores while strip material is simultaneously wound thereon comprising, a mandrel of generally overall cylindrical shape having at least two circumferentially spaced longitudinally extending openings provided therein, a slat segment having an outer arcuate surface generally corresponding to that of said mandrel positioned in each said opening, each said slat including a plurality of longitudinally spaced grooves laterally extending across the outer surface thereof, said cores adapted for disposition over said mandrel and at least partially into said grooves and wherein the core side walls are adapted to contact sidewalls of said grooves, each said groove including a base wall having at least one opening through which a member adapted to apply local pressure to inner surface portions of said cores is adapted to radially extend, expansible means disposed in said mandrel and adapted to simultaneously contact inner surface portions of both said slats and said local pressure members whereupon expansion of said expansible means causes both said slat groove base walls and said local pressure members to be forced into frictional contacts with said cores such that the holding force applied to said cores may be varied dependent on the force applied to said expansible means.

2. The apparatus of Claims 1 or 4, said expansible means being an air expansible bladder, and valve

BUREAU OMPI WIPO INTERNATIONAL

means for enabling pressurized air to move into and out of said bladder.

3. The apparatus of Claim 2, said bladder of bag type cylindrical construction, said mandrel having an inner shell and an outer shell, end portions of said bladder adapted to extend between said inner and outer shells at opposite ends of said mandrel.

4. The apparatus of Claim 1, said local pressure member being a ball adapted to extend partially through said slat groove base wall opening into contact with the respective core positioned on said groove.

5. The apparatus of Claim 4, said slats including a frustro-conically shaped chamber for receipt of said balls, said chambers terminating at their upper ends in said base wall opening.

BUREAU OMPI WIPO INTERNATIONAL

FIG. 1

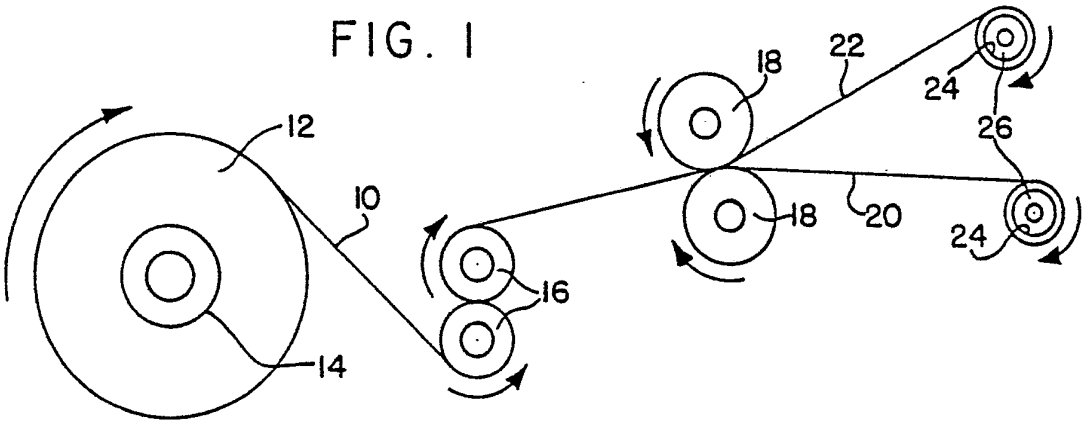

FIG. 2

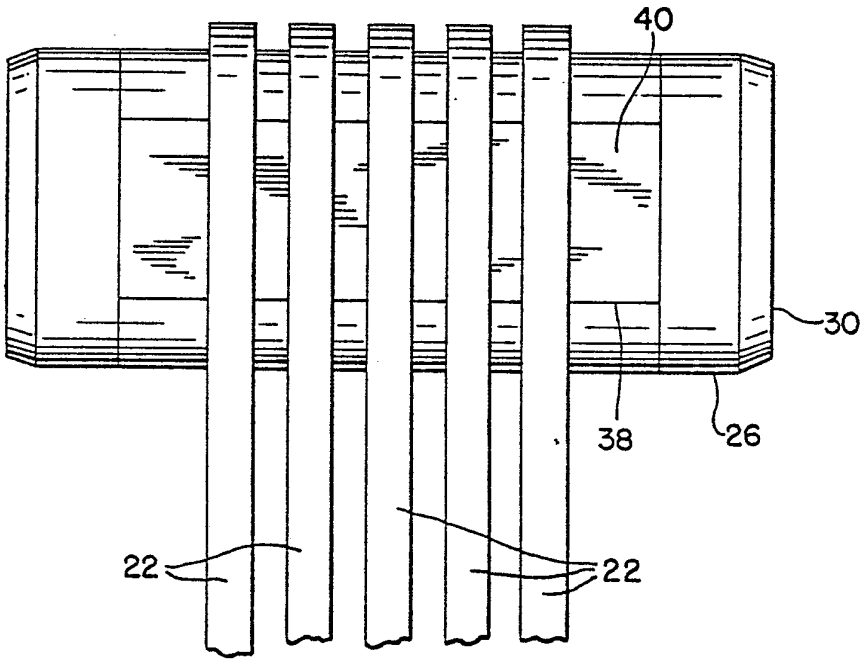

FIG. 3

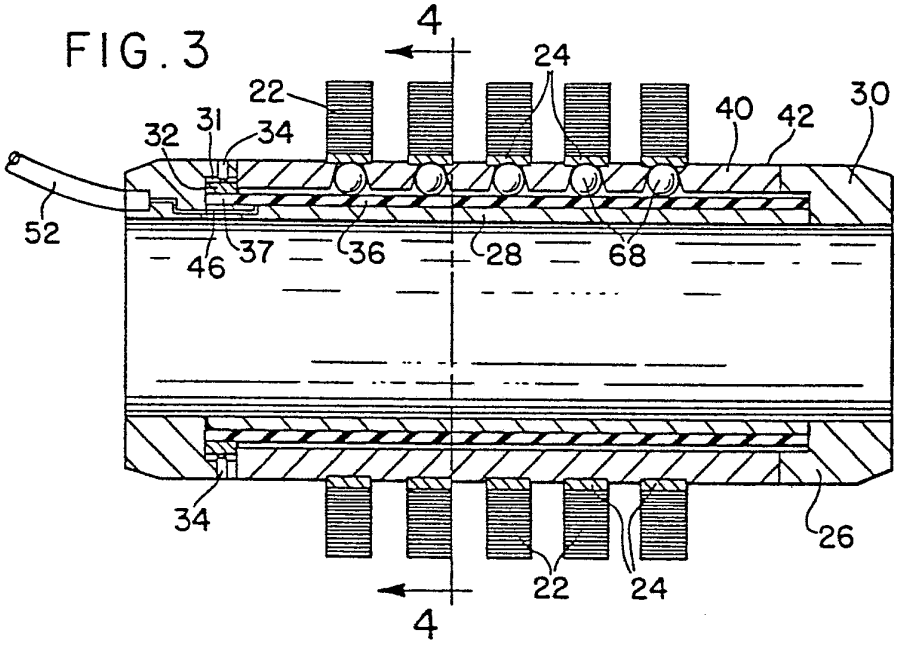

BUREAU
OMPI
WIPO
INTERNATIONAL

FIG. 4

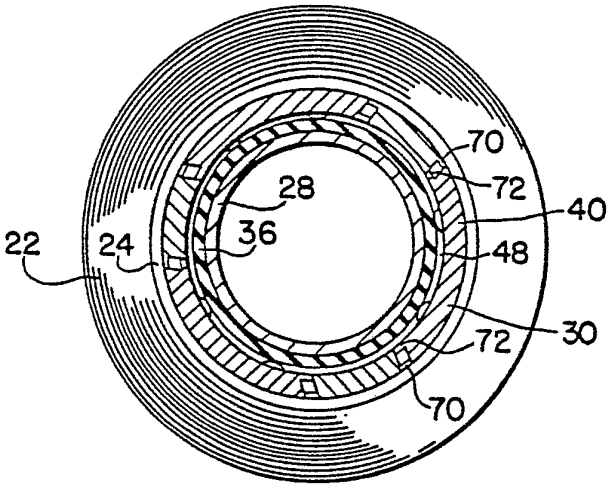

FIG. 5

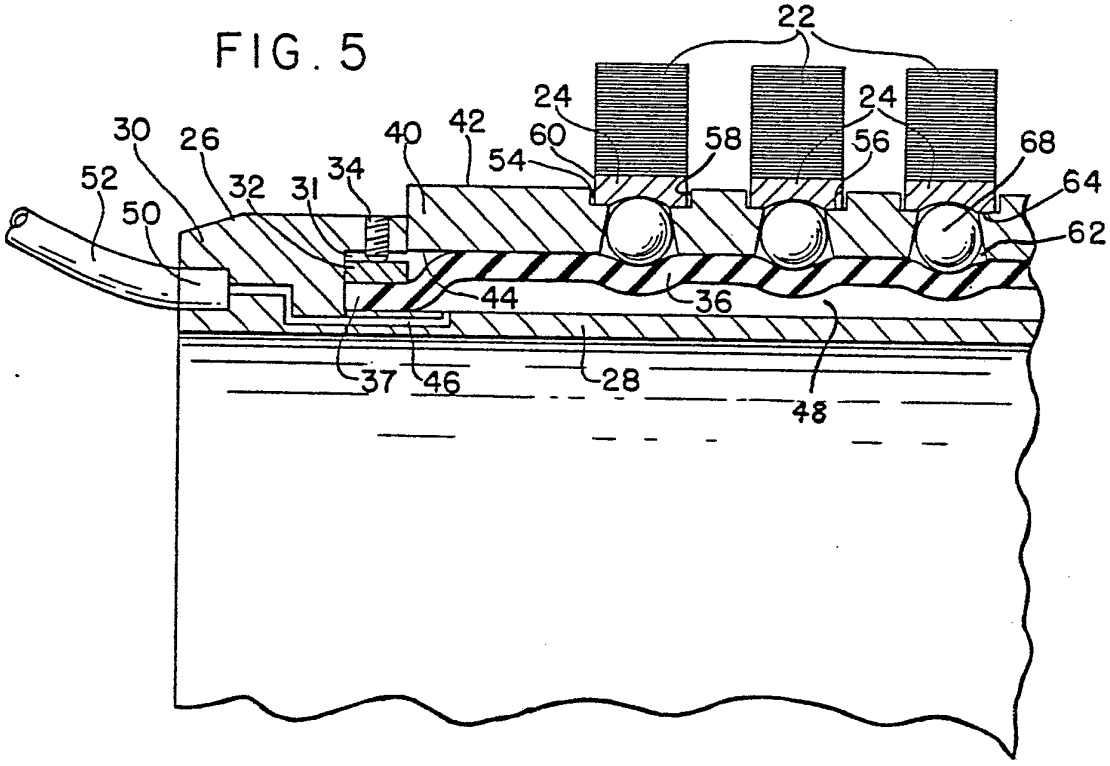

BUREAU
OMPI
WIPO
INTERNATIONAL

INTERNATIONAL SEARCH REPORT

International Application No PCT/US80/01132

I. CLASSIFICATION OF SUBJECT MATTER (if several classification symbols apply, indicate all) [3]

According to International Patent Classification (IPC) or to both National Classification and IPC

INT. CL[3] B 65H 19/04, B65H 75/24
U.S. CL. 242/56.9

II. FIELDS SEARCHED

Minimum Documentation Searched [4]

Classification System	Classification Symbols
U.S.	242-56.3,56.9,68,68.2,68.3,68.4,72,72B

Documentation Searched other than Minimum Documentation to the Extent that such Documents are Included in the Fields Searched [5]

III. DOCUMENTS CONSIDERED TO BE RELEVANT [14]

Category *	Citation of Document, [16] with indication, where appropriate, of the relevant passages [17]	Relevant to Claim No. [18]
A	US, A, 3,552,672 Published 5 January 1971 Grettve	
A	US, A, 3,853,280 Published 10 December 1974 Pennisi	
A	US, A, 3,878,999 Published 22 April 1975 Daves	
A	US, A, 4,026,488 Published 31 May 1977 Hoshimoto	
A	US, A, 4,026,491 Published 31 May 1977 Bostvoem	

* Special categories of cited documents: [15]

"A" document defining the general state of the art

"E" earlier document but published on or after the international filing date

"L" document cited for special reason other than those referred to in the other categories

"O" document referring to an oral disclosure, use, exhibition or other means

"P" document published prior to the international filing date but on or after the priority date claimed

"T" later document published on or after the international filing date or priority date and not in conflict with the application, but cited to understand the principle or theory underlying the invention

"X" document of particular relevance

IV. CERTIFICATION

Date of the Actual Completion of the International Search [2]: 28 October 1980

Date of Mailing of this International Search Report [2]: 11 DEC 1980

International Searching Authority [1]: ISA/US

Signature of Authorized Officer [20]: Edward J. McCarthy