No. 763,613. PATENTED JUNE 28, 1904.

T. F. KEATING.

AUTOMATIC SIGNAL.

APPLICATION FILED JAN. 14, 1903.

NO MODEL. 2 SHEETS—SHEET 1.

Fig. 1.

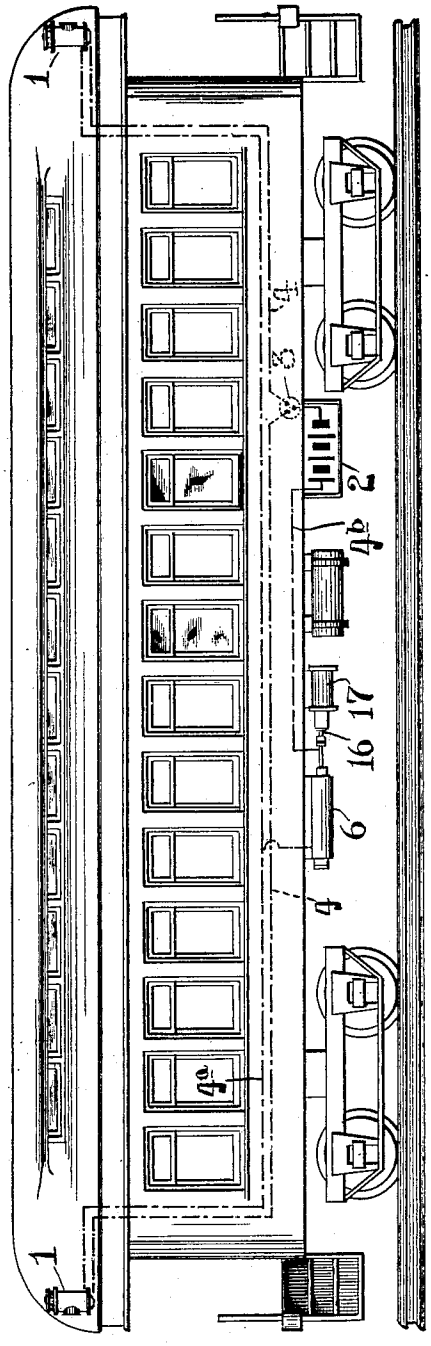

Fig. 2.

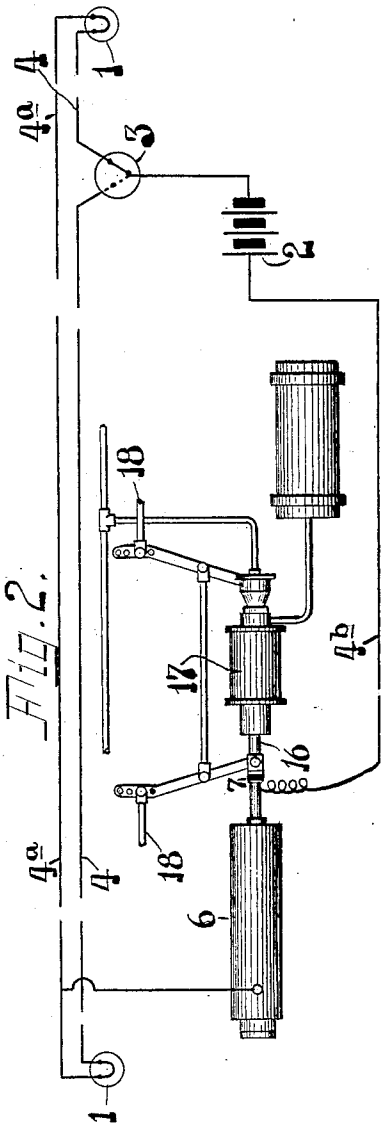

WITNESSES

Geo. H. Harvey.

R. B. Wakefield

INVENTOR

Thomas F. Keating,

By his Attorney

Chudlow Livingston

THE NORRIS PETERS CO., PHOTO-LITHO., WASHINGTON, D. C.

No. 763,613. PATENTED JUNE 28, 1904.

T. F. KEATING.

AUTOMATIC SIGNAL.

APPLICATION FILED JAN. 14, 1903.

NO MODEL. 2 SHEETS—SHEET 2.

Fig. 3.

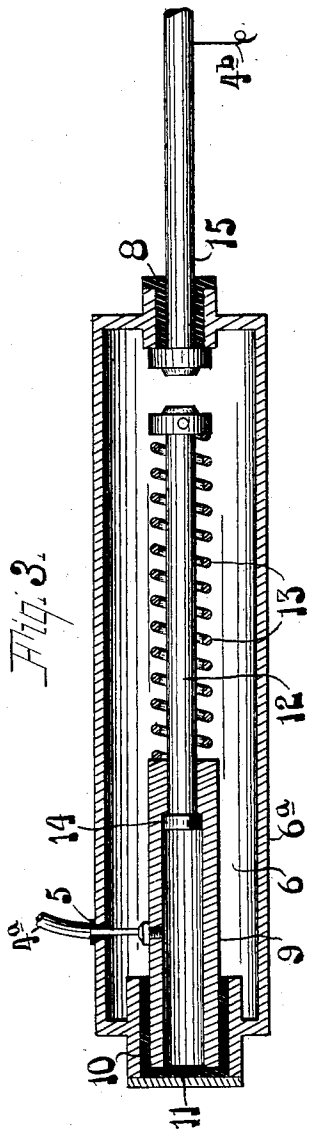

Fig. 4.

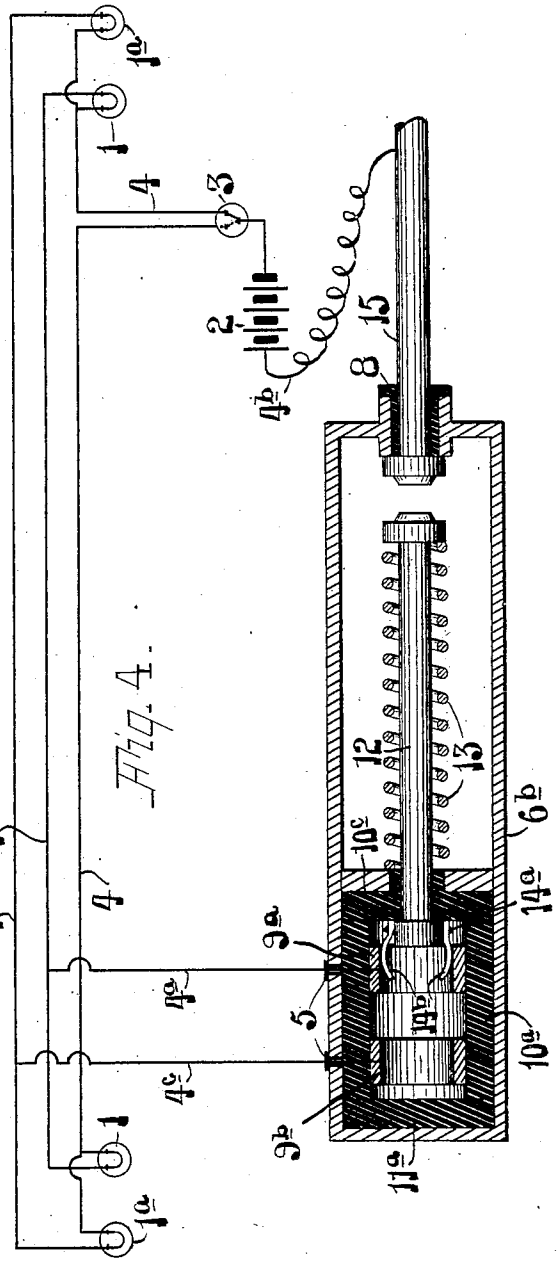

WITNESSES:

Geo. H. Harvey.

[illegible] Wakefield

INVENTOR,

Thomas F. Keating,

by his Attorney

C. Ludlow Livingston

THE NORRIS PETERS CO., PHOTO-LITHO., WASHINGTON, D. C.

No. 763,613. Patented June 28, 1904.

UNITED STATES PATENT OFFICE.

THOMAS F. KEATING, OF NEW YORK, N. Y.

AUTOMATIC SIGNAL.

SPECIFICATION forming part of Letters Patent No. 763,613, dated June 28, 1904.

Application filed January 14, 1903. Serial No. 138,995. (No model.)

To all whom it may concern:

Be it known that I, THOMAS F. KEATING, a citizen of the United States of America, and a resident of the city, county, and State of New York, have invented certain new and useful Improvements in Automatic Signals, of which the following is a specification.

My invention relates to automatic signals for railway-cars, the object being to provide signals for the rear end of a car or train of cars which shall be capable of automatically informing the motorman or engineer, as the case may be, of a following car or train of cars immediately of the fact when the brakes of the preceding train have been applied or when the speed from any cause has fallen below the predetermined rate.

My invention consists in locating a visual signal at the rear end of a car and in providing means for actuating said signal, which means are controlled by the application of the brakes.

My invention is especially applicable to instances where trains are run at frequent intervals and at high speeds, especially at night or in tunnels, and by means of my invention trains may be run at much shorter intervals with safety than has been possible heretofore, for it is obvious that if the engineer of a train following another is immediately informed of the first application of the brakes or the first diminution of speed below a certain predetermined limit he can with safety approach that train more closely when both are running at full speed than he otherwise could.

In the particular application of my invention herein described the visual signal consists of an electric lamp or lamps suitably placed at the rear of a car. These electric lamps are in circuits to which an electric current may be supplied from any convenient source. When the train is moving at full speed and the brakes are released, the circuit or circuits are opened and the electric signal does not show. When, however, the brakes are applied, the circuit is closed and the signal shows and continues to show until the brakes have been released and the speed of the train has again reached the predetermined limit.

In the drawings accompanying and forming part of this specification, Figure 1 represents a side view of the rear car of a train supplied with my invention. Fig. 2 represents a partial view of a part of the brake apparatus to which the brake circuit-closer is attached. Fig. 3 shows in section a brake circuit-closer. Fig. 4 shows a modification of Fig. 3 operating two or more successive circuits.

The reference characters are used in the same sense in all of the drawings and the specification.

Numeral 1 represents a lamp placed at the rear of the train inclosed in a suitable case and preferably supplied with a lens adapted to direct the rays from the lamp in a straight line parallel with the line of the track.

2 represents a source of electrical energy, which may be a battery, but which in the case of electric roads would ordinarily be the main source of supply taken from either a trolley-wire or "third rail," as the case may be.

3 represents a switch adapted to connect the source of supply with one or other of the conductors 4, leading from the switch to the lamp 1.

4^a is a conductor which leads from the lamp 1 to the brake circuit-closer 6.

The brake circuit-closer 6 is preferably constructed as follows: A shell 6^a is provided having a cylindrical opening at either end. In one end is mounted a hollow cylindrical member 9, insulated from the shell by means of the sleeve 10 and the disk 11. Within the member 9 is mounted a slidable rod 12, which is pressed forward by the spring 13, but is limited in its motion by the enlarged end 14. The conductor 4^a is brought through the insulating-bushing 5 in the shell 6^a and connected to the member 9. In line with the sliding rod 12 and passing out through the opposite end of the case through the insulating-bushing 8 is the sliding rod 15, the end of which is normally separated a short space from the end of the rod 12. This rod 15 is shown in Fig. 2 connected with the brake piston-rod 16 of the brake-cylinder 17 in such a way that when the brake piston-rod is operated to put the brake-rods 18 in tension, and

thereby apply the brakes, the rod 15 is caused to approach the rod 12 and make contact therewith, thus completing the circuit between the conductor 4^a and the battery by means of the conductor 4^b, attached to rod 15 or making contact therewith, the said rod 15 being insulated from the brake piston-rod 16 by means of the insulating-joint 7. It is evident that when a ground return is used, the insulators 7 and 8 are not required.

I have illustrated here a brake-cylinder and brake-levers of ordinary construction. These being well known require no description and form no part of my present invention, and it is obvious that the rod 15 may be connected to any part of the brake apparatus in such a way as to cause it to make contact with the rod 12 when the brakes are applied.

Another form of the brake circuit-closer is shown in Fig. 4, by means of which two or more lights may be operated successively—for example, it is very desirable to indicate the first application of the brakes or a slight checking of the speed of the car and subsequently to show the full application of the brake, followed by the stopping of the car. This may be accomplished by a modification such as is shown in Fig. 4, in which the inward movement of the rod 15, sliding in the opening at the end of box 6^b, makes contact with the sliding rod 12, moving through the insulated guide 10^c. The opposite end of rod 12 is fitted with suitable contact-fingers 14^b, which press against the metal contact-piece 9^a, fixed to the insulation-blocks 10^a, thus closing the circuit of lamp 1 through the conductor 4^a, connected with said metal terminal 9^a. A further application of the brakes moves the rod 12 until the fingers 14^b come into contact with the metal terminal piece 9^b, thus closing the circuit of lamp 1^a through the conductor 4^c, connected to contact-terminal 9^b. A block 11^a insulates the end of box or casing 6^b. The releasing of the brakes reverses this operation. Lamp 1^a is first extinguished upon a partial release of the brake, and when the brake is entirely released lamp 1 is extinguished. It is evident that upon full application of the brakes and lighting of lamp 1^a the circuit of lamp 1 may remain closed or may be broken, depending upon the relative position of the contact-terminals; but the former would appear to be the preferable arrangement, since there would be the double precaution of the two signal-lamps burning when the car is at a standstill.

Having thus described my invention, what I claim is—

1. In a signal for railway-cars, the combination with two or more electric circuits and signal-lamps in said circuits, of one or more circuit-breakers, connections between said circuit breaker or breakers and the brake mechanism whereby one or more circuits are made when the brakes are applied and broken when they are released, depending upon the space through which the brakes move.

2. In a signal for railway-cars, the combination with an electric circuit and signal-lamp in said circuit, of the insulated contact member 9 connected in said circuit, the sliding rod 12 slidably mounted in said contact member 9, the spring 13, the sliding rod 15, and means for connecting the sliding rod 15 with a moving member of the brake mechanism to cause said rod to contact the rod 12 when the brakes are applied.

In testimony whereof I have signed my name to this specification in the presence of two subscribing witnesses.

THOS. F. KEATING.

Witnesses:
LEWIS D. BOGGS,
RAYMOND D. VAN NAME.