Aug. 18, 1953 H. J. ROSSI ET AL 2,649,195

SINGLE BLANK CARTON WITH DISPLAY CARD COVER

Filed April 6, 1950 2 Sheets-Sheet 1

Fig. 1.

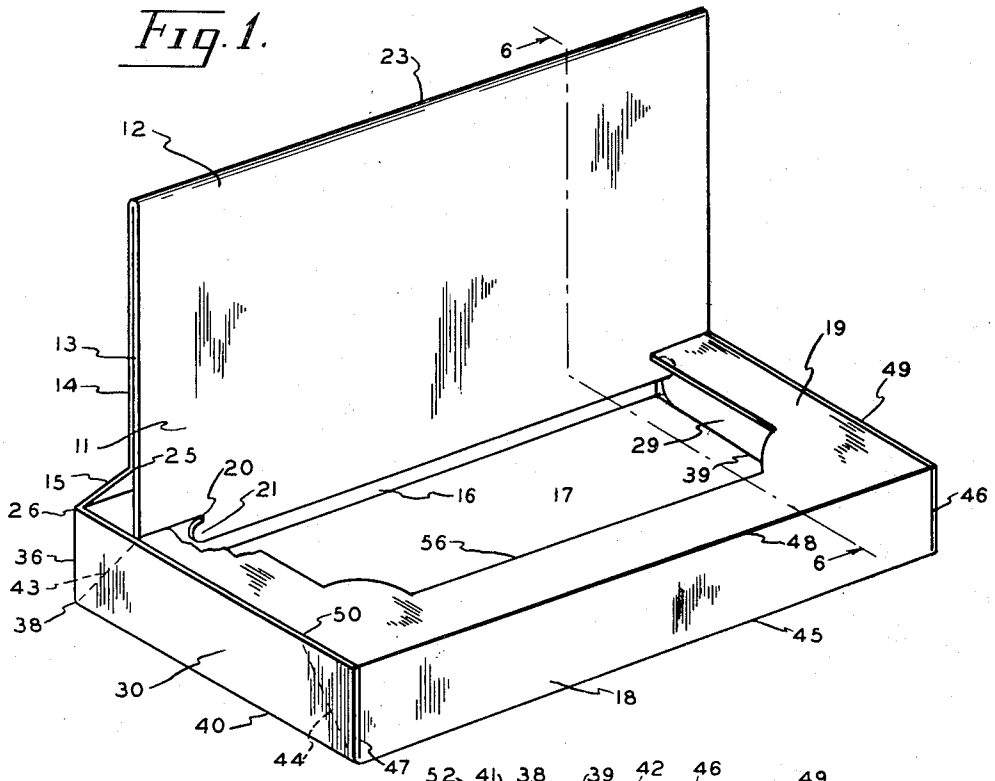

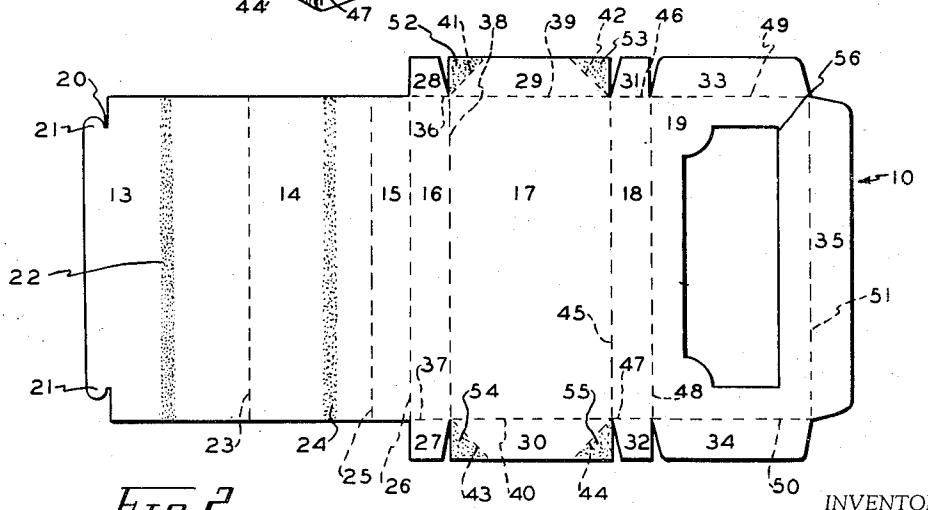

Fig. 2.

INVENTORS.

Harry J. Rossi

Arthur Morris

Aug. 18, 1953 H. J. ROSSI ET AL 2,649,195

SINGLE BLANK CARTON WITH DISPLAY CARD COVER

Filed April 6, 1950 2 Sheets-Sheet 2

Fig. 3.

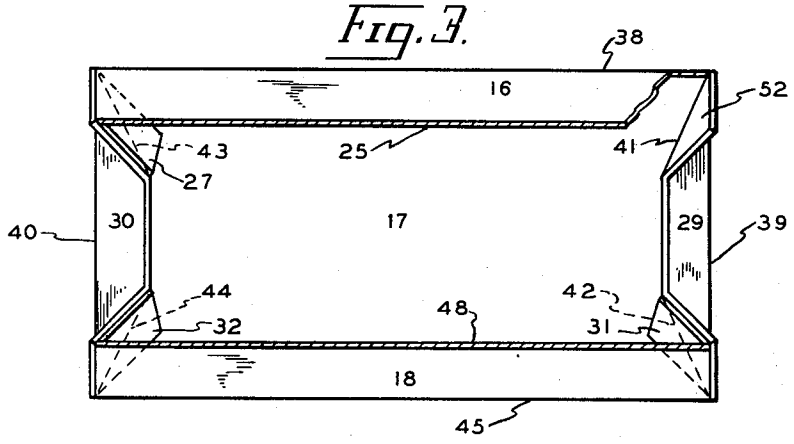

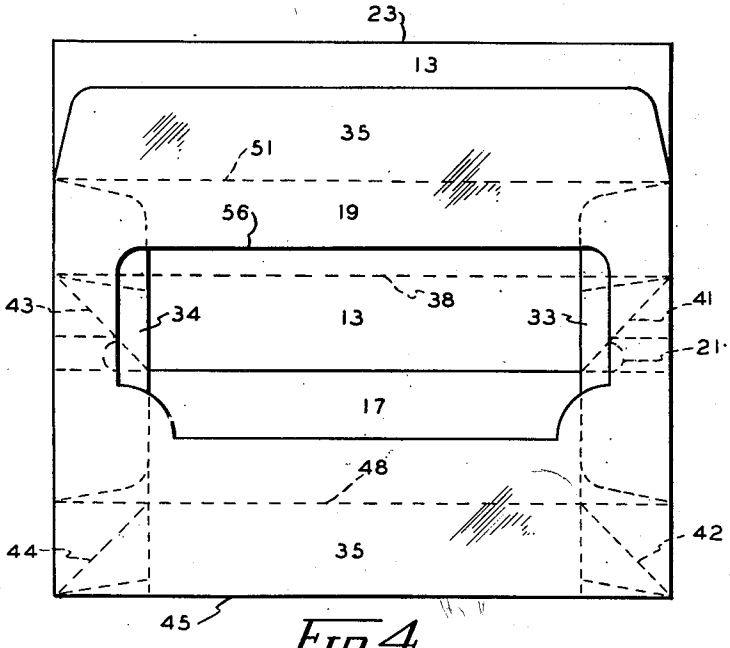

Fig. 4.

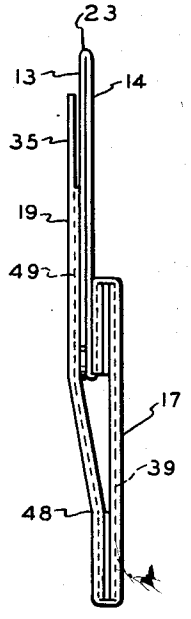

Fig. 5.

Fig. 6.

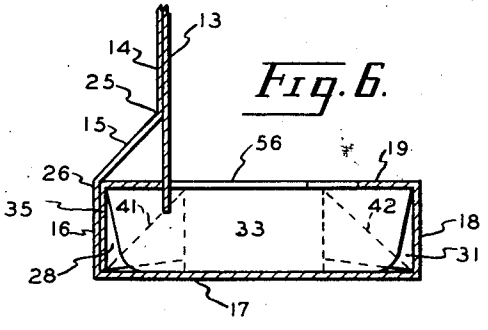

INVENTORS

Harry J. Rossi

Arthur J. Reis

Patented Aug. 18, 1953

2,649,195

UNITED STATES PATENT OFFICE

2,649,195

SINGLE BLANK CARTON WITH DISPLAY CARD COVER

Harry J. Rossi, New York, N. Y., and Arthur J. Weiss, West Englewood, N. J., assignors to Robert Gair Company, Inc., New York, N. Y., a corporation of Delaware

Application April 6, 1950, Serial No. 154,284

2 Claims. (Cl. 206—45.29)

1

This invention relates to shipping and display cartons and more particularly to a carton which folds flat until ready to be used, and which is provided with an upstanding panel for use with the contents of the box as a display.

It is an object of the instant invention to provide a shipping container which folds flat during shipment from the manufacturer to the place where it will be filled with the commodity.

The invention further provides a carton which, although folded flat during shipment, can be quickly extended to an upright position for inserting a commodity.

The invention also provides a shipping and display carton having an upright panel for the display of advertising printed thereon, which panel is so constructed as to stand vertically with little danger of being knocked out of place by movement of the carton.

The instant invention further provides a carton provided with an open window in the top surface so that the contents may be seen during display, and which is also provided with a vertical panel for carrying printed matter, which panel may also be used to cover the opening in the top of the panel in order to display the contents.

It is a further object of this invention to provide a shipping and display carton as described above in which the construction is such that it can be made on standard box-making machinery and the gluing and assembly of which presents no problems of construction.

The instant invention is such that it provides a novel structure that provides for the folding of the carton into a flat position when not being used as a receptacle for a commodity.

The invention also consists of certain new and original features of construction and combinations of parts hereinafter set forth and claimed.

Although the novel features which are believed to be characteristic of this invention will be particularly pointed out in the claims appended hereto, the invention itself has many objects and advantages, the mode of operation and the manner of organization of which may be better understood by referring to the following description made in connection with the accompanying drawings forming a part thereof, in which:

Figure 1 is a perspective view of the carton of the instant invention with the display panel in position and with the contents omitted.

Figure 2 is a plan view of a blank used in the construction of the instant invention, as it appears before being assembled.

2

Figure 3 is a plan view of the assembled box of the instant invention, with parts and portions cut away, in its position when half-way between folded position and open position for use as a container.

Figure 4 is a plan view of the box of the instant invention showing it assembled but in folded position for shipment to the place where it will be filled with the commodity it was designed to contain.

Figure 5 is an elevation view of the device as shown in Figure 4, looking at the folded carton from the right hand side.

Figure 6 is a cross section view of the device of the instant invention taken on the line 6—6 of Figure 1, and looking in the direction of the arrows, and having a portion of the display panel cut away.

Like reference characters denote like parts of the several figures in the drawings.

It has been the practice heretofore to provide boxes for the shipment of goods which provide a means of displaying the contents for retail sale. Some of the difficulties encountered in the prior devices are that they do not fold flat for shipment to the place where they are to be sold with the commodity and forwarded for sale. In addition, the prior art devices demand a great deal of assembly work at the time that they are filled with the commodity. Also, the previously used cartons, although they provide a vertical display panel, do not provide one that has sufficient strength to withstand the movement and abuse to which the display may be put in the average retail store.

In the following description and the claims parts will be identified by specific names for convenience, but they are intended as generic in their application to similar parts as the art will permit.

The particular embodiment of the invention shown comprises a cardboard blank, generally designated 10, which is folded to form the finished carton. The blank 10 is printed on one side 11 in a manner commensurate with the use to which it is to be put. The carton is provided with a panel 12 which serves dual purposes as a cover and a display panel. The cover 12 comprises a panel 13 and a panel 14 which are defined by the fold line 23. The cover 12 is made by folding 13 and 14 together about the fold line 23 and gluing along areas 22 and 24. Adjacent the panel 14 and separated from it by fold line 25 is the cover brace 15; adjacent the cover brace 15 and separated from it by the fold line 26 is

the rear wall 16. Adjacent the rear wall 16 is the bottom panel 17 which is defined by the fold line 38, and adjacent the bottom panel 17 and defined by the fold line 45 is the front wall 18. On the other side of the front wall 18 is the top wall 19 which is separated from the panel 18 by the fold line 48. The rear wall 16 is provided with tabs 27 and 28 which are defined by fold lines 37 and 36, respectively. The bottom panel 17 is provided with end walls 29 and 30 which are defined by fold lines 39 and 40, respectively. The end walls 29 and 30 are of generally rectangular formation and are bent along diagonal fold lines 41, 42, 43, and 44 which define triangular glue areas 52, 53, 54, and 55, respectively. The front wall 18 is provided with tabs 31 and 32 which are defined by the fold lines 46 and 47, respectively. The top wall 19 is of generally rectangular shape and, as has been said, is attached at one side to the panel 18 along the fold line 48. On its other three sides, it is provided with tabs 33, 35, and 34, which are defined by the fold lines 49, 51, and 50, respectively. The top wall 19 is also provided with a cut-out portion 56, which will be described in greater detail further on. Triangular cut-outs are made between the end wall 29 and its adjacent tabs 28 and 31 and the end wall 30 and its adjacent tabs, 27 and 32, in such a manner that the side of each of the aforesaid tabs which is adjacent the end wall slopes away from said end wall to provide clearance. The side of the rectangular panel 13 opposite the panel 14 is provided with inwardly-cut slots 20 which define tabs 21 and 22, which tabs extend away from each other and are used in a manner to be described later on.

It has been noted that in the assembly of the carton, the panels 13 and 14 are glued together along areas 22 and 24. These glue areas 22 and 24 run lengthwise of the panel in a position intermediate of their width. This means that when the panels 13 and 14 are glued together the areas around the fold line 25 and around the tabs 21 are separable from each other. In assembling the box the panel 16 is bent about the fold line 38 to a position at right angles to the panel 17, and the panel 18 is bent about the fold line 45 to a position at right angles to the panel 17. In a similar manner, the tabs 28, 31, 27 and 32 are bent about the fold lines 36, 46, 47, and 37, respectively, and to positions at right angles to their respective panels. The end walls 29 and 30 are bent up about the fold line 39 and 40, respectively, and to positions at right angles to the panel 17. The areas 52, 53, 54, and 55 are glued to their respective tabs 28, 31, 27, and 32, respectively, externally thereof. This forms a tray in which the member 17 is the bottom, the member 16 is the rear wall, the member 18 is the front wall, the member 29 is one end wall, and the member 30 is the other end wall. The member 19 is bent about the fold line 28, and until it is in position parallel to the bottom 17. The tabs 33, 35, and 34 are bent at right angles to the top wall 19 about the fold lines 49, 51, and 50, respectively, and these tabs are inserted inside the tray to hold the member 19 in its position as top wall of the carton. At this point the panels 15, 14, and 13 extend vertically upward. By bending the panel 15 about the fold line 26 and forwardly of the rear wall and bending the panels 13 and 14 backwardly along the fold line 25, cover 12 is brought to a vertical position, with a brace member 15 extending between the bottom edge of the panel 14 and the top edge of the rear wall 16. Tabs 21 are inserted through the cutout 56 of the top wall 19, and the panel 12 is drawn back until the edges of the cutout 56 are embraced by the sides of the slots 20 in the panel 13. The sizes and shapes of the panels are so arranged that when this has been done and the tabs 21 and the panel 13 to which they are attached are drawn to the most rearward position in the cutout 56, the cover 12 is in a vertical position.

To permit the carton to fold for shipment minus contents from the manufacturer of the box to the place where the contents are to be inserted, use is made of the fold lines 41, 42, 43, and 44, on the end panels 29 and 30. The use of this foldable end wall structure is best illustrated in Figure 3, where the box, minus the top wall and the display panel or cover, is shown in a position half-way between operative display position and folded shipment position. It can be seen from Figure 3 that, when pressure is brought to bear on the center portion of the end panels 29 and 30, the rear wall 16 moves forwardly about the fold line 38 and the front wall 18 moves rearwardly about the fold line 45, the unglued portion of the tabs 27, 28, 31, and 32, swing clear of the bottom 17, and the glue areas 52, 53, 54, and 55 of the end walls 29 and 30 move downward toward the remaining portion of the end walls 29 and 30 until they are in juxtaposition thereto. When the glue areas 52, 53, 54, and 55 are in juxtaposition to the remaining area of the panel 29 and 30, the carton is in folded, flat position. This folded position is best shown in Figure 4 and in Figure 5, where the cover 12 is shown as folded about the fold line 25 and lies flat with the panel 14 in juxtaposition to the panel 15 and 16, which in turn lie next to the bottom 17. As shown in Figure 4, the top wall 19 is bent about the fold line 48 so that it lies generally in the same plane as the front wall 18, and overlies the panel 13 of the cover 12.

In Figure 6 is shown a sectional view of the device assembled as in Figure 1, and in that view can be seen the arrangement of the members which make up the end wall of the structure. Figure 6 also shows the arrangement whereby the cover 12 is held in vertical display position.

In the manufacture of the carton, the gluing together of panel 14 presents no technical problem. The gluing can be done between rollers in the manner well known in the art. Furthermore, the other gluing problem that generally arises in prior art devices is the gluing of the end structure. The end structure of the instant device is so arranged that in gluing the glue areas 52, 53, 54, and 55, to their respective tabs, 28, 31, 32, and 27, gluing can be done between rollers by folding the carton into the folded position shown in Figure 4 and running the whole box between rollers or other similar gluing devices. Thus, there is no need for entrance of fingers or backing members into inaccessible corners of the box during construction. Thus, it can be seen that the carton of the instant invention can be produced in quantity on automatic machinery.

The assembled carton has the appearance presented by Figure 1, in which it is shown in position to display the contents through the opening 56, and also to display advertising which may be printed on the back and front of the cover 12.

It is contemplated that the device of the instant invention will be made by a manufacturer and produced in the condition shown in Figure 4.

That is, folded and flat, and in such a condition that great quantities can be shipped without occupying appreciable space. It is also evident that, when the folded box reaches the place where it is to be filled with the commodity to be sold, a simple motion causes the end wall **29** and **30** to come up into vertical position with respect to the bottom **17**, after which the contents can be inserted in the box, the tabs **33**, **34**, and **35** inserted into the open end of the tray, and the top wall **19** brought into position, after which the cover **12** is closed over the top wall **19** to form a shipping container for the goods. Later on, when the goods have been shipped to the retailer, the retailer merely brings the cover **12** up into vertical position by a simple movement, the contents can be seen through the opening **56**, and the cover **12** is in a position where its advertising can be readily seen. Furthermore, it is evident that the interlocking of the panel **13** with the opening **56** and the provision of a brace member **15**, combined with the resilient action of the portions of the panel **13** and **14** that are below the glue areas **22** and **24**, provide a strong and durable display member.

While certain novel features of the invention have been shown and described, and are pointed out in the annexed claims, it will be understood that various omissions, substitutions, and changes in the form and details of the device illustrated and in its operation may be made by those skilled in the art without departing from the spirit of the invention.

What is claimed is:

1. A carton formed from a single piece of paperboard comprising a tray having a bottom, rear and front walls, and two end walls, a top wall integrally hinged to the top edge of the front wall, a cover integrally hinged to the top edge of the rear wall, the top wall being provided with foldable tabs on its unhinged sides for insertion into the tray and for spacing the top wall on the bottom wall, said top wall also being provided with a display aperture which extends over a substantial portion of said top wall, said cover being adapted to be raised into a vertical position to uncover the aperture in the top wall for exposure of the contents of the tray, said cover being separated by fold lines into first, second, and third panels, said first panel being the portion of the cover that is hinged to the rear wall of the tray and to the second panel, the third panel being in turn folded into juxtaposition to the second panel, so that, when the cover is used for display purposes, the second and third panels extend vertically and the first panel extends rearwardly and downwardly at an angle to them and acts as a bracing means, said third panel being somewhat longer than said second panel and having its free end slotted at its opposed edges to form tabs for embracing the edges of the aperture, and securing means holding said second and third panels in face-to-face contact.

2. A container formed of a single blank of sheet material comprising a tray having a bottom, rear and front walls, and two end walls, a top wall integrally hinged to the top edge of the front wall, a cover integrally hinged to the top edge of the rear wall, the top wall being provided with foldable tabs on its unhinged sides for insertion into the tray and for spacing the top wall from the bottom wall, said top wall also being provided with a display aperture which extends over a substantial portion of said top wall, the cover being adapted to lie in juxtaposition to the top wall in which position it is coextensive with the top wall, said cover being further adapted to be raised into a vertical position to uncover the aperture in the top wall for exposure of the contents of the tray, said cover being separated by first, second and third panels, said first panel being the portion of the cover that is hinged to the rear wall of the tray and to the second panel, the third panel being in turn folded into juxtaposition to the second panel, so that, when the cover is used for display purposes, the second and third panels extend vertically and the first panel extends rearwardly and downwardly at an angle to them and acts as a bracing means, said third panel being somewhat longer than said second panel and having its free end slotted at its opposed edges to form tabs for embracing the edges of the aperture, and securing means holding said second and third panels in face-to-face contact.

HARRY J. ROSSI.
ARTHUR J. WEISS.

References Cited in the file of this patent

UNITED STATES PATENTS

Number	Name	Date
1,382,979	Horr	June 28, 1921
1,472,953	Bamber	Nov. 6, 1923
1,616,708	Tanner	Feb. 8, 1927
2,137,420	Soybel	Nov. 22, 1938
2,295,515	Hoag	Sept. 8, 1942
2,322,849	Horr	June 29, 1943
2,375,843	Gottlieb	May 15, 1945

FOREIGN PATENTS

Number	Country	Date
214,321	Great Britain	Apr. 16, 1924
218,525	Great Britain	July 10, 1924
443,311	Great Britain	Feb. 26, 1936