Nov. 20, 1934. J. J. DUTTWEILER 1,981,166

BUILDING CONSTRUCTION

Filed April 6, 1932 4 Sheets-Sheet 1

Fig. 1.

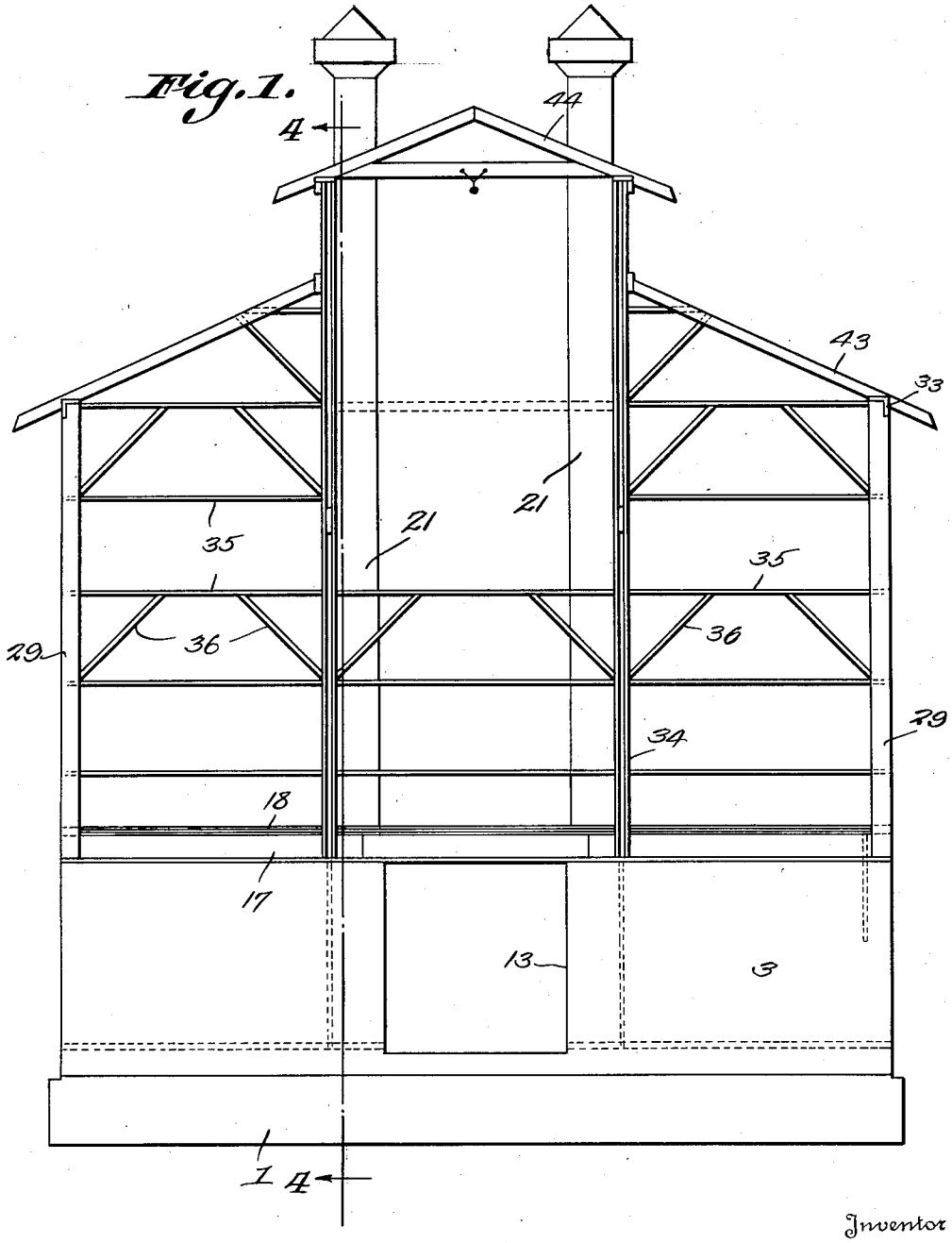

Inventor

J. J. Duttweiler

By C. A. Snow & Co.

Attorneys.

Nov. 20, 1934. J. J. DUTTWEILER 1,981,166

BUILDING CONSTRUCTION

Filed April 6, 1932 4 Sheets-Sheet 2

Fig. 2.

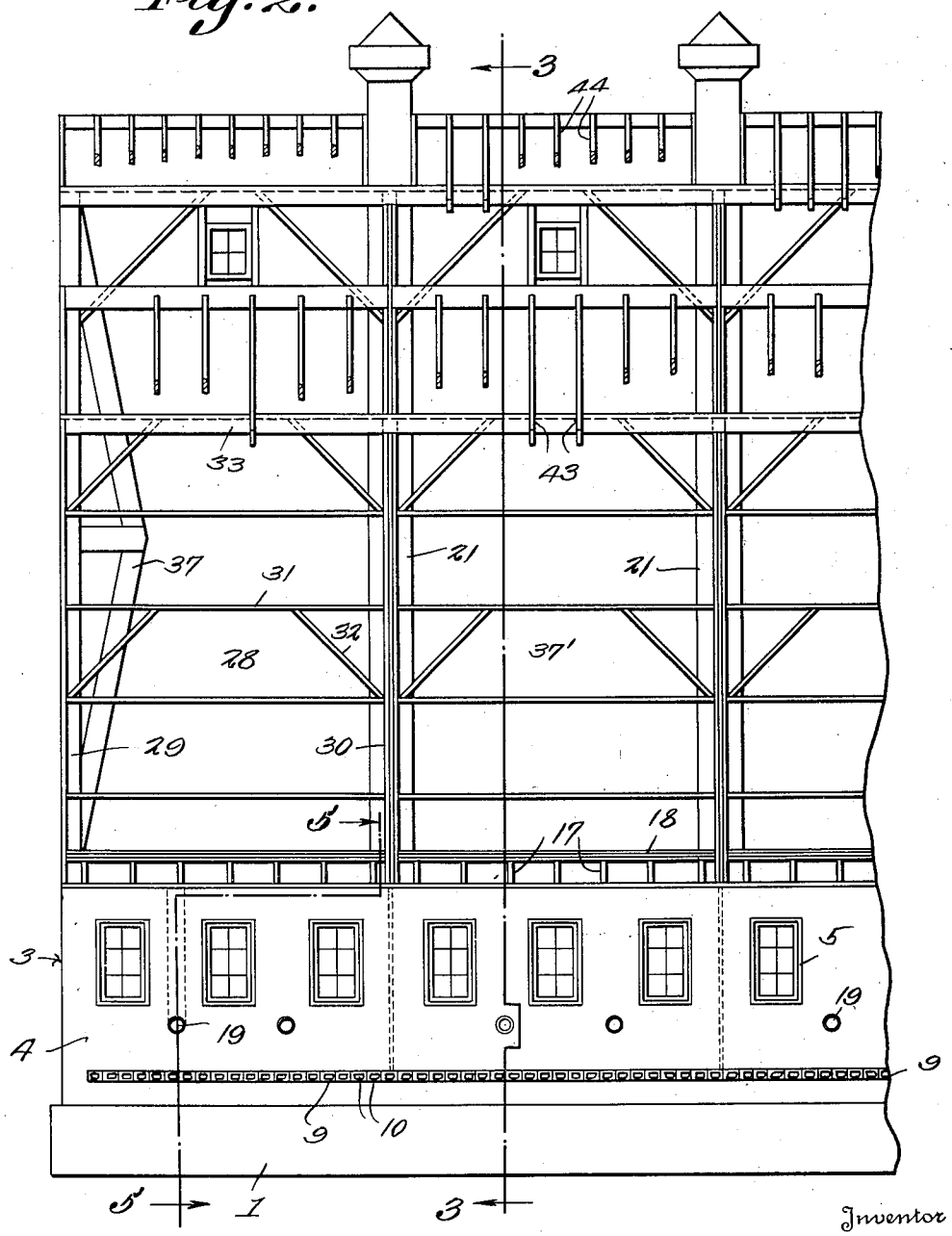

Inventor

J. J. Duttweiler

By Crowell & Co.

Attorneys.

Nov. 20, 1934. J. J. DUTTWEILER 1,981,166

BUILDING CONSTRUCTION

Filed April 6, 1932 4 Sheets-Sheet 3

Fig. 3.

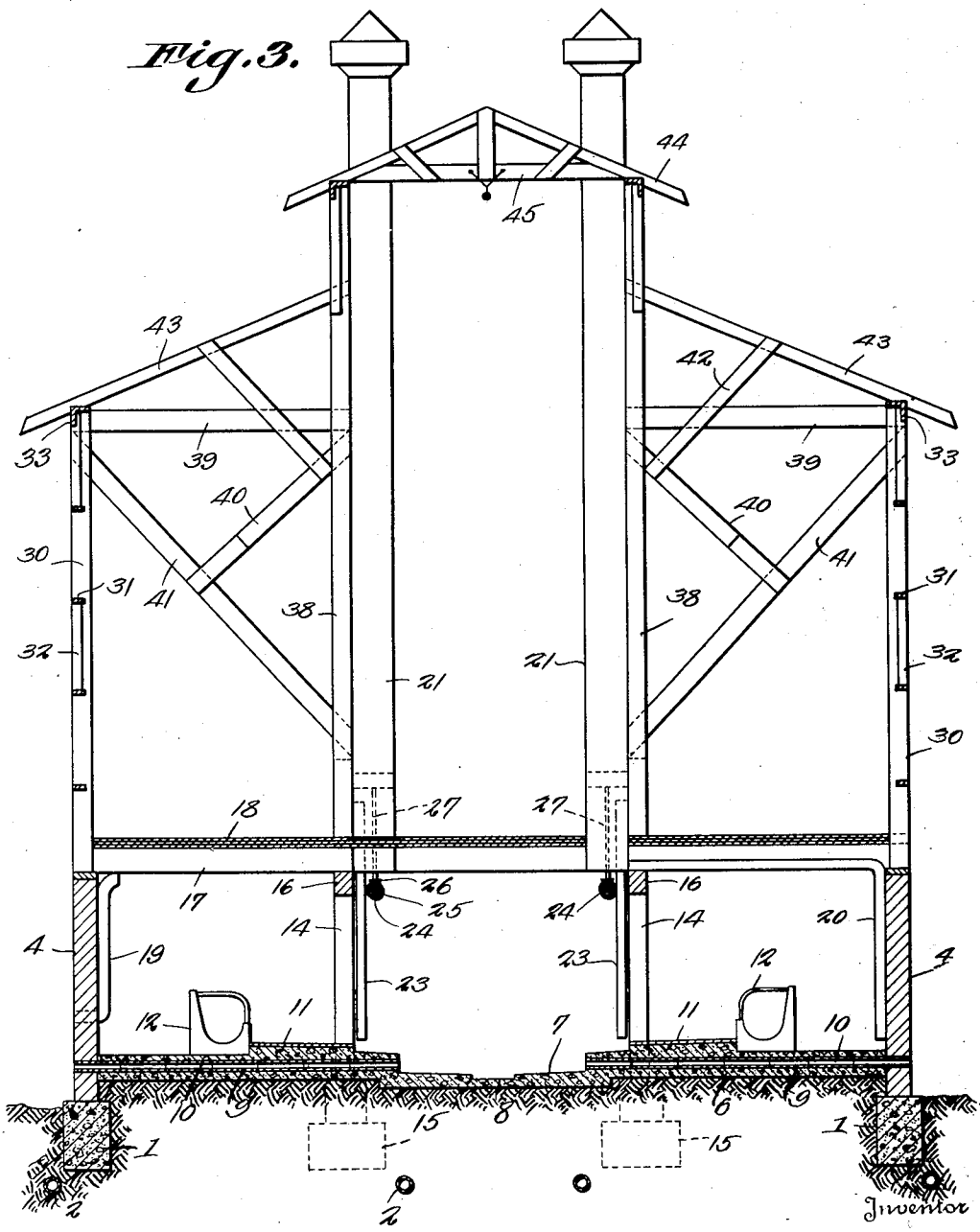

Inventor

J. J. Duttweiler

By C. A. Snow & Co.

Attorneys.

Nov. 20, 1934. J. J. DUTTWEILER 1,981,166

BUILDING CONSTRUCTION

Filed April 6, 1932 4 Sheets-Sheet 4

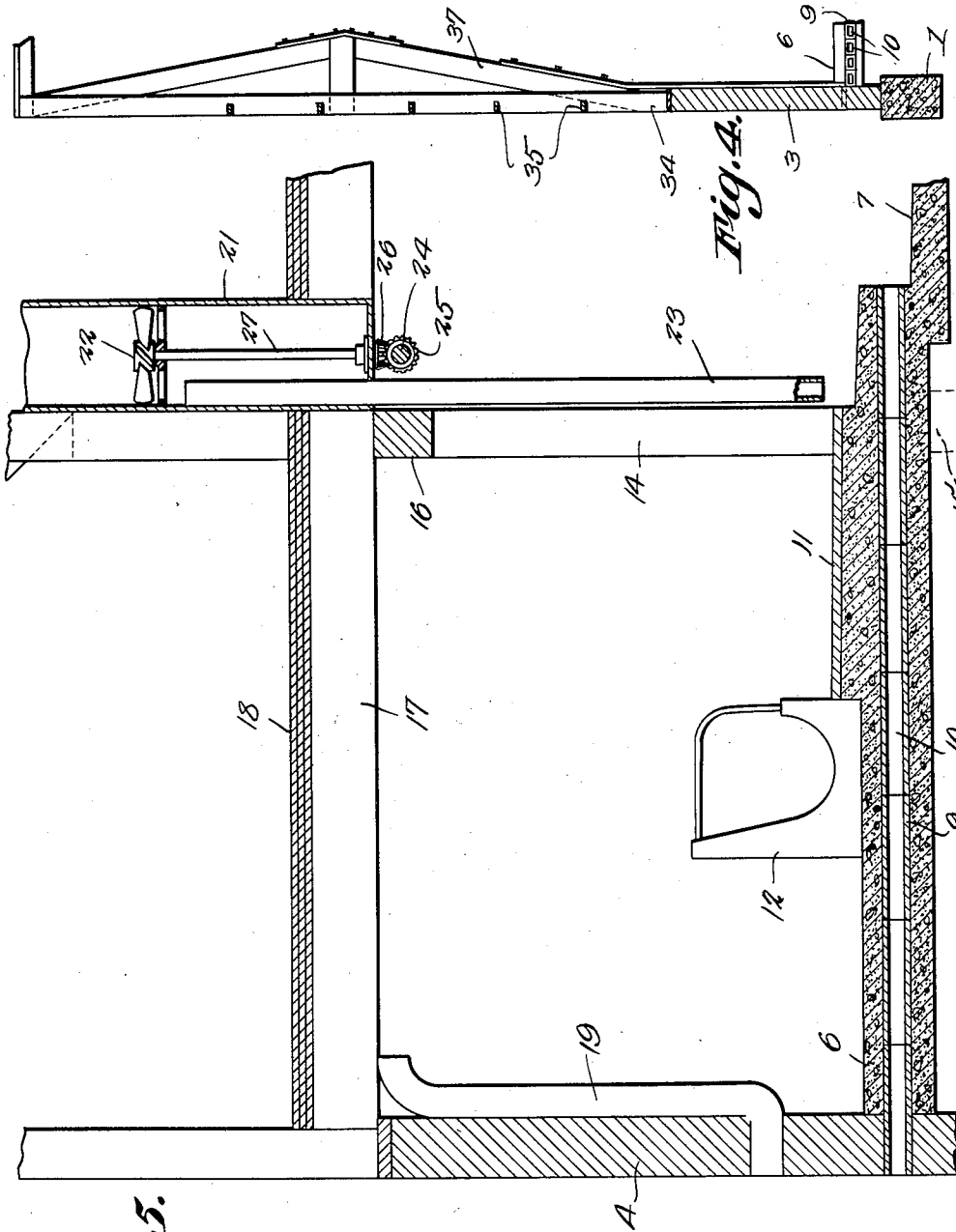

Fig. 4.

Fig. 5.

Inventor

J. J. Duttweiler

By C. A. Snow & Co.

Attorneys.

Patented Nov. 20, 1934 1,981,166

UNITED STATES PATENT OFFICE

1,981,166

BUILDING CONSTRUCTION

John J. Duttweiler, Findlay, Ohio

Application April 6, 1932, Serial No. 603,657

1 Claim. (Cl. 119—16)

This invention relates to a building construction and is more especially adapted for barns and similar structures.

The invention constitutes an improvement on the structure disclosed in Patent 777,945 issued to me on December 20, 1904.

One of the objects is to provide a barn or the like the lower portion of which can be used for holding livestock while the upper portion can be utilized for the storage of farm products, means being employed for properly ventilating the lower portion so that the livestock can be kept under correct sanitary conditions.

A further object is to provide means for maintaining a circulation of fresh air within the lower portion of the structure and for exhausting the heavy foul air so that it will not affect the livestock nor contaminate the material stored in the upper portion of the building.

A still further object is to improve upon the construction of the lower portion of the barn so that it will protect the livestock from dampness.

A still further object is the construction of the upper portion of the structure in sections which can be assembled readily and will provide a strong building capable of withstanding excessive wind pressures.

With the foregoing and other objects in view which will appear as the description proceeds, the invention resides in the combination and arrangement of parts and in the details of construction hereinafter described and claimed, it being understood that changes in the precise embodiment of the invention herein disclosed may be made within the scope of what is claimed without departing from the spirit of the invention.

In the acompanying drawings the preferred form of the invention has been shown.

In said drawings:

Figure is an end elevation of the structure, the sheathing being removed to show the construction of the end bent.

Figure 2 is a side elevation likewise having the sheathing removed to show some of the intermediate bents, some of the rafters being broken away.

Figure 3 is a vertical transverse section taken on the line 3—3 of Figure 2.

Figure 4 is a vertical sectional view taken on the line 4—4 of Figure 1.

Figure 5 is a vertical sectional view taken on the line 5—5 of Figure 2.

Referring to the figures by characters of reference 1 designates suitably located foundations of concrete and at any desired points below and between these can be arranged drain tiles 2. The side and end walls have been indicated at 3 and 4 respectively and can be provided with suitable outlets 5 where deemed desirable.

The floor 6 is formed of a heavy slab of concrete with a central depressed portion 7 forming a passageway the bottom of which is inclined so as to drain into a central gutter 8. Hollow tiles 9 are embedded in the slab 6 so as to provide air passages 10 which open outwardly through the side walls 3 and inwardly into the sides of the passageway 7. Thus when heavy vitiated air collects in the lowest portion of the structure it will be free to escape through the passages 10 into the outer atmosphere. The tiles 9 also serve to prevent moisture from passing through the floor slab 6 where it would be objectionable to the livestock.

At each side of the passageway 7 the floor slab 6 is formed with a standing platform 11 and between this platform and the adjacent side wall 3 is erected a manger 12. This manger can be used for holding either food or water, as preferred.

Door openings can be provided at the ends of the passageway 7, as indicated at 13, and obviously access can thus be had readily to all of the stock arranged on the platforms 11 along the opposed sides of the passageway 7.

Posts 14 are located at desired points adjacent to the sides of passageway 7 and are preferably mounted on foundations indicated generally at 15. These posts support girders 16 on which are mounted the floor joists 17 of the structure. The flooring indicated at 18 can consist of two or more thicknesses with interposed layers of sealing paper or the like whereby the space above the floor will be fully protected from the lower portion of the building. This floor can constitute the ceiling of the space thereunder.

In order that a proper circulation of fresh air may be maintained when desired within the lower portion of the building and the heavy vitiated air may be carried off positively, a desired number of air intake flues 19 are provided in one or both side walls 3 and open upwardly into the structure close to but under the joists 17. Other or outlet flues 20 can be extended upwardly along either or both side walls to large ventilating flues 21 extended upwardly within the structure, hereinafter described, so as to vent through the roof thereof.

The lower or inlet ends of flues 20 are close to floor 6 and arranged within each of the large

ventilating flues is a fan 22 constituting a blower for setting up a forced draft in an upward direction. Additional outlet flues 23 can be extended through the ventilating flues 21 from points near the platforms 11 and sides of passageway 7.

All of the fans 22 along each side of the building can be driven by a single drive shaft 24 through gears 25 and 26, the latter gears 26 being secured to the shafts 27 of the fans. Shafts 24 can be operated by a motor, not shown, or by any other suitable means whereby a forced ventilation can be set up whenever desired. The operation of these fans will cause heavy vitiated air to be lifted through flues 22 and 23, it being displaced by a supply of fresh air admitted through the flues 19. During the operation of the fans the heavy air will not tend to escape through the passages 10 but, on the contrary, fresh air will be sucked through said passages. These passages act as outlets for vitiated air only when the fans are not in use and when the vitiated air is heavier than the fresh air.

Obviously by constructing the lower portion of the building in the manner described the livestock can be kept in a dry and healthy condition.

The superstructure of the building can be formed of sections which can be assembled and bolted together. The end section of one side wall, which has been indicated generally at 28, is erected by setting up a corner post 29, one half 30 of a side post and horizontal and oblique connections 31 and 32 between these posts. The posts are, of course, fastened at their lower ends and are connected at their upper ends by the plate 33. Subsequently one half 34, of an end purline post is erected and this too is joined to the corner post 29 by horizontal and oblique braces 35 and 36. Thereafter an end truss, indicated generally at 37, is fastened to one side of the member 34 of the purline post.

Following the foregoing operation other side wall sections, indicated at 37', are erected on the lower side walls and are joined to each other and to the section 28 by lag screws or other fasteners. Intermediate purline posts 38 are erected in line with the post 34 and are joined to the sides of the sections 28 and 37' by girders 39 and braces 40 and 41. Lower rafters are erected on the posts 29, 30 and 38 as indicated at 43. The construction of the building as described is continued until all of the walls have been erected, the purline posts 38 being used for supporting the upper rafters 44 and their braces 45. The ventilating flues 21 are extended upwardly along either of the purline posts and between the rafters 44. It is to be understood, of course, that openings can be located wherever desired, the wall sections of the building being closed with suitable sheathing, such as tongue and grooved boards.

The roofing can be of any desired type.

A superstructure such as described can be assembled readily and will afford maximum rigidity for resisting wind pressures but can be made of lighter timbers than ordinarily would be required in order to obtain equivalent results.

What is claimed is:

In a building construction a floor slab having a relatively broad depressed portion constituting a passageway for cattle, said slab providing spaces at opposite sides of the passageway for the support of mangers, there being a gutter extending longitudinally of the passageway below and at the center thereof, laterally extending flues within the slab opening at their outer ends through the outer sides of the slab and at their inner ends through the respective walls of the passageway above the level of the gutter, and means for supplying fresh air above the slab for downward circulation into the passageway and outward through the flues.

JOHN J. DUTTWEILER.