US00D406192S

# United States Patent [19]

**Schurman**

[11] **Patent Number: Des. 406,192**

[45] **Date of Patent: **Mar. 2, 1999**

[54] **CARRYING CASE WITH INTEGRAL HANDLE**

[75] Inventor: **Peter T. Schurman**, Woodbridge, Conn.

[73] Assignee: **The Plastic Forming Company, Inc.**, Woodbridge, Conn.

[**] Term: **14 Years**

[21] Appl. No.: **72,019**

[22] Filed: **Jun. 18, 1997**

[51] **LOC (6) Cl.** ..... **03-01**

[52] **U.S. Cl.** ..... **D3/282**

[58] **Field of Search** ..... D3/273, 276, 281, D3/282, 905; 190/110, 111, 112, 113, 114, 115

[56] **References Cited**

U.S. PATENT DOCUMENTS

| | | | |
|---|---|---|---|
| D. 194,339 | 1/1963 | Harty, Jr. | D3/282 |
| D. 291,946 | 9/1987 | Dottori et al. | D3/282 |
| D. 314,669 | 2/1991 | Kunimune | D3/282 |
| D. 321,985 | 12/1991 | Ward | D3/282 |
| D. 343,063 | 1/1994 | Chen | D3/905 |
| D. 351,504 | 10/1994 | Tarozzi | D3/282 |
| D. 351,727 | 10/1994 | Tarozzi | D3/276 |
| D. 357,117 | 4/1995 | Huang | D3/282 |
| D. 384,501 | 10/1997 | Rosen | D3/276 |
| D. 391,760 | 3/1998 | Zeller | D3/276 |

*Primary Examiner*—Philip S. Hyder
*Attorney, Agent, or Firm*—Bachman & LaPointe, P.C.

[57] **CLAIM**

The ornamental design for a carrying case with integral handle, as shown and described.

**DESCRIPTION**

FIG. **1** is a perspective view of the carrying case of the present invention;
FIG. **2** is a front view of the carrying case of FIG. **1**;
FIG. **3** is a rear view of the carrying case of FIG. **1**;
FIG. **4** is a side view of the carrying case of FIG. **1**;
FIG. **5** is a top view of the carrying case of FIG. **1**; and,
FIG. **6** is a bottom view of the carrying case of FIG. **1**.

**1 Claim, 5 Drawing Sheets**

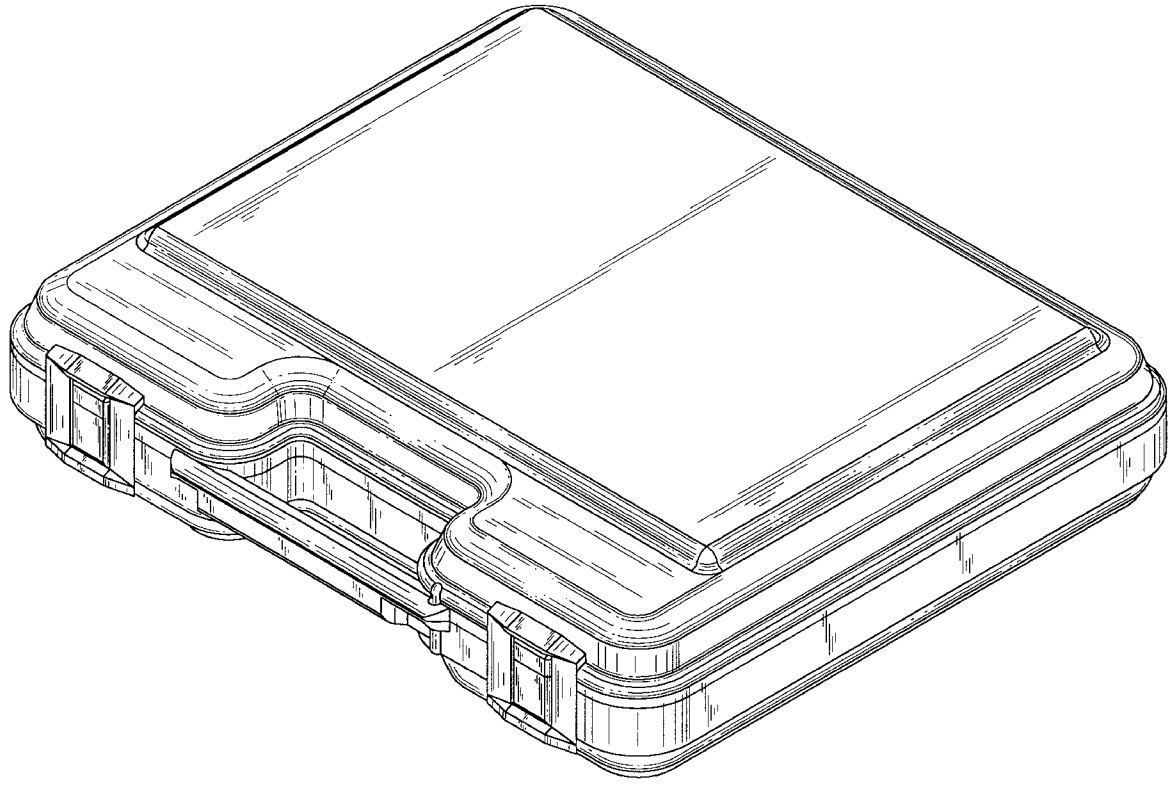

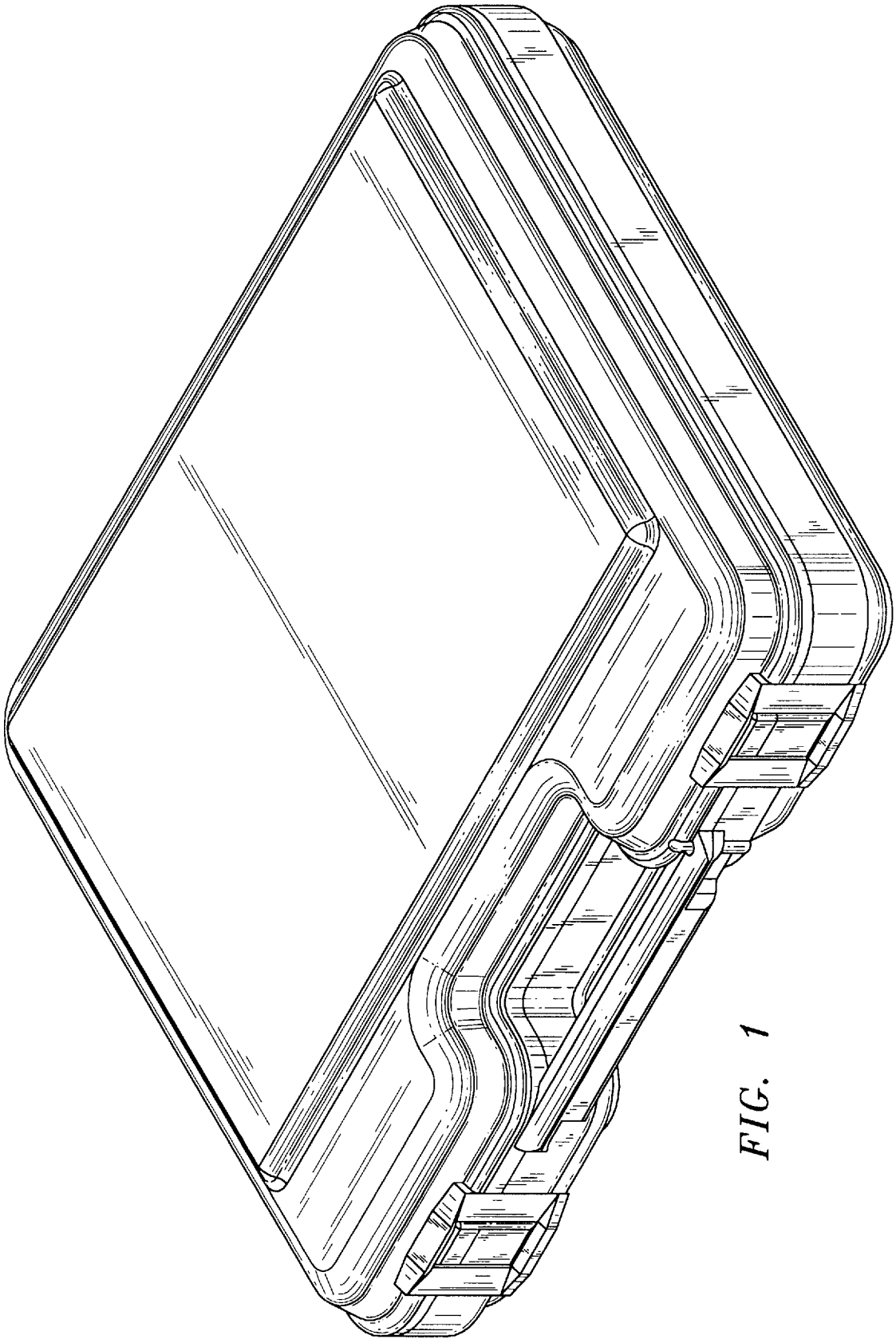

FIG. 1

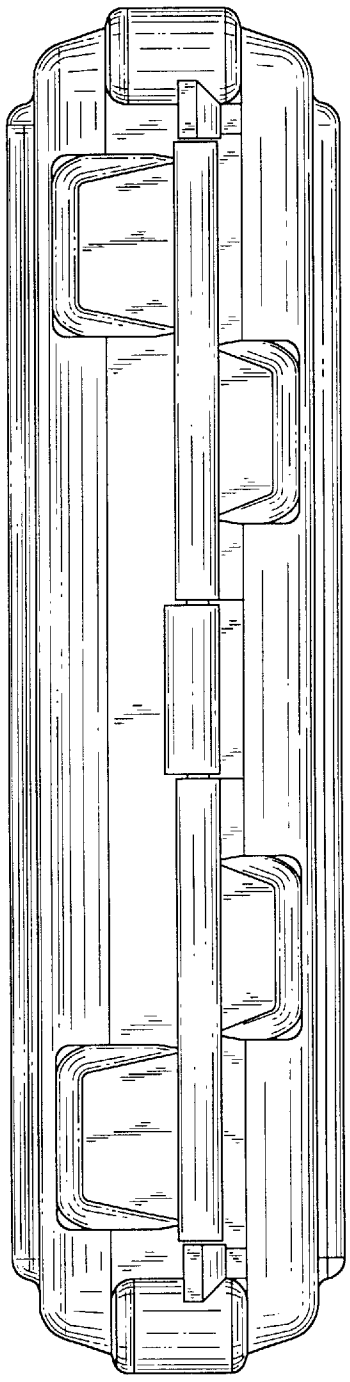

FIG. 3

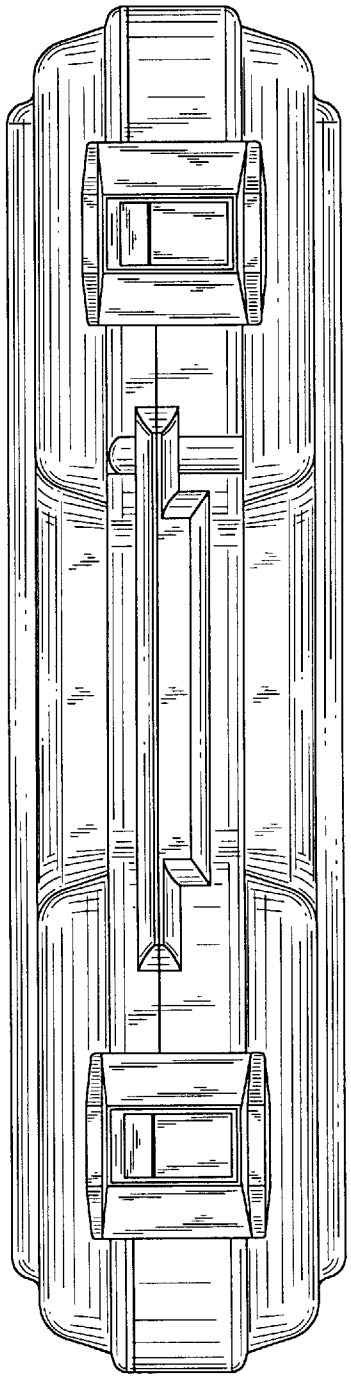

FIG. 2

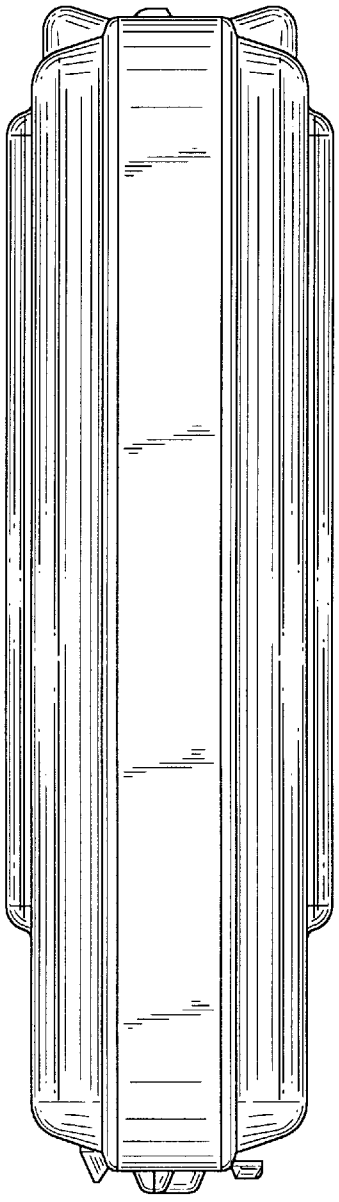

FIG. 4

FIG. 5

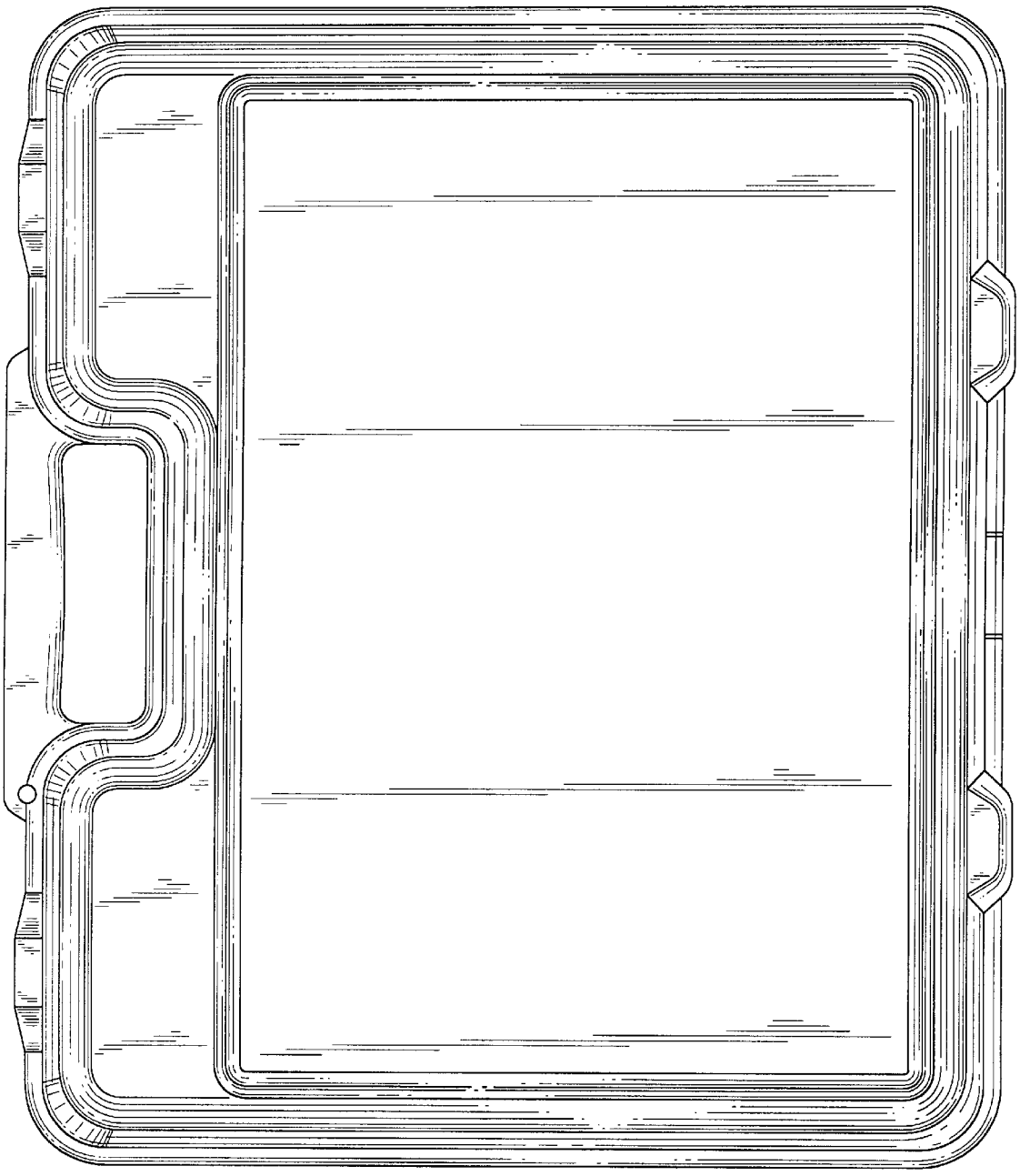

FIG. 6

