June 24, 1941. M. W. EATON 2,246,724

ELECTRIC SWITCH

Original Filed Dec. 4, 1935

Fig. 1

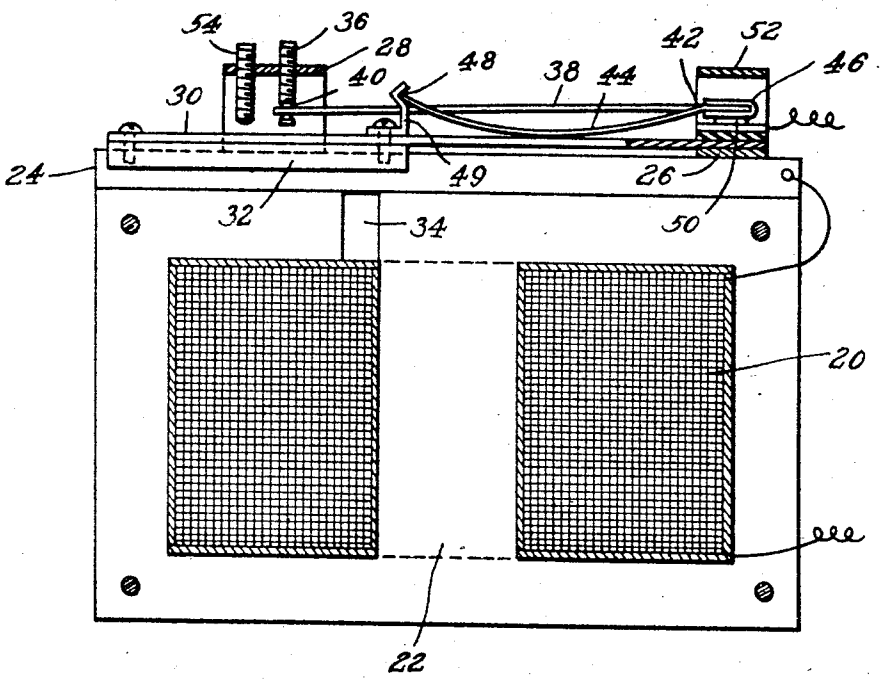

Fig. 2

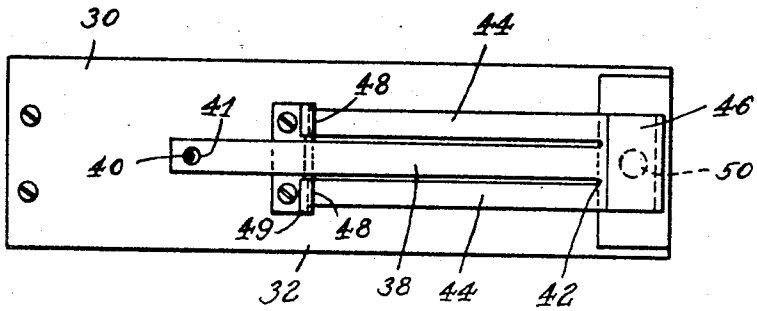

Inventor:
M. W. EATON

By Karl H Sommermeyer
Atty.

Patented June 24, 1941

2,246,724

UNITED STATES PATENT OFFICE

2,246,724

ELECTRIC SWITCH

Malcolm W. Eaton, Freeport, Ill., assignor to Micro Switch Corporation, Freeport, Ill., a corporation of Illinois

Original application December 4, 1935, Serial No. 52,771, now Patent No. 2,170,748, dated August 22, 1939. Divided and this application August 21, 1939, Serial No. 291,160

3 Claims. (Cl. 200—67)

This invention relates to snap switches, and more particularly to electrically operated switch mechanisms for timing periodical occurrences.

This application is a division of my co-pending application, Serial No. 52,771, filed December 4, 1935, now Patent No. 2,170,748, issued August 22, 1939.

Objects of the invention include the provision of a switch that requires a minimum of power for its operation, the provision of an efficient and reliable apparatus for controlling a periodic or intermittent passage of electric current, and the provision of an improved electric snap switch construction.

The specification is to be read in conjunction with the drawing which discloses a specific embodiment of my invention, and in which:

Fig. 1 is a cross sectional elevation of an embodiment of my improved switch used in conjunction with an electro magnet for providing controlled intermittent flow of electric current through said electric magnet; and

Fig. 2 is a partial plan of view of the device of Fig. 1 showing the switch mechanism and the general arrangement of the movable elements thereof.

The construction shown in the drawing may be used wherever it is desirable to secure controlled intermittent passage of electric current. The specific application shown is for the operation of a flasher device in which a neon-filled tube or other partially evacuated or fluorescent tube is used. In Fig. 1 the switch is combined with an induction coil and is operated by the magnetic field thereof by means of an armature mounted upon an element of the switch. The snap switch is mounted directly on the electromagnet of the induction coil which is used to step up the voltage to that required to flash the luminous tube operated thereby. Since the source of energy is unidirectional, for example, that supplied by a primary or secondary battery, means are provided for interrupting the energy supply in order to produce pulsations in the primary of the induction coil whereby the required higher voltages are induced in the secondary thereof. In flashing devices of this type, especially when they are used for roadside warning signs, it is desirable to have the device flash at comparatively long intervals of time, say one flash every one-half to three seconds, it being necessary further to be able to control exactly the timing of these flashes. My improved switch when mounted as shown in Fig. 1 fulfills these requirements, and furthermore is rugged, economical to operate and has a minimum of moving parts.

In the electromagnet shown in Fig. 1 the windings 20 set up a magnetic field in the laminated iron core 22. The switch mechanism is mounted above it upon the brass or other non-magnetic base member 24 attached to the core and cross members 26 and 28. The contact end of the switch is mounted upon the frame cross member 26 which forms one side of the circuit. Upon this cross member is attached in cantilever fashion a switch actuator consisting of a strip spring member 30 which extends rearwardly as shown. Other equivalent constructions having an inherent natural period of vibration may be used in place of the cantilever mounted strip spring. For example, I may employ a stiff strip member hinged at 26 and mounted at its opposite end upon a coiled or other suitable spring whereby the stiff strip vibrates when released after flexing the spring either in compression or tension. At the opposite end and bottom of said strip 30 is attached a magnetic armature 32 which is spaced from the core 22. The core is slotted at 34 under the armature to provide the leakage flux required for increasing the efficiency of the magnetic action on the armature. The cross member 28 carries a vertical adjusting stud 36 on which is supported the tension strip or follower 38 of the snap switch. As shown the stud has a necked portion 40 which fits into opening 41 (see Fig. 2) of the tension strip. The opposite free end of said tension member is attached to compression spring 44 and contact 46 is mounted thereon. The opposite end of compression spring 44 is pivoted in a notch 48 which is formed in a mounting member 49 on said cantilever spring strip 30. Notch 48 is normally (when said switch is not operating) above the tension center line of said tension strip 38 so that contact 46 is normally pressing against the lower stop 50. An important feature of this construction is that the bottom part of the bow of compression spring 44 constitutes a bumper and normally just touches spring strip 30 or lies in close proximity thereto. The lower stop 50 is an electrical contact which is insulated from the rest of the switch and frame except through contact 46 and either or both the connecting tension strip 38 and compression spring 44. The circuit from the source of electrical energy therefore passes through contacts 46 and 50, through the energizing coils and back to the source of energy. An upper stop 52 may be used to limit the upward movement of contact 46.

Since the contacts 46 and 50 are normally pressing against each other, the electromagnet 20 becomes energized when a source of energy is applied across the terminals of the primary circuit. The armature 32 is attracted by the energized electromagnet and is pulled downwardly thereby causing spring strip 30 to bend and be stressed with it. The mounting 49 thereon with notch 48 drops, and the pivot point of compression spring 44 thus drops below the tension center line of tension member 38. This forces the free end of the compression spring and contact 46 to move upwardly with a snap from contact 50, simultaneously breaking the electrical circuit and inducing a sufficient voltage in the secondary to cause a space discharge in a gas-filled tube (not shown), such as a neon tube, in circuit therewith. A distinct bright flash thereupon occurs in said tube. The electromagnet is deenergized immediately so that it releases armature 32. Spring strip 30 and armature 32 then spring upward and in so doing move the notched member 49 up to carry the pivot point of the compression spring 44 above the tension center line of the tension member 38 and to force the contact 46 to move with a snap action down against the stationary contact 50. Because of the inertia of the combined spring strip 30 and armature 32 this combination member does not come to rest immediately at the normal place but travels upwardly past the normal position. As it passes upwardly through the normal position, spring strip 30 comes in contact with the bottom of compression spring 44 and forces it upwardly, together with the contact 46, thereby lifting contact 46 off the stationary contact 50 to prevent the circuit from being closed for a sufficient length of time to energize the electromagnet and attract armature 32. Tests indicate that the circuit probably is closed for a comparatively minute length of time as the device passes through the normal position. After the vibrator, that is, combined spring 30 and armature 32, has reached the upper limit of movement due to its inertia, the flexed strip spring 30 causes this vibrating member to travel downward again. The weighted cantilever spring or actuator 30 continues for a time to vibrate with decreasing amplitude and in so vibrating beats against bowed compression spring 44 to lift the contact 46 repeatedly off the contact 50. During this oscillation of the cantilever actuator 30, contact 46 never lies in engagement with contact 50 long enough at one time to produce a distinct bright flash in a connected luminous tube (not shown). After the strip spring 30 is practically at rest in the normal position, contact 46 again touches contact 50 for a length of time which permits energization of the electromagnet sufficiently to cause armature 32 to be attracted to it.

During the oscillatory movement of contact 46 a series of low intensity flashes may be produced. The intensity of these dim flashes is largely dependent upon the gas used in the tube, some gases, such as argon, being more effective than neon for example, under these conditions. These low intensity flashes follow each other with sufficient rapidity that the tube glows as steadily as when a 60 cycle alternating current is applied to the tube. The tube may glow with sufficient intensity with certain gases so that it may be used for purposes where a continuous lower intensity illumination is desirable. The apparently continuous glow has, of course, a bright flash passing through it each time when the circuit is broken after contact 46 comes to rest against contact 50, but not during the period when the oscillations are diminishing in amplitude as explained previously. The characteristics of the device may be changed by changing the proportions and setting of the various parts as by raising or lowering the point of support 40 of the tension member 38 by means of stud 36. The interval between flashes may be varied by screwing stud 36 up or down to thereby vary the number of degrees above or below normal, or rest, position of the vibrator, which this vibrator must move in order to break the contact. The interval between flashes also may be decreased by damping directly the oscillations of vibrator 30, 32 by suitable means as by a stud 54 in cross member 28. The amplitude may be decreased sufficiently by these various means to cause the flasher to flash a considerable number of times per second. The construction described allows a variation in flasher speeds of from one every three seconds or greater to a "flutter."

Throughout the specification the directional terms horizontal, vertical, below, above, etc. are used for convenience, and to facilitate the description, and are not used in a restrictive sense. It is obvious from the description that a reference to a vertical movement refers to a generally up or down movement.

The invention is not limited to the specific construction herein shown and described by way of illustration and example, but rather contemplates variations thereof without departing from the invention as recited in the appended claims.

I claim:

1. In combination in a toggle snap switch, an actuator having a natural period of vibration and having also a normal rest position, a snap follower, an electric contact carried by said follower, a stationary contact adapted to cooperate with the contact carried by the follower, and spring means for operating the snap follower in response to an operation of said actuator, said follower and said spring means including a bumper portion which said actuator is adapted to engage to separate said contacts without snapping said switch, said elements being so constructed and arranged that said contacts normally engage each other, and that said actuator normally lies alongside said bumper portion without thereby holding said contacts out of engagement, said actuator being adapted to be moved out of its normal position and away from said bumper to snap said toggle switch to disengage said contacts, said actuator being further constructed and arranged so that when released, it first returns towards its normal position to snap said toggle switch to bring said contacts into engagement and then vibrates about its normal position, and in so vibrating beats against said bumper to separate said contacts without again snapping said toggle switch.

2. The combination of the immediately preceding claim wherein said follower comprises a tension member and said spring means comprises a thin leaf spring strip bowed in longitudinal compression adjacent said tension member, wherein said spring means connects said follower and said actuator, and wherein the convex face of said bowed spring strip constitutes said bumper portion.

3. In combination in a spring snap switch, a snapping element including a spring, an electric contact carried thereby, a second electric contact cooperating with the contact carried by the

snapping element to open and close a circuit, a vibratory actuator for said snapping element having a natural period of vibration and also a rest position, and constructed and arranged to actuate said snapping element with a snap action to separate said contacts when said actuator moves in one direction out of said rest position and means cooperating with said actuator to actuate said snap element to reclose said contacts when said actuator returns from said one direction to said rest position, said snapping element having a bumper portion that said actuator engages when moving out of said rest position in the opposite direction to separate said contacts without snapping said snap element.

MALCOLM W. EATON.