Sept. 29, 1925. 1,555,287

F. M. HOWE

COMPRESSING APPARATUS FOR SPRAYERS AND THE LIKE

Filed Jan. 19, 1923 4 Sheets-Sheet 1

Fig. 1.

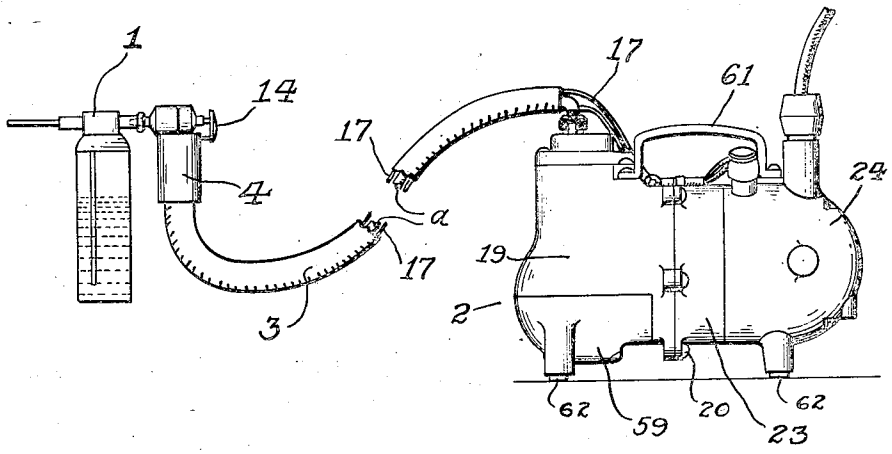

Fig. 2.

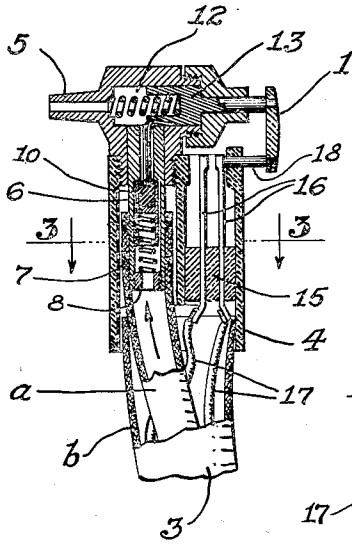

Fig. 3.

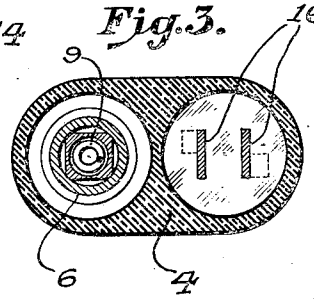

Fig. 4.

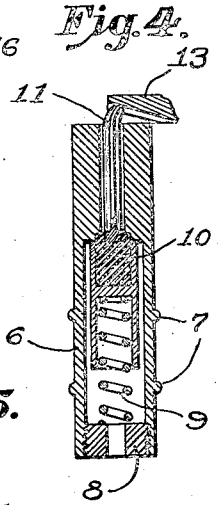

Fig. 6.



Fig. 5.



Inventor
FRANK MORGAN HOWE

By his Attorneys
Sheffield & Betts

Sept. 29, 1925. 1,555,287

F. M. HOWE

COMPRESSING APPARATUS FOR SPRAYERS AND THE LIKE

Filed Jan. 19, 1923 4 Sheets-Sheet 2

Fig. 7.

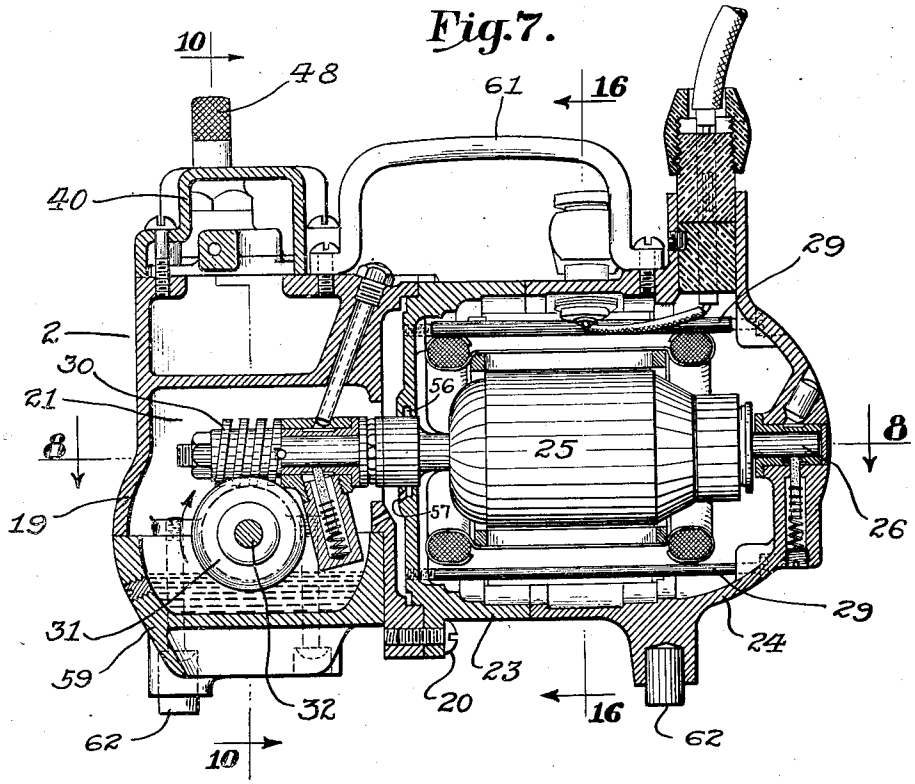

Fig. 8.

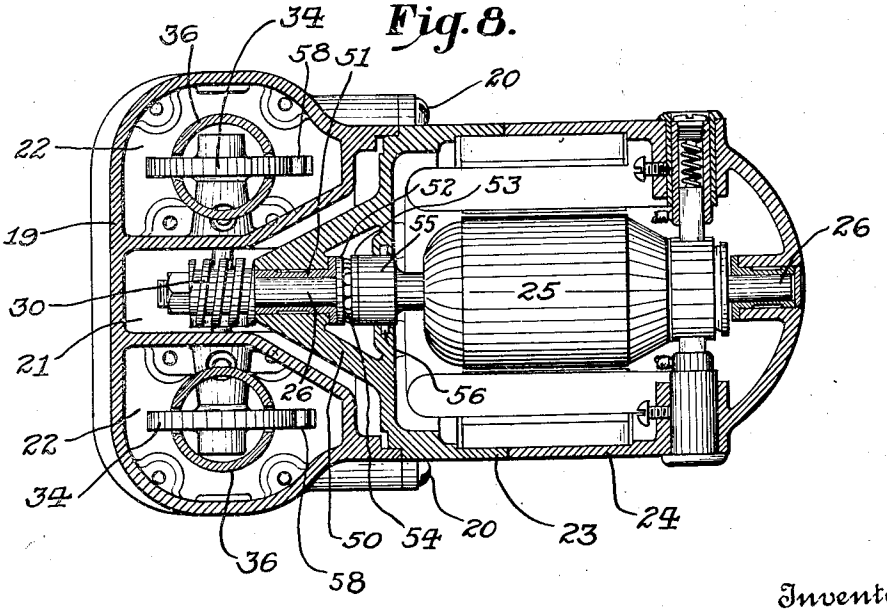

Inventor
FRANK MORGAN HOWE

By his Attorneys
Sheffield & Betts

Sept. 29, 1925. 1,555,287

F. M. HOWE

COMPRESSING APPARATUS FOR SPRAYERS AND THE LIKE

Filed Jan. 19, 1923 4 Sheets-Sheet 3

Fig. 9.

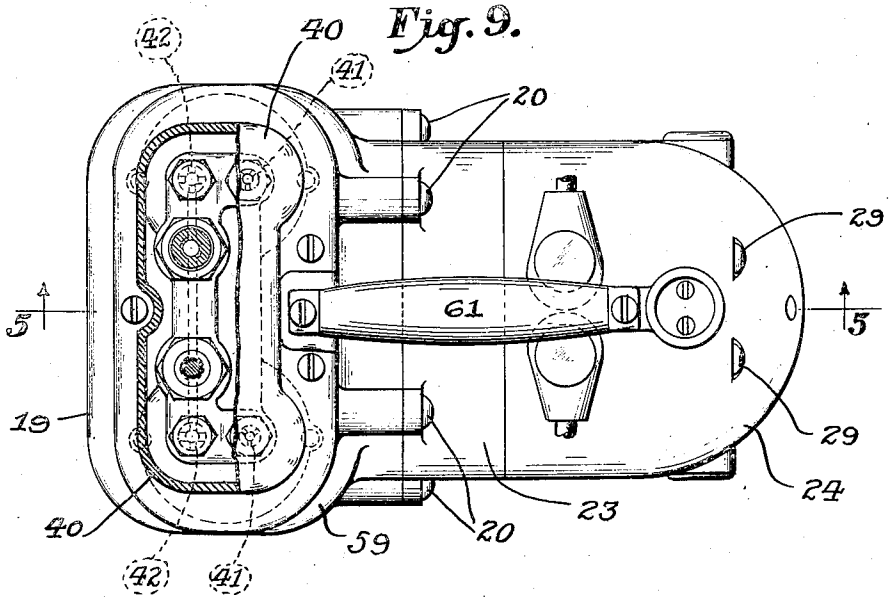

Fig. 10.

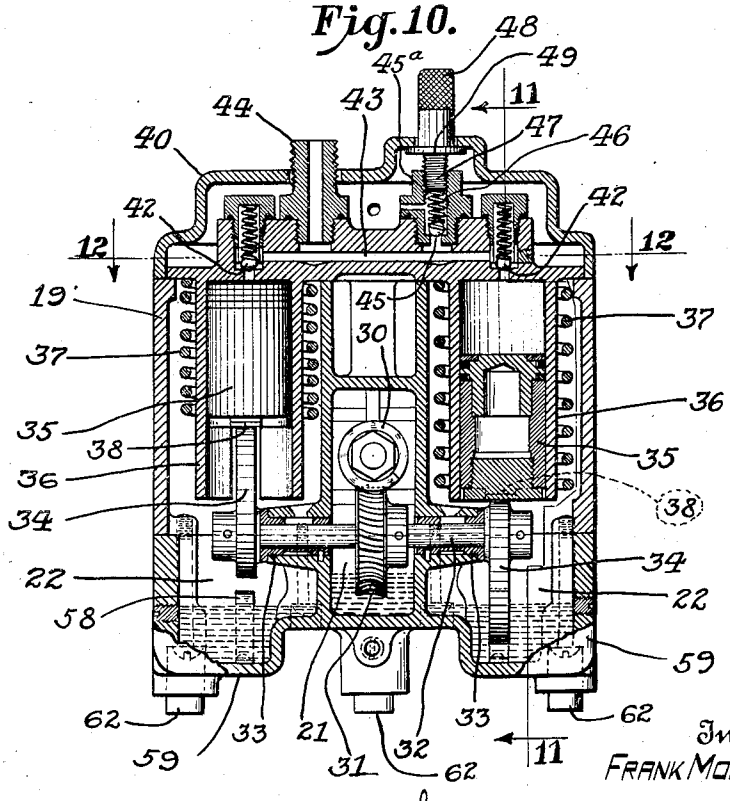

Inventor
FRANK MORGAN HOWE

By his Attorneys
Sheffield & Betts

Sept. 29, 1925. 1,555,287

F. M. HOWE

COMPRESSING APPARATUS FOR SPRAYERS AND THE LIKE

Filed Jan. 19, 1923 4 Sheets-Sheet 4

Fig. 11.

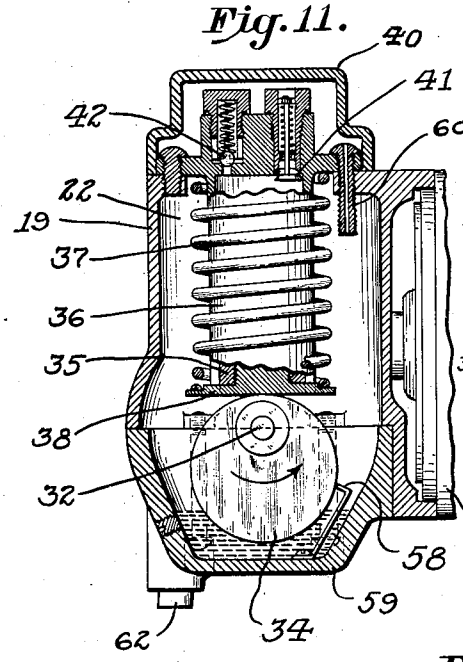

Fig. 12.

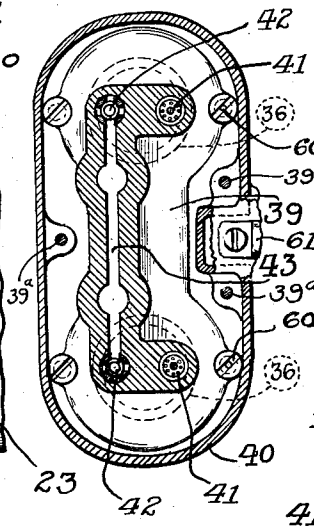

Fig. 14.

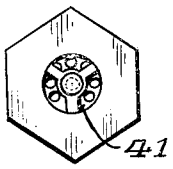

Fig. 13.

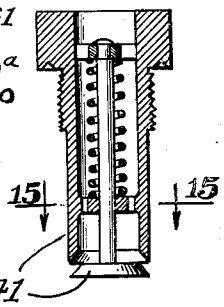

Fig. 15.

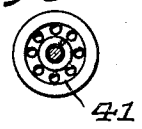

Fig. 16.

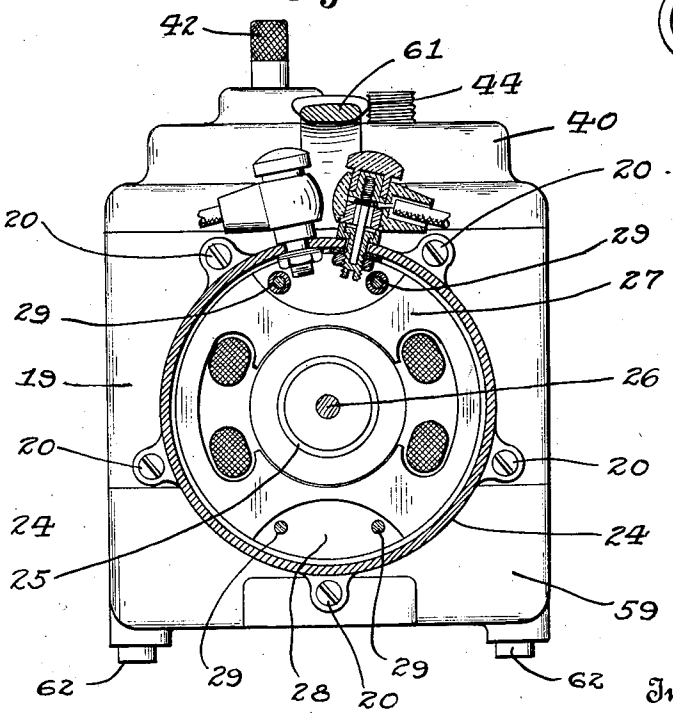

Inventor
FRANK MORGAN HOWE

By his Attorneys
Sheffield & Betts

Patented Sept. 29, 1925. 1,555,287

UNITED STATES PATENT OFFICE.

FRANK MORGAN HOWE, OF NEW YORK, N. Y.

COMPRESSING APPARATUS FOR SPRAYERS AND THE LIKE.

Application filed January 19, 1923. Serial No. 613,675.

To all whom it may concern:

Be it known that I, FRANK MORGAN HOWE, a citizen of the United States, residing in the borough of Manhattan, city, county, and State of New York, have invented certain new and useful Improvements in Compressing Apparatus for Sprayers and the like, of which the following is a full, clear, concise, and exact description.

My invention relates to compressing apparatus for supplying air for blow-piping, spraying or nebulizing purposes and the like. One of the objects of my invention is to provide means whereby the commonly used form of sprayer and nebulizer may be used without modification while avoiding the usual storage tank and connections thereto.

A second object of my invention is to provide a portable air compressing apparatus sufficiently compact to be conveniently placed in the workroom or office of a dentist, physician or other person, and of sufficient capacity to be connected direct to the ordinary type of sprayer, when used for nebulizing.

Further objects and advantages of my invention will be apparent to those skilled in the art from the following description taken in connection with the accompanying drawing in which—

Fig. 1 is a diagrammatic view of a spraying and nebulizing apparatus according to my invention;

Fig. 2 is a sectional detail of a combined air valve and electric switch according to my invention, and used in the apparatus illustrated in Fig. 1;

Fig. 3 is a section on line 3—3 of Fig. 2;

Figs. 4 and 5 illustrate details of the air valve appearing in Fig. 2;

Fig. 6 is a cross-section of a modified form of combined conductors and tube or conduit according to my invention;

Figs. 7 is a central vertical section through the motor air compressing unit appearing in Fig. 1;

Fig. 8 is a section on the line 8—8 of Fig. 7;

Fig. 9 is a plan view of the compressor illustrated in Figs. 1, 7 and 8, part being broken away;

Fig. 10 is a section on the line 10—10 of Fig. 7;

Fig. 11 is a section on the line 11—11 of Fig. 10;

Fig. 12 is a section on the line 12—12 of Fig. 10;

Figs. 13, 14 and 15 are detail views of the intake valve structure appearing in Fig. 11, and

Fig. 16 is a section on the line 16—16 of Fig. 7.

In the drawing, 1 indicates a sprayer of the well-known commercial form, the air for which is furnished, according to my invention, from an electrically driven air compressor 2. The ordinary commercial system involving sprayers similar to that indicated at 1 provides an air compressor delivering air to a reservoir connected to the sprayer by means of a system of pipes, including a flexible conduit terminating in a valve having a nozzle adapted to be used with any one of a number of sprayers. According to my invention, the reservoir and piping are eliminated, with the exception of a flexible tube or conduit connecting the air compressor unit directly with the valve, the circuit of the motor for driving the compressor being carried to the valve structure and a switch arranged in combination with the valve so that the air compressor is started and stopped substantially at the same time that the air valve is opened and closed when the sprayer is in use. In this way, necessity for the expensive reservoir and its system of piping is avoided, while I am nevertheless able, according to my invention, to provide a compact motor driven compressor unit sufficiently powerful to accomplish all the results in the way of spraying and nebulizing watery and oily liquids now accomplished by the expensive reservoir systems.

The flexible conduit between the compressor 2 and sprayer 1 is indicated at 3. Tubing 3 connects with the combined valve and switch structure or holder 4, according to my invention, structure 4 having a tapered nozzle 5 for delivering air to the sprayer, and designed, as has been customary in air valves of this type, to accommodate the variety of sprayers for different purposes. The end of the air conduit is passed over the lower end of the tube 6 within the structure 4, said tube having projections 7 thereon over which the con-

duit is passed, whereby the conduit is held securely in place. At the lower end of the tube 6 is a collar 8 against which bears a spring 9, the upper end of which presses against an air valve 10, the valve 10 seating against a shoulder within the tube 6 and having a stem 11 extending upwardly somewhat beyond the upper end of the tube 6. In the upper end of the structure 4 is a chamber 12 within which is a spring retracted plunger 13 adapted when pressed against its spring by the thumb or hand piece 14 to press down the stem 11 and open the valve 10 to permit air to pass through tube 6 into chamber 12 and out through nozzle 5 to the sprayer. Within the body of structure 4 and lying parallel to the valve structure just described is a switch comprising an insulating base 15 within which are mounted two spring contacts 16, 16 which are connected at their lower ends below the base 15 to wires 17, 17 forming part of the circuit for driving the motor of the compressor unit 2. The contacts 16 extend above the base 15 and are normally separated, but are pressed together at their upper ends by a plunger 18 connected to and operated by the thumb piece 14 previously mentioned, the valve 10 and switch contacts 16 being thus operated by the same member and so controlled by one hand of the user.

While I have shown an electric switch comprising contacts 16, and a valve 10 jointly operated by a thumb piece 14, I do not desire to be limited to this particular form of structure, since any other suitable type of electric switch may be employed, which may be operated independently of the valve 10 or jointly therewith, the primary object being to provide both the switch and valve controls on a single holder 4, so that the apparatus may be controlled by one hand of the user.

According to my invention, I prefer to lead the wires 17, 17 from the unit 2 to the valve structure 4 within the conduit 3, a convenient arrangement for this purpose being to provide the conduit structure with an inner tube *a* and an outer woven protective cover *b*, the tube *a* being connected directly to the part 6, as previously mentioned, and the wires 17, 17 being run between the tube *a* and the cover *b*.

The compressor unit 2 is in some aspects an improvement over the compressor unit disclosed in my prior application, Serial No. 518,003 filed Nov. 26, 1921.

Unit 2 comprises a compressor casing 19 connected to a motor casing by bolts 20, 20. The interior of casing 19 is divided into three chambers, one being a central chamber 21 for the gearing operated by the motor, and the other two chambers 22, 22 containing the air compressor cylinders and the operating mechanism therefor. I find it necessary to use much heavier oil for the motor driven gearing than for the cams directly associated with the compressing pistons, and hence have placed these different elements in separate oil-tight chambers so that there may be no leakage of oil from one chamber to the next.

The casing of the motor is divided into two parts 23 and 24 separated along a transverse vertical plane, as illustrated in Figs. 7, 8 and 9. Within the motor casing is an electric motor comprising an armature 25, an armature shaft 26, and pole pieces 27. The pole pieces are cut away, as illustrated at 28 (Fig. 16), and bolts 29, 29 for holding parts 23 and 24 of the motor casing together are passed through the apertures 28 in said pole pieces. The motor shaft 26 extends into the chamber 21 of the compressor casing and has a worm 30 thereon, worm 30 meshing with a worm wheel 31 on a cam shaft 32. Shaft 32, as best illustrated in Fig. 10, passes through the walls of the chamber 21 into chambers 22, there being oil-tight bearings 33, 33 at the points where this shaft passes through these walls to support the shaft and at the same time prevent the passage of oil from one chamber to the next. At each end of shaft 32 is a cam 34 for operating pistons 35, 35 in cylinders 36, 36, said pistons being driven in one direction by said cams and retracted by springs 37, 37, which surround the cylinders 36 and bear against shoes 38, 38 (Fig. 11) at the lower ends of said pistons.

Cylinders 36 are preferably formed integral, according to my invention, with a transverse casting 39 separate from the casing, member 39 extending across the upper ends of the chambers 22 and being held in place by bolts 39ª. At the upper ends of the cylinders are placed the usual intake valves 41, 41, and outlet valves 42, 42, the latter permitting the passage of air to duct 43 in the casting 39 from which connection may be made by a nipple 44 to conduit 3. I also provide means whereby an excess pressure of air in duct 43 may be relieved, this means comprising a valve casing 45ª connecting with the duct 43 and also with the interior of the cap 40, the latter being connected to the outer air. Within the casing 45ª is a valve 45 normally seated by a spring 46, the latter being held down by a threaded projection 47 at the lower end of a knurled piece 48. Piece 48 projects up through the cap 40 and bears a collar 49 designed to contact with the inner face of the cap 40 when the threaded part 47 is in the position to create the minimum desired tension in the spring 46.

The part 23 of the motor casing has a shouldered engagement with the compressor casing, and also has a bracket 50, preferably

integral with part 23, there being an aperture in the compressor casing leading into the gear chamber 21 into which bracket 50 projects. Within the bracket 50 is a bearing 51 for the shaft 26. On the inner face of the bracket 50 at the end of bearing 51 is a thrust bearing 52, there being a collar 53 on shaft 26. Preferably, I provide anti-friction balls 54 between the thrust member 52 and the collar 53. The shaft 26 has also an enlargement or hub 55 at the point where the shaft passes through the face of casing 23, hub 55 being designed to prevent passage of oil along the shaft to the armature. To further prevent the creeping of oil to the armature, I provide a circumferential groove 56 in the end of casing part 23, groove 56 surrounding the hub 55 and having an outlet at 57 (Fig. 7) to drain oil downwardly therefrom.

It will be seen, the armature shaft turns in such direction that bracket 50 is under tension, the actual stress from the worm gear thus being confined to the minimum length of the shaft 26. Moreover, the cams 34 oil the bearings 33 of shaft 32 and the bearing surfaces of pistons 35 and cylinders 36 by splashing. However, I find it preferable to provide spring members 58 in chambers 23 which press slightly against the cams 34 to prevent excessive splashing.

The lower portions of chambers 21 and 22 are formed in a base piece or casting 59 normally held in place by removable bolts permitting the ready access to the gearing and other mechanism in these chambers. I find, moreover, that special means must be provided to prevent the oil in chambers 22, 22 being carried up above the pistons 35 on the suction stroke of the pistons and thereafter being forced out with the pressure air. I have successfully avoided this difficulty by providing ventilating means for chambers 22, 22 which pump air to these chambers while preventing loss of lubricant. A satisfactory arrangement for this purpose is illustrated in Fig. 11 where 60 is a screw running down from under the cap 40 within one of the chambers 22, screw 60 having a small vent therethrough but extending far enough into chamber 22 so that no oil will escape therefrom in case the compressor unit is accidentally inverted.

Wires leading to the motor are carried through the motor casing by convenient terminal members clearly indicated in Figs. 7 and 16, and a handle 61 is also attached to the unit whereby it may be conveniently handled. Suitable legs whereby the compressor unit may rest on a shelf or other suitable support are indicated at 62, 62.

While I prefer to form the conduit 3, as illustrated in Figs. 1 and 2, with a woven protective cover *b*, I also use a conduit 3′, as indicated in Fig. 6, in which the wall of the conduit proper is sufficiently thick to enable the wires 17 to be embedded therein.

It will be apparent to those skilled in the art that the air compressing unit disclosed herein is capable of supplying air not only for spraying and nebulizing by the means ordinarily used for these purposes and without an intermediate storage tank, but is also adapted to supply air for blow pipe and other work.

Having thus described my invention, I claim:

1. In an apparatus of the class described, the combination of an air pump, an electric motor for driving said pump, a holder adapted to be held in the hand having air connections with said pump, a valve for controlling the air to said holder, and a switch for controlling the current to said motor both carried by said holder, and means on said holder whereby said valve and switch are operated.

2. Compressing apparatus for sprayers and the like comprising an air pump, an electric motor for driving said pump, a structure adapted to be held in the hand having flexible connections with said pump integral therewith, a valve for controlling the air to said structure, and a switch for controlling the current to said motor both carried by said structure, and means whereby said valve and switch are operated, said means being arranged for operation by the hand holding said structure.

3. In an apparatus of the class described, the combination of an air pump, an electric motor for driving said pump, a structure adapted to be held in the hand having connections with said pump, a valve for controlling the air to said structure, and a switch for controlling the current to said motor both carried by said structure, and means whereby said valve and switch are operated, said means being arranged for operation by the thumb of the hand holding said structure.

4. In an apparatus of the class described, the combination of an air pump, an electric motor for driving said pump, a holder adapted to be held in the hand having air connections with said pump, a valve for controlling the air to said holder and a switch for controlling the current to said motor both carried by said holder, and means on said holder whereby said valve and switch are operated, said air connections comprising a conduit having a body and an outer protective covering, wires running from said motor to said switch and carried between said covering and the body of the conduit.

5. In a compressing unit for furnishing air for sprayers and the like, the combination of an air compressor cylinder having a stemless piston therein, a cam for operating said piston in direct contact there-

with, a shaft for said cam, a motor, a worm and gear drive between said motor and said shaft, and separate oil chambers enclosing said cam and drive, said shaft having a bearing in the wall between said chambers.

6. In a compressing unit for furnishing air for sprayers and the like, the combination of an air compressor cylinder, having a stemless piston therein, a cam for operating said piston in direct contact therewith, a shaft for said cam, a motor, a worm and gear drive between said motor and said shaft, and separate oil chambers enclosing said cam and drive, said shaft having a bearing in the wall between said chambers, said bearing being adapted and arranged to be oiled by the splash from said cam.

7. In an apparatus of the class described, the combination of an air compressor comprising a piston cylinder, a piston in said cylinder, driving means for said piston, an air chamber surrounding one end of said cylinder and said driving means, and having communication with said end of said cylinder, and means for ventilating said chamber and adapted to prevent substantial escape of oil therefrom.

8. In a motor driven compressor unit, a compressor casing, a motor casing affixed thereto, said compressor casing having three chambers therein in alignment, the central one of said chambers having an aperture in its side, said motor casing having a bracket thereon projecting through said aperture into said central chamber, and a bearing for the shaft of said motor in said bracket.

9. In a motor driven compressor unit, a compressor casing, a motor casing affixed thereto, said compressor casing having three chambers therein in alignment, the central one of said chambers having an aperture in its side, said motor casing having a bracket thereon projecting through said aperture into said central chamber, a bearing for the shaft of said motor in said bracket, and a thrust bearing on the inner face of the bracket.

10. In an apparatus of the class described the combination of an air pump, an electric motor for driving said pump, a switch for controlling said motor, a holder adapted to be held in the hand, having air connections with said pump, and a valve for controlling the air to said holder, said switch and valve both being supported by said holder.

11. In an apparatus of the class described, the combination of an air pump, an electric motor for driving said pump, a switch for controlling said motor, a holder adapted to be held in the hand, a conduit for leading air from said pump to said holder, and a valve for controlling the passage of air from said conduit to said holder said switch and said valve being both mounted near the end of said conduit.

12. In an apparatus of the class described, the combination of an air pump, an electric motor for driving said pump, an air using device, a conduit leading from said pump to said device, and wires forming part of the circuit of said motor embedded in the wall structure of said conduit.

FRANK MORGAN HOWE.