United States Patent [19]

Hughes, Jr.

[11] **Patent Number: Des. 286,344**

[45] **Date of Patent: ** Oct. 28, 1986**

[54] **SERVING TRAY FOR AN AUTOMOBILE**

[76] Inventor: **James E. Hughes, Jr.**, 10519 Broadleaf Dr., Largo, Md. 20772

[**] Term: **14 Years**

[21] Appl. No.: **618,910**

[22] Filed: **Jun. 8, 1984**

[52] **U.S. Cl.** **D3/40**; D7/70; D8/371

[58] **Field of Search** D7/70, 71, 45, 19, 37; D3/74, 40; 296/37.8; 108/27, 47, 97; 211/88; D6/567, 574; D8/371, 380, 381

[56] **References Cited**

U.S. PATENT DOCUMENTS

D. 204,999	6/1966	Edwards	D3/40
D. 260,832	9/1981	Verdesca et al.	D3/40 X
1,921,462	8/1933	Graham	211/88
1,974,213	9/1934	Gilbert	211/88
3,194,186	7/1965	Brown et al.	108/46
3,202,116	8/1965	Wilson	108/46
3,267,880	8/1966	Bedol	108/46
3,543,311	12/1970	Richard	5/118
3,712,235	1/1973	Russ	108/46
3,838,841	10/1974	Cadman	108/46

FOREIGN PATENT DOCUMENTS

322650	12/1929	United Kingdom	108/47
876088	8/1961	United Kingdom .	

Primary Examiner—Winifred E. Herrmann
Attorney, Agent, or Firm—Donald A. Kettlestrings

[57] **CLAIM**

The ornamental design for a serving tray for an automobile, as shown and described.

DESCRIPTION

FIG. **1** is a top plan view of a serving tray for an automobile showing my new design;
FIG. **2** is a side elevational view thereof;
FIG. **3** is a bottom plan view thereof;
FIG. **4** is a front elevational view thereof;
FIG. **5** is a rear elevational view thereof; and
FIG. **6** is an exploded top perspective view thereof.

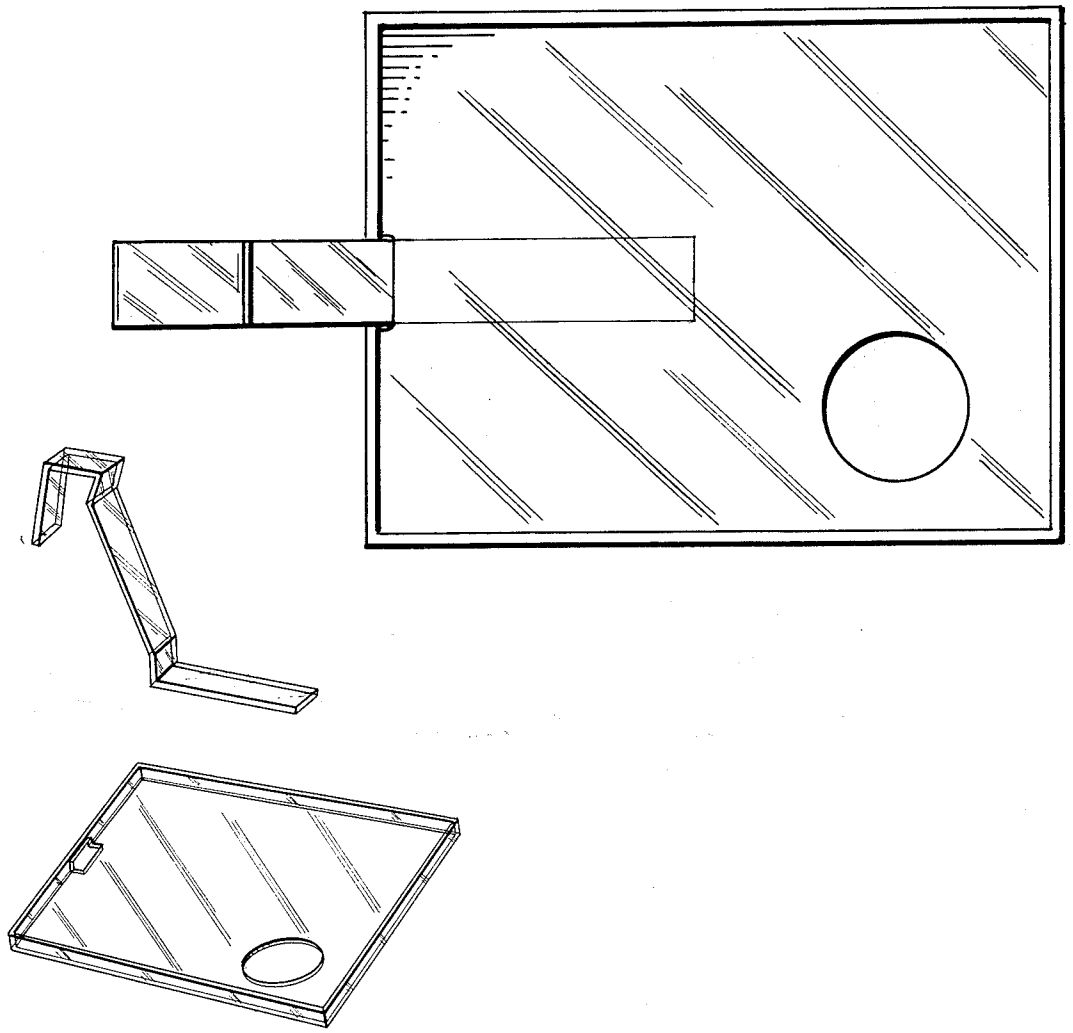

Fig. 1.

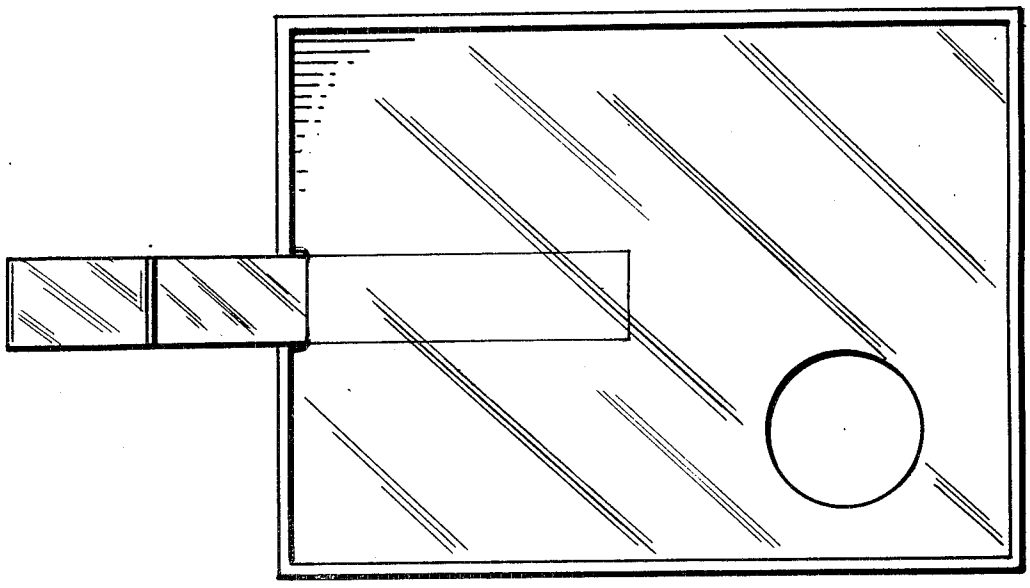

Fig. 2.

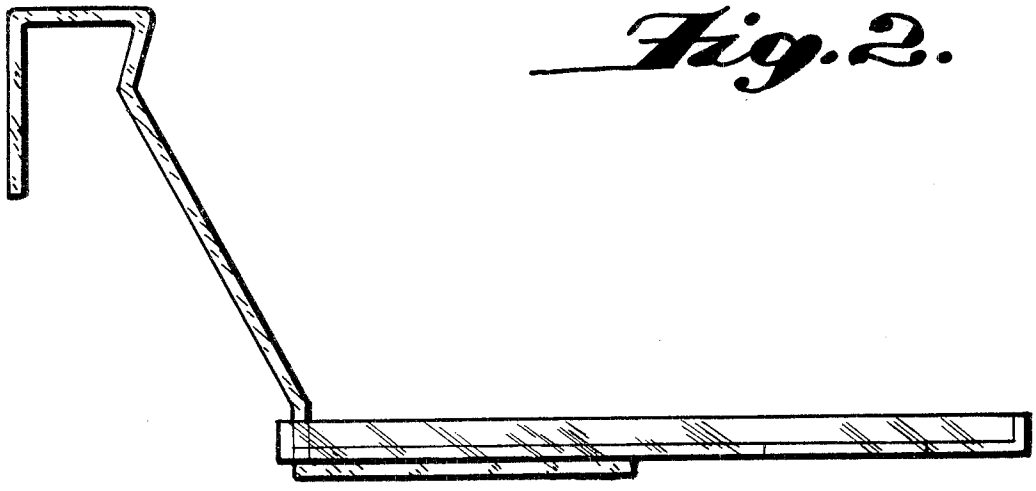

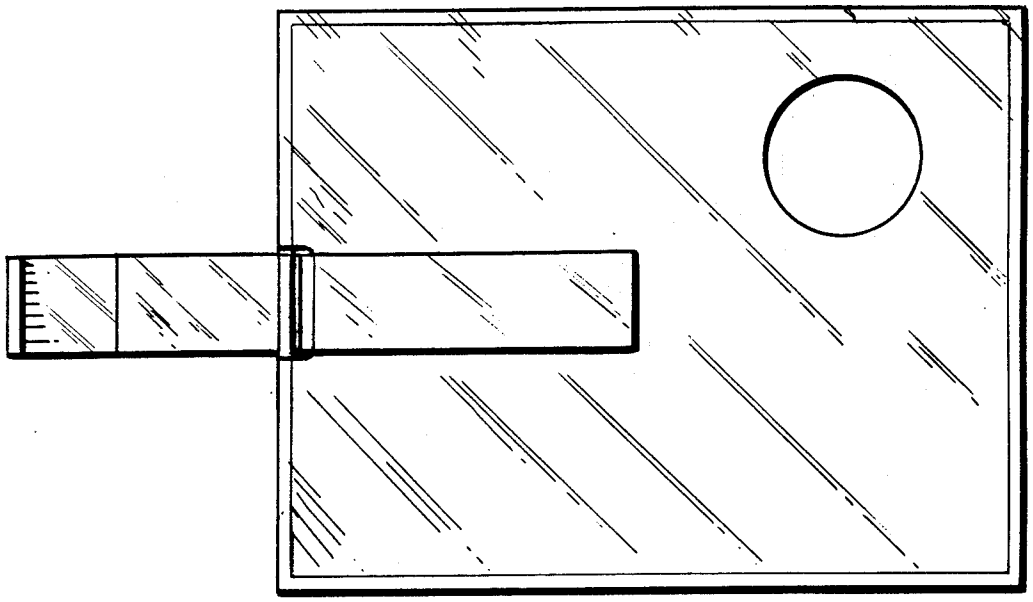

Fig. 3.

Fig. 4.

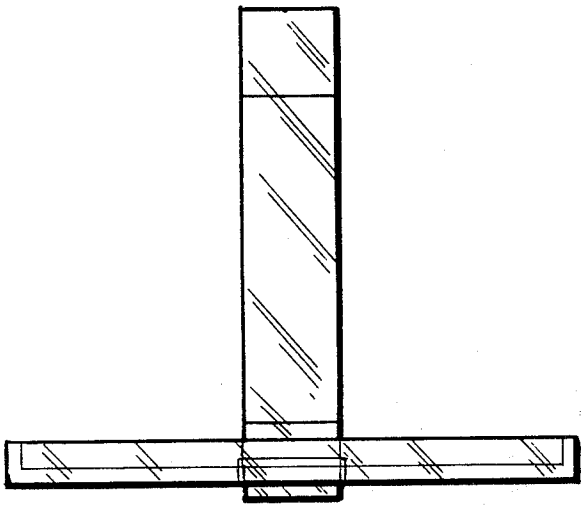

Fig. 5.

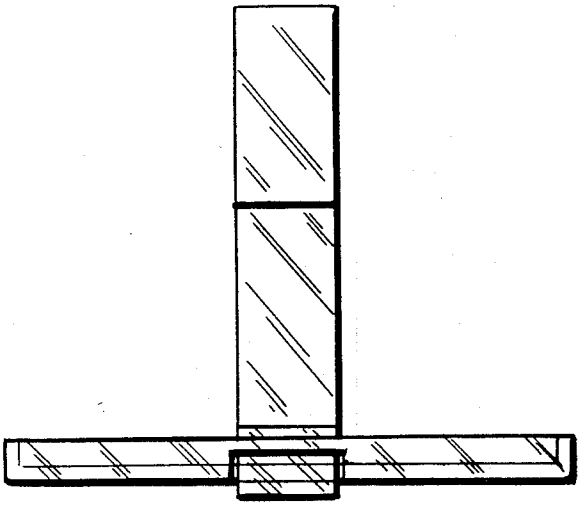

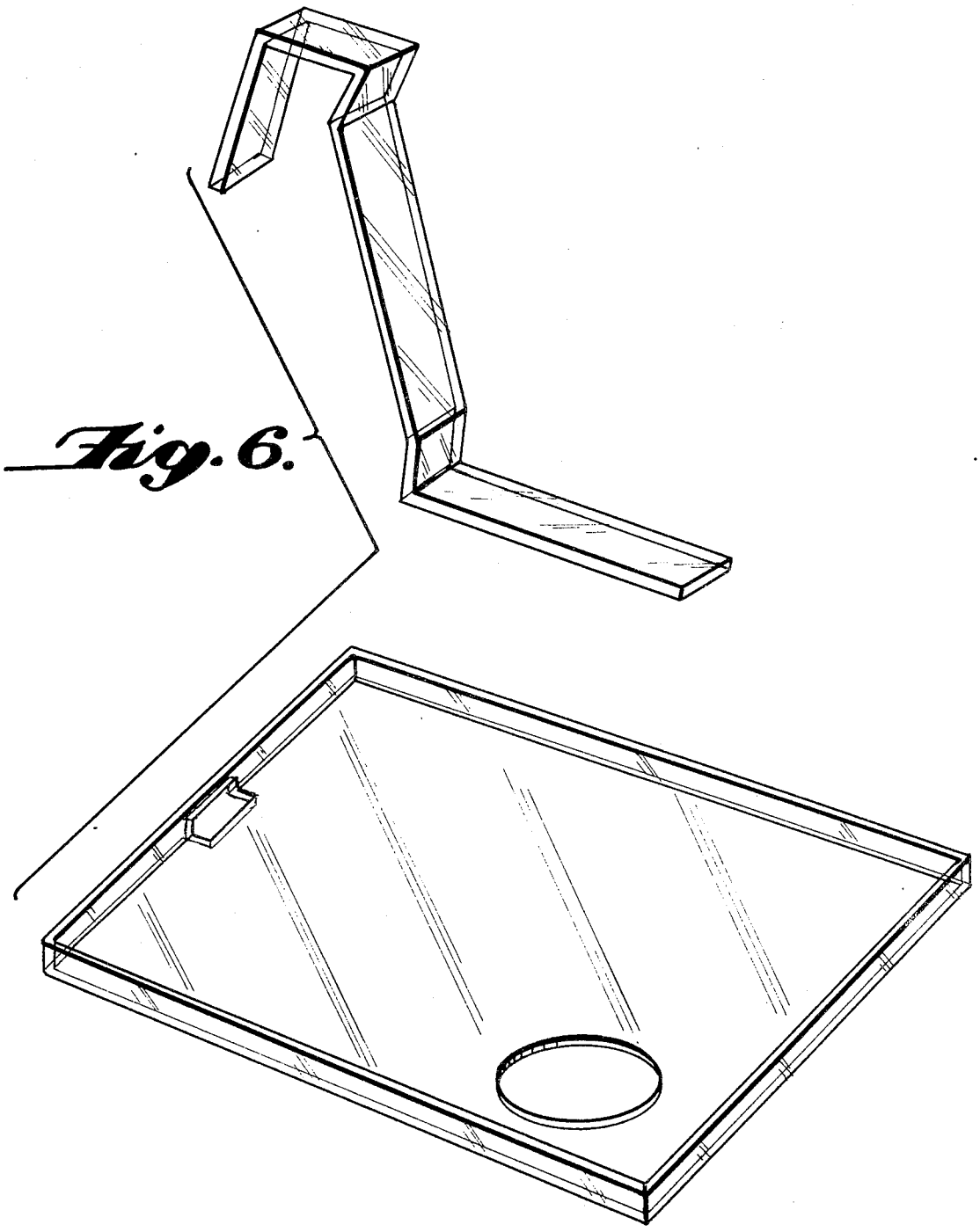

Fig. 6.